THE DATASHEET OF

LTC1562IG#TRPBF

www.win-source.net 0086-755-83957316

Very Low Noise, Low Distortion Active RC Quad Universal Filter

FEATURES

- Continuous Time—No Clock
- Four 2nd Order Filter Sections, 10kHz to 150kHz Center Frequency
- ±0.5% Typical Center Frequency Accuracy
- ±0.3% Typical Center Frequency Accuracy (A Grade)
- Wide Variety of Response Shapes
- Lowpass, Bandpass and Highpass Responses
- 103dB Typical S/N, ±5V Supply (Q = 1)
- 97dB Typical S/N, Single 5V Supply (Q = 1)
- 96dB Typical S/(N + THD) at ±5V Supply, 20kHz Input
- Rail-to-Rail Input and Output Voltages
- DC Accurate to 3mV (Typ)
- "Zero-Power" Shutdown Mode
- Single or Dual Supply, 5V to 10V Total
- Resistor-Programmable f_0, Q, Gain

APPLICATIONS

- High Resolution Systems (14 Bits to 18 Bits)
- Antialiasing/Reconstruction Filters
- Data Communications, Equalizers
- Dual or I-and-Q Channels (Two Matched 4th Order Filters in One Package)
- Linear Phase Filtering
- Replacing LC Filter Modules

DESCRIPTION

The LTC®1562 is a low noise, low distortion continuous-time filter with rail-to-rail inputs and outputs, optimized for a center frequency (f_0) of 10kHz to 150kHz. Unlike most monolithic filters, no clock is needed. Four independent 2nd order filter blocks can be cascaded in any combination, such as one 8th order or two 4th order filters. Each block's response is programmed with three external resistors for center frequency, Q and gain, using simple design formulas. Each 2nd order block provides lowpass and bandpass outputs. Highpass response is available if an external capacitor replaces one of the resistors. Allpass, notch and elliptic responses can also be realized.

The LTC1562 is designed for applications where dynamic range is important. For example, by cascading 2nd order sections in pairs, the user can configure the IC as a dual 4th order Butterworth lowpass filter with 94dB signal-to-noise ratio from a single 5V power supply. Low level signals can exploit the built-in gain capability of the LTC1562. Varying the gain of a section can achieve a dynamic range as high as 118dB with a ±5V supply.

Other cutoff frequency ranges can be provided upon request. Please contact LTC Marketing.

LT, LTC and LT are registered trademarks of Linear Technology Corporation.

TYPICAL APPLICATION

Dual 4th Order 100kHz Butterworth Lowpass Filter

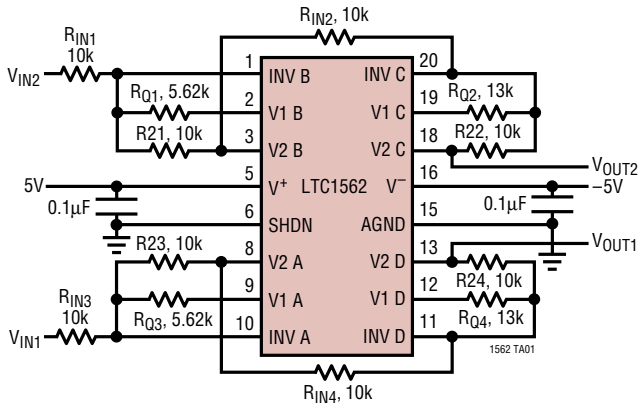

SCHEMATIC INCLUDES PIN NUMBERS FOR 20-PIN PACKAGE. PINS 4, 7, 14, 17 (NOT SHOWN) ALSO CONNECT TO V⁻

SEE TYPICAL APPLICATIONS FOR OTHER CUTOFF FREQUENCIES

DC ACCURATE, NONINVERTING, UNITY-GAIN, RAIL-TO-RAIL INPUT AND OUTPUTS. PEAK SNR ≈ 100dB WITH ±5V SUPPLIES

Amplitude Response

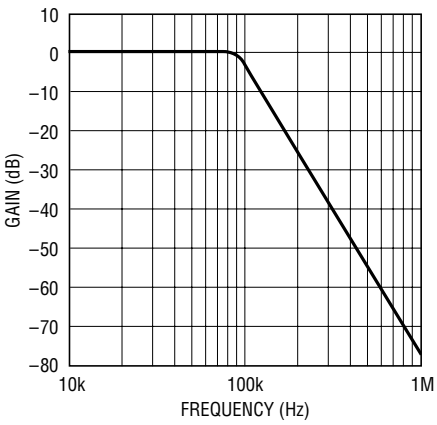

ABSOLUTE MAXIMUM RATINGS (Note 1)

Total Supply Voltage (V^+ to V^-) 11V
Maximum Input Voltage
at Any Pin ..... $(V^- - 0.3V) \leq V \leq (V^+ + 0.3V)$
Storage Temperature Range ..... –65°C to 150°C

Operating Temperature Range
LTC1562C ..... 0°C to 70°C
LTC1562I ..... –40°C to 85°C
Lead Temperature (Soldering, 10 sec) ..... 300°C

PACKAGE/ORDER INFORMATION

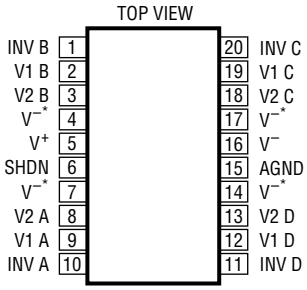

G PACKAGE
20-LEAD PLASTIC SSOP

*G PACKAGE PINS 4, 7, 14, 17 ARE SUBSTRATE/SHIELD CONNECTIONS AND MUST BE TIED TO V^-

T_{JMAX} = 150°C, θ_{JA} = 136°C/W

ORDER PART NUMBER

LTC1562CG
LTC1562ACG
LTC1562IG
LTC1562AIG

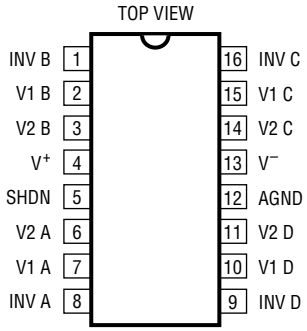

N PACKAGE
16-LEAD PDIP

T_{JMAX} = 150°C, θ_{JA} = 90°C/W

ORDER PART NUMBER

LTC1562CN

Consult LTC Marketing for parts specified with wider operating temperature ranges.

ELECTRICAL CHARACTERISTICS

The ● denotes the specifications that apply over the full operating temperature range, otherwise specifications are at T_A = 25°C. V_S = ±5V, outputs unloaded, SHDN pin to logic "low", unless otherwise noted. AC specs are for a single 2nd order section, R_{IN} = R2 = R_Q =10k ±0.1%, f_O = 100kHz, unless noted.

SYMBOL	PARAMETER	CONDITIONS		MIN	TYP	MAX	UNITS
V_S	Total Supply Voltage			4.75		10.5	V
I_S	Supply Current	V_S = ±2.375V, R_L = 5k, C_L = 30pF, Outputs at 0V V_S = ±5V, R_L = 5k, C_L = 30pF, Outputs at 0V			17.3 19	19.5 21.5	mA mA
		V_S = ±2.375V, R_L = 5k, C_L = 30pF, Outputs at 0V V_S = ±5V, R_L = 5k, C_L = 30pF, Outputs at 0V	● ●			23.5 25.5	mA mA
	Output Voltage Swing	V_S = ±2.375V, R_L = 5k, C_L = 30pF V_S = ±5V, R_L = 5k, C_L = 30pF	● ●	4.0 9.3	4.6 9.8		V_{P-P} V_{P-P}
V_{OS}	DC Offset Magnitude, V2 Outputs (Lowpass Response)	V_S = ±2.375V, Input at AGND Voltage V_S = ±5V, Input at AGND Voltage	● ●		3 3	15 15	mV mV
	DC AGND Reference Point	V_S = Single 5V Supply			2.5		V
	Center Frequency (f_O) Error (Note 2) LTC1562 (SSOP) LTC1562A (SSOP) LTC1562 (PDIP)	 V_S = ±5V, V2 Output Has R_L = 5k, C_L = 30pF V_S = ±5V, V2 Output Has R_L = 5k, C_L = 30pF V_S = ±5V, V2 Output Has R_L = 5k, C_L = 30pF			 0.5 0.3 0.6	 1.0 0.6 1.5	 % % %
H_L	LP Passband Gain (V2 Output)	V_S = ±2.375V, f_{IN} = 10kHz, V2 Output Has R_L = 5k, C_L = 30pF	●	0	+0.05	+0.1	dB
H_B	BP Passband Gain (V1 Output)	V_S = ±2.375V, f_{IN} = f_O, V2 Output Has R_L = 5k, C_L = 30pF	●		+0.2	+0.5	dB

ELECTRICAL CHARACTERISTICS

The ● denotes the specifications that apply over the full operating temperature range, otherwise specifications are at T_A = 25°C. V_S = ±5V, outputs unloaded, SHDN pin to logic "low", unless otherwise noted. AC specs are for a single 2nd order section, R_{IN} = R2 = R_Q =10k ±0.1%, f_0 = 100kHz, unless noted.

SYMBOL	PARAMETER	CONDITIONS	MIN	TYP	MAX	UNITS
	Q Error	V_S = ±2.375V, LP Output Has R_L = 5k, C_L = 30pF		+3		%
	Wideband Output Noise, Lowpass Response (V2 Output)	V_S = ±2.375V, BW = 200kHz, Input AC GND V_S = ±5V, BW = 200kHz, Input AC GND		24 24		μV_{RMS} μV_{RMS}
	Input-Referred Noise, Gain = 100	BW = 200kHz, f_0 = 100kHz, Q = 1, Input AC GND		4.5		μV_{RMS}
THD	Total Harmonic Distortion, Lowpass Response (V2 Output)	f_{IN} = 20kHz, 2.8V_{P-P}, V1 and V2 Outputs Have R_L = 5k, C_L = 30pF		–96		dB
		f_{IN} = 100kHz, 2.8V_{P-P}, V1 and V2 Outputs Have R_L = 5k, C_L = 30pF		–78		dB
	Shutdown Supply Current	SHDN Pin to V^+ SHDN Pin to V^+, V_S = ±2.375V		1.5 1.0	15	µA µA
	Shutdown-Input Logic Threshold			2.5		V
	Shutdown-Input Bias Current	SHDN Pin to 0V		–10	–20	µA
	Shutdown Delay	SHDN Pin Steps from 0V to V^+		20		µs
	Shutdown Recovery Delay	SHDN Pin Steps from V^+ to 0V		100		µs
	Inverting Input Bias Current, Each Biquad			5		pA

Note 1: Absolute Maximum Ratings are those values beyond which the life of a device may be impaired.

Note 2: f_0 change from ±5V to ±2.375 supplies is –0.15% typical, f_0 temperature coefficient, –40°C to 85°C, is –25ppm/°C typical.

TYPICAL PERFORMANCE CHARACTERISTICS

f_0 Error vs Nominal f_0 (V_S = ±5V)

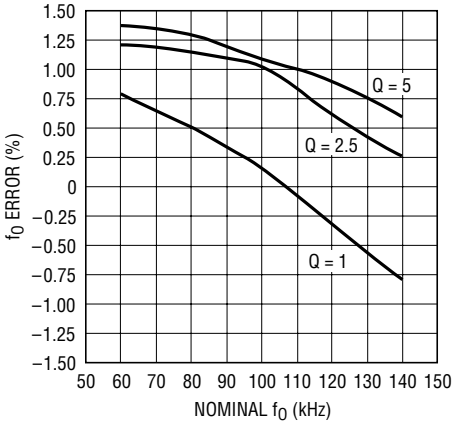

f_0 Error vs Nominal f_0 (V_S = ±2.5V)

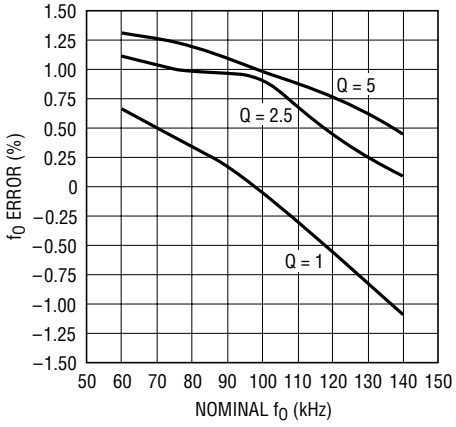

Q Error vs Nominal f_0 (V_S = ±5V)

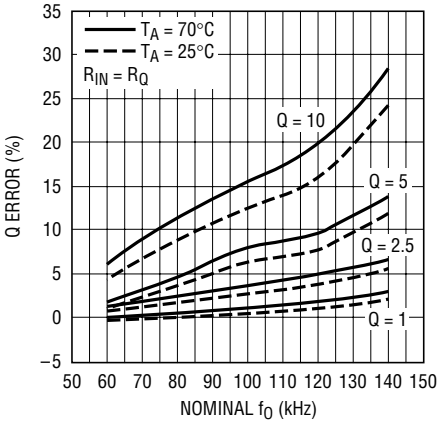

TYPICAL PERFORMANCE CHARACTERISTICS

Q Error vs Nominal f_0 (V_S = ±2.5V)

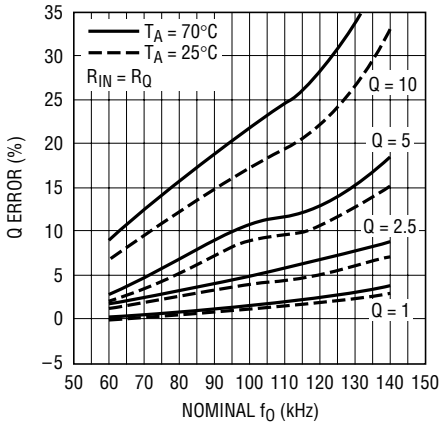

Peak BP Gain vs Nominal f_0 (V_S = ±5V) (Figure 3, V1 Output)

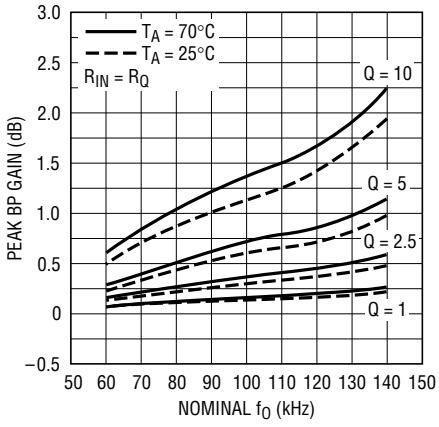

Peak BP Gain vs Nominal f_0 (V_S = ±2.5V) (Figure 3, V1 Output)

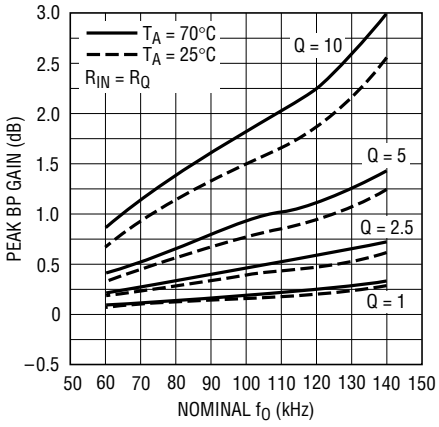

LP Noise vs Nominal f_0 (V_S = ±5V, 25°C) (Figure 3, V2 Output) (R_{IN} = R2)

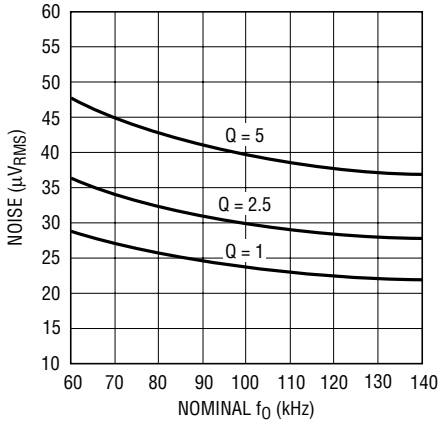

BP Noise vs Nominal f_0 (V_S = ±5V, 25°C) (Figure 3, V1 Output) (R_{IN} = R_Q)

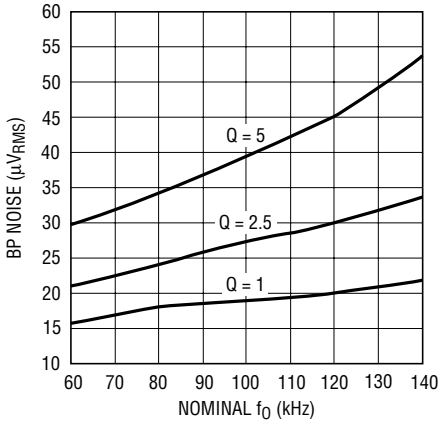

Distortion vs External Load Resistance (V_S = ±5V, 25°C) (Figure 8)

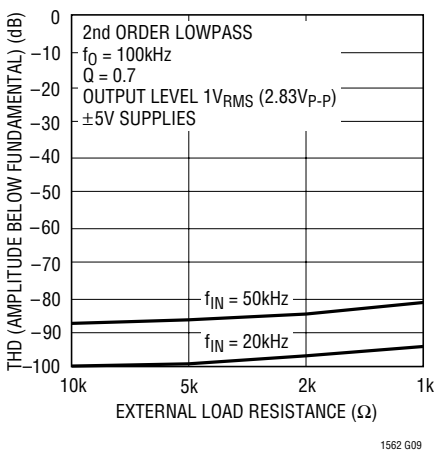

PIN FUNCTIONS

Power Supply Pins: The V^+ and V^- pins should be bypassed with 0.1μF capacitors to an adequate analog ground or ground plane. These capacitors should be connected as closely as possible to the supply pins. In the 20-lead SSOP package, the additional pins 4, 7, 14 and 17 are internally connected to V^- (Pin 16) and should also be tied to the same point as Pin 16 for best shielding. Low noise linear supplies are recommended. Switching supplies are not recommended as they will lower the filter dynamic range.

Analog Ground (AGND): The AGND pin is the midpoint of an internal resistive voltage divider, developing a potential halfway between the V^+ and V^- pins, with an equivalent series resistance nominally 7kΩ. This serves as an internal ground reference. Filter performance will reflect the quality of the analog signal ground and an analog ground plane surrounding the package is recommended. The analog ground plane should be connected to any digital ground at a single point. For dual supply operation, the AGND pin should be connected to the ground plane

PIN FUNCTIONS

(Figure 1). For single supply operation, the AGND pin should be bypassed to the ground plane with at least a 0.1µF capacitor (at least 1µF for best AC performance) (Figure 2). These figures show 20-pin package connections. The same principles apply to the 16-pin package with allowance for its different pin numbers. The 16-pin package does not have the four substrate pins (Pins 4, 7, 14, 17 in the 20-pin package).

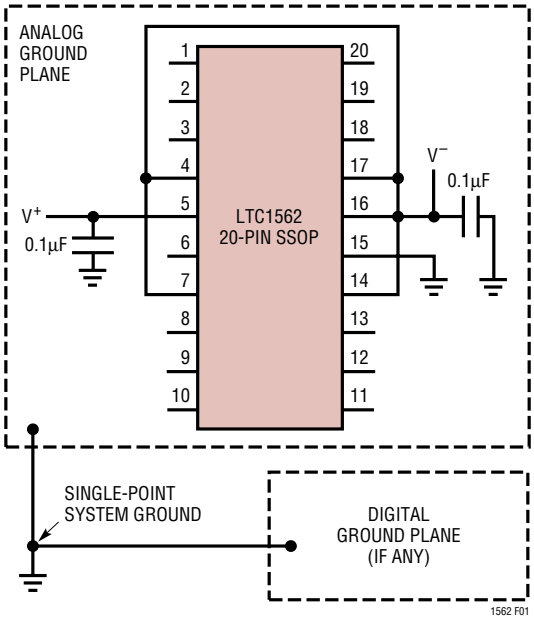

Figure 1. Dual Supply Ground Plane Connection (Including Substrate Pins 4, 7, 14, 17)

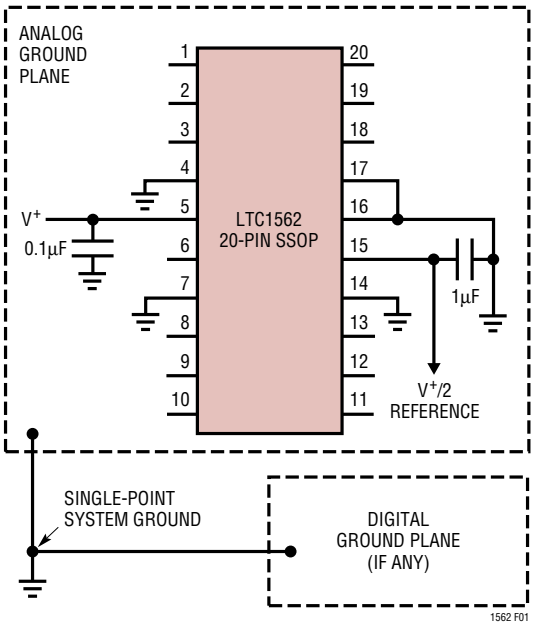

Figure 2. Single Supply Ground Plane Connection (Including Substrate Pins 4, 7, 14, 17)

Shutdown (SHDN): When the SHDN input goes high or is open-circuited, the LTC1562 enters a "zero-power" shutdown state and only junction leakage currents flow. The AGND pin and the amplifier outputs (see Figure 3) assume a high impedance state and the amplifiers effectively disappear from the circuit. (If an input signal is applied to a complete filter circuit while the LTC1562 is in shutdown, some signal will normally flow to the output through passive components around the inactive op amps.)

A small pull-up current source at the SHDN input *defaults the LTC1562 to the shutdown state if the SHDN pin is left floating*. Therefore, the user *must* connect the SHDN pin to a logic "low" (0V for ±5V supplies, V^- for 5V total supply) for normal operation of the LTC1562. (This convention permits true "zero-power" shutdown since not even the driving logic must deliver current while the part is in shutdown.) With a single supply voltage, use V^- for logic "low"—do not connect SHDN to the AGND pin.

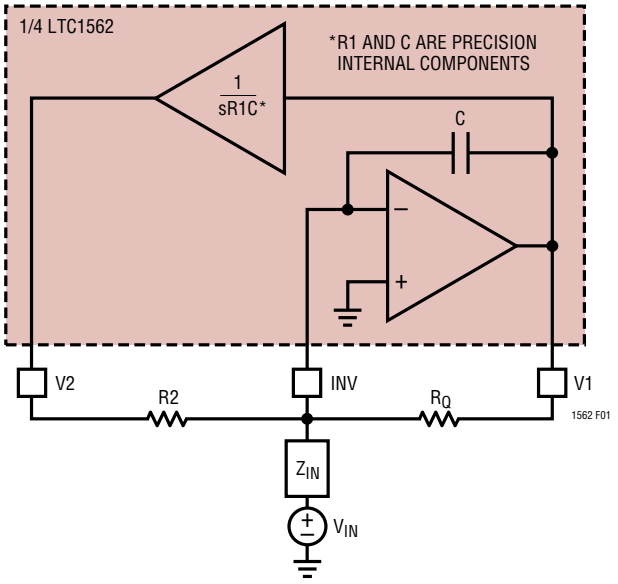

Z_{IN} TYPE	RESPONSE AT V1	RESPONSE AT V2
R	BANDPASS	LOWPASS
C	HIGHPASS	BANDPASS

IN EACH CASE,

$$f_O = (100kHz)\left(\sqrt{\frac{10k\Omega}{R2}}\right)$$

$$Q = \frac{RQ}{R2}\left(\frac{100kHz}{f_O}\right)$$

Figure 3. Equivalent Circuit of a Single 2nd Order Section (Inside Dashed Line) Shown in Typical Connection. Form of Z_{IN} Determines Response Types at the Two Outputs (See Table)

PIN FUNCTIONS

INV A, INV B, INV C, INV D: Each of the INV pins is a virtual-ground summing point for the corresponding 2nd order section. For each section, external components Z_{IN}, R2, R_Q connect to the INV pin as shown in Figure 3 and described further in the Applications Information. Note that the INV pins are sensitive internal nodes of the filter and will readily receive any unintended signals that are capacitively coupled into them. Capacitance to the INV nodes will also affect the frequency response of the filter sections. For these reasons, printed circuit connections to the INV pins must be kept as short as possible, less than one inch (2.5cm) total and surrounded by a ground plane.

V1 A, V1 B, V1 C, V1 D: Output Pins. Provide a bandpass, highpass or other response depending on external circuitry (see Applications Information section). Each V1 pin also connects to the R_Q resistor of the corresponding 2nd order filter section (see Figure 3 and Applications Information). Each output is designed to drive a nominal net load of 5kΩ and 30pF, which includes the loading due to the external R_Q. Distortion performance improves when the outputs are loaded as lightly as possible. Some earlier literature refers to these outputs as "BP" rather than V1.

V2 A, V2 B, V2 C, V2 D: Output Pins. Provide a lowpass, bandpass or other response depending on external circuitry (see Applications Information section). Each V2 pin also connects to the R2 resistor of the corresponding 2nd order filter section (see Figure 3 and Applications Information). Each output is designed to drive a nominal net load of 5kΩ and 30pF, which includes the loading due to the external R2. Distortion performance improves when the outputs are loaded as lightly as possible. Some earlier literature refers to these outputs as "LP" rather than V2.

BLOCK DIAGRAM

Overall Block Diagram Showing Four 3-Terminal 2nd Order Sections

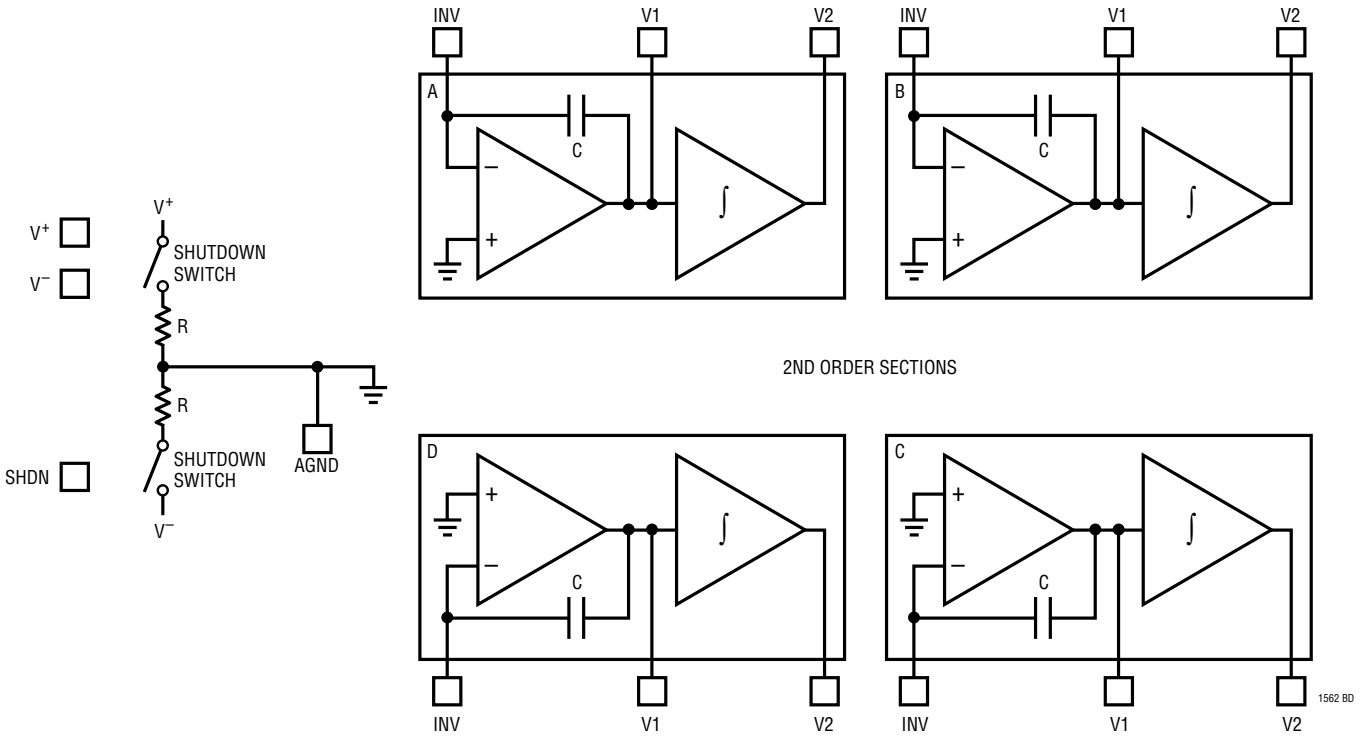

APPLICATIONS INFORMATION

Functional Description

The LTC1562 contains four matched, 2nd order, 3-terminal universal continuous-time filter blocks, each with a virtual-ground input node (INV) and two rail-to-rail outputs (V1, V2). In the most basic applications, one such block and three external resistors provide 2nd order lowpass and bandpass responses simultaneously (Figure 3, with a resistor for Z_{IN}). The three external resistors set standard 2nd order filter parameters f_0, Q and gain. A combination of internal precision components and external resistor R2 sets the center frequency f_0 of each 2nd order block. The LTC1562 is trimmed at manufacture so that f_0 will be 100kHz ±0.5% (±0.6% typical for PDIP package) if the external resistor R2 is exactly 10k.

However, lowpass/bandpass filtering is only one specific application for the 2nd order building blocks in the LTC1562. Highpass response results if the external impedance Z_{IN} in Figure 3 becomes a capacitor C_{IN} (whose value sets only gain, not critical frequencies) as described below. Responses with zeroes are available through other connections (see Notches and Elliptic Responses). Moreover, the virtual-ground input gives each 2nd order section the built-in capability for analog operations such as gain (preamplification), summing and weighting of multiple inputs, handling input voltages beyond the power supplies or accepting current or charge signals directly. **These Operational Filter™ frequency-selective building blocks are nearly as versatile as op amps.**

The user who is not copying exactly one of the Typical Applications schematics shown later in this data sheet is urged to read carefully the next few sections through at least Signal Swings, for orientation about the LTC1562, before attempting to design custom application circuits. Also available free from LTC, and recommended for designing custom filters, is the general-purpose analog filter design software FilterCAD™ for Windows®. This software includes tools for finding the necessary f_0, Q and gain parameters to meet target filter specifications such as frequency response.

Setting f_0 and Q

Each of the four 2nd order sections in the LTC1562 can be programmed for a standard filter function (lowpass, bandpass or highpass) when configured as in Figure 3 with a resistor or capacitor for Z_{IN}. These transfer functions all have the same denominator, a complex pole pair with center frequency $\omega_0 = 2\pi f_0$ and quality parameter Q. (The numerators depend on the response type as described below.) External resistors R2 and R_Q set f_0 and Q as follows:

$$f_0 = \frac{1}{2\pi C\sqrt{(R1)R2}} = \left(\sqrt{\frac{10k\Omega}{R2}}\right)(100kHz)$$

$$Q = \frac{R_Q}{\sqrt{(R1)R2}} = \frac{R_Q}{\sqrt{(10k\Omega)R2}} = \frac{R_Q}{R2}\left(\frac{100kHz}{f_0}\right)$$

R1 = 10k and C = 159pF are internal to the LTC1562 while R2 and R_Q are external.

A typical design procedure proceeds from the desired f_0 and Q as follows, using finite-tolerance fixed resistors. First find the ideal R2 value for the desired f_0:

$$R2(Ideal) = \left(\frac{100kHz}{f_0}\right)^2(10k\Omega)$$

Then select a practical R2 value from the available finite-tolerance resistors. Use the actual R2 value to find the desired R_Q, which also will be approximated with finite tolerance:

$$R_Q = Q\sqrt{(10k\Omega)R2}$$

The f_0 range is approximately 10kHz to 150kHz, limited mainly by the magnitudes of the external resistors required. As shown above, R2 varies with the inverse square of f_0. This relationship desensitizes f_0 to R2's

Operational Filter and FilterCAD are trademarks of Linear Technology Corporation.
Windows is a registered trademark of Microsoft Corporation.

APPLICATIONS INFORMATION

tolerance (by a factor of 2 incrementally), but it also implies that R2 has a wider range than f_0. (R_Q and R_{IN} also tend to scale with R2.) At high f_0 these resistors fall below 5k, heavily loading the outputs of the LTC1562 and leading to increased THD and other effects. At the other extreme, a lower f_0 limit of 10kHz reflects an arbitrary upper resistor limit of 1MΩ. The LTC1562's MOS input circuitry can accommodate higher resistor values than this, but junction leakage current from the input protection circuitry may cause DC errors.

The 2nd order transfer functions $H_{LP}(s)$, $H_{BP}(s)$ and $H_{HP}(s)$ (below) are all inverting so that, for example, at DC the lowpass gain is $-H_L$. If two such sections are cascaded, these phase inversions cancel. Thus, the filter in the application schematic on the first page of this data sheet is a dual DC preserving, noninverting, rail-to-rail lowpass filter, approximating two "straight wires with frequency selectivity."

Figure 4 shows further details of 2nd order lowpass, bandpass and highpass responses. Configurations to obtain these responses appear in the next three sections.

Basic Lowpass

When Z_{IN} of Figure 3 is a resistor of value R_{IN}, a standard 2nd order lowpass transfer function results from V_{IN} to V2 (Figure 5):

$$\frac{V2(s)}{V_{IN}(s)} = H_{LP}(s) = \frac{-H_L\omega_0^2}{s^2 + (\omega_0 / Q)s + \omega_0^2}$$

The DC gain magnitude is $H_L = R2/R_{IN}$. (Note that the transfer function includes a sign inversion.) Parameters ω_0 ($= 2\pi f_0$) and Q are set by R2 and R_Q as above. For a 2nd order lowpass response the gain magnitude becomes QH_L

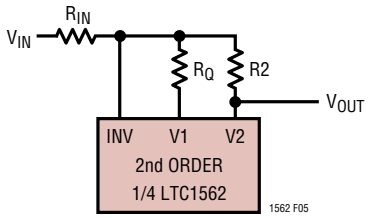

Figure 5. Basic Lowpass Configuration

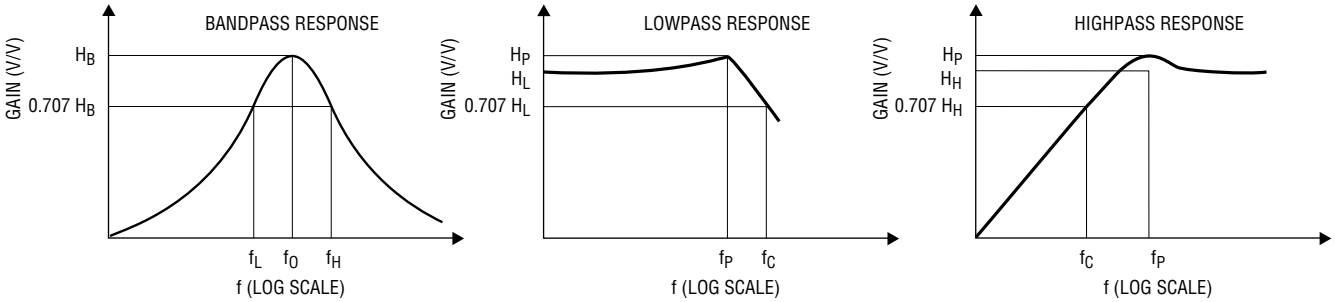

$$Q = \frac{f_0}{f_H - f_L};\ f_0 = \sqrt{f_L f_H}$$

$$f_L = f_0\left(\frac{-1}{2Q} + \sqrt{\left(\frac{1}{2Q}\right)^2 + 1}\right)$$

$$f_H = f_0\left(\frac{1}{2Q} + \sqrt{\left(\frac{1}{2Q}\right)^2 + 1}\right)$$

$$f_C = f_0\sqrt{\left(1 - \frac{1}{2Q^2}\right) + \sqrt{\left(1 - \frac{1}{2Q^2}\right)^2 + 1}}$$

$$f_P = f_0\sqrt{1 - \frac{1}{2Q^2}}$$

$$H_P = H_L\left(\frac{1}{\frac{1}{Q}\sqrt{1 - \frac{1}{4Q^2}}}\right)$$

$$f_C = f_0\left(\sqrt{\left(1 - \frac{1}{2Q^2}\right) + \sqrt{\left(1 - \frac{1}{2Q^2}\right)^2 + 1}}\right)^{-1}$$

$$f_P = f_0\left(\sqrt{1 - \frac{1}{2Q^2}}\right)^{-1}$$

$$H_P = H_H\left(\frac{1}{\frac{1}{Q}\sqrt{1 - \frac{1}{4Q^2}}}\right)$$

Figure 4. Characteristics of Standard 2nd Order Filter Responses

APPLICATIONS INFORMATION

at frequency f_0, and for Q > 0.707, a gain peak occurs at a frequency below f_0, as shown in Figure 4.

Basic Bandpass

There are two different ways to obtain a bandpass function in Figure 3, both of which give the following transfer function form:

$$H_{BP}(s) = \frac{-H_B(\omega_0/Q)s}{s^2 + (\omega_0/Q)s + \omega_0^2}$$

$\omega_0 = 2\pi f_0$ and Q are set by R2 and R_Q as described previously in Setting f_0 and Q. When Z_{IN} is a resistor of value R_{IN}, a bandpass response results at the V1 output (Figure 6a) with a gain parameter $H_B = R_Q/R_{IN}$. Alternatively, a capacitor of value C_{IN} gives a bandpass response at the V2 output (Figure 6b), with the same $H_{BP}(s)$ expression, and the gain parameter now $H_B = (R_Q/10k\Omega)(C_{IN}/159pF)$. This transfer function has a gain magnitude of H_B (its peak value) when the frequency equals f_0 and has a phase shift of 180° at that frequency. Q measures the sharpness of the peak (the ratio of f_0 to –3dB bandwidth) in a 2nd order bandpass function, as illustrated in Figure 4.

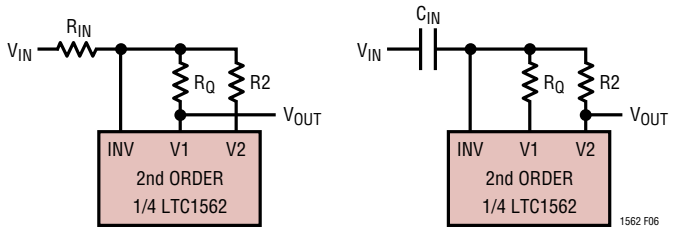

(a) Resistive Input (b) Capacitive Input

Figure 6. Basic Bandpass Configurations

Basic Highpass

When Z_{IN} of Figure 3 is a capacitor of value C_{IN}, a highpass response appears at the V1 output (Figure 7).

$$\frac{V1(s)}{V_{IN}(s)} = H_{HP}(s) = \frac{-H_H s^2}{s^2 + (\omega_0/Q)s + \omega_0^2}$$

Parameters $\omega_0 = 2\pi f_0$ and Q are set by R2 and R_Q as above. The highpass gain parameter is $H_H = C_{IN}/159pF$. For a 2nd order highpass response the gain magnitude at frequency f_0 is QH_H, and approaches H_H at high frequencies ($f >> f_0$). For Q > 0.707, a gain peak occurs at a frequency above f_0 as shown in Figure 4. The transfer function includes a sign inversion.

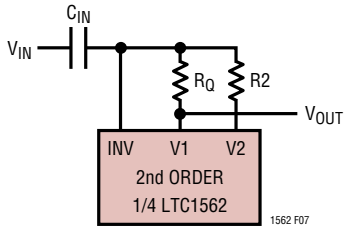

Figure 7. Basic Highpass Configuration

Signal Swings

The V1 and V2 outputs are capable of swinging to within roughly 100mV of each power supply rail. As with any analog filter, the signal swings in each 2nd order section must be scaled so that no output overloads (saturates), even if it is not used as a signal output. (Filter literature often calls this the "dynamics" issue.) When an unused output has a larger swing than the output of interest, the section's gain or input amplitude must be scaled down to avoid overdriving the unused output. The LTC1562 can still be used with high performance in such situations as long as this constraint is followed.

For an LTC1562 section as in Figure 3, the magnitudes of the two outputs V2 and V1, at a frequency $\omega = 2\pi f$, have the ratio,

$$\frac{|V2(j\omega)|}{|V1(j\omega)|} = \frac{(100kHz)}{f}$$

regardless of the details of Z_{IN}. Therefore, an input frequency above or below 100kHz produces larger output amplitude at V1 or V2, respectively. This relationship can guide the choice of filter design for maximum dynamic range in situations (such as bandpass responses) where there is more than one way to achieve the desired frequency response with an LTC1562 section.

APPLICATIONS INFORMATION

Because 2nd order sections with Q ≥ 1 have response peaks near f_0, the gain ratio above implies some rules of thumb:

f_0 < 100kHz ⇒ V2 tends to have the larger swing

f_0 > 100kHz ⇒ V1 tends to have the larger swing.

The following situations are convenient because the relative swing issue does not arise. The unused output's swing is naturally the smaller of the two in these cases:

Lowpass response (resistor input, V2 output, Figure 5) with f_0 < 100kHz

Bandpass response (capacitor input, V2 output, Figure 6b) with f_0 < 100kHz

Bandpass response (resistor input, V1 output, Figure 6a) with f_0 > 100kHz

Highpass response (capacitor input, V1 output, Figure 7) with f_0 > 100kHz

The LTC1562-2, a higher frequency derivative of the LTC1562, has a design center f_0 of 200kHz compared to 100kHz in the LTC1562. The rules summarized above apply to the LTC1562-2 but with 200kHz replacing the 100kHz limits. Thus, an LTC1562-2 lowpass filter section with f_0 below 200kHz automatically satisfies the desirable condition of the unused output carrying the smaller signal swing.

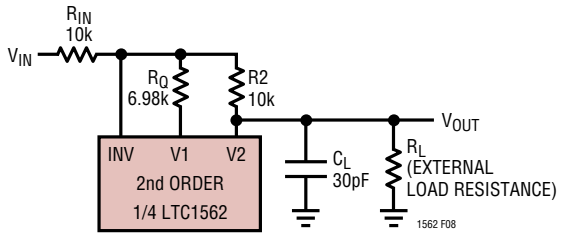

Figure 8. 100kHz, Q = 0.7 Lowpass Circuit for Distortion vs Loading Test

Low Level or Wide Range Input Signals

The LTC1562 contains a built-in capability for low noise amplification of low level signals. The Z_{IN} impedance in each 2nd order section controls the block's gain. When set for unity passband gain, a 2nd order section can deliver an output signal more than 100dB above the noise level. If low level inputs require further dynamic range, reducing the value of Z_{IN} boosts the signal gain while reducing the input referred noise. This feature can increase the SNR for low level signals. Varying or switching Z_{IN} is also an efficient way to effect automatic gain control (AGC). From a system viewpoint, this technique boosts the ratio of maximum signal to minimum noise, for a typical 2nd order lowpass response (Q = 1, f_0 = 100kHz), to 118dB.

Input Voltages Beyond the Power Supplies

Properly used, the LTC1562 can accommodate input voltage excursions well beyond its supply voltage. This requires care in design but can be useful, for example, when large out-of-band interference is to be removed from a smaller desired signal. The flexibility for different input voltages arises because the INV inputs are at virtual ground potential, like the inverting input of an op amp with negative feedback. The LTC1562 fundamentally responds to input *current* and the external voltage V_{IN} appears only across the external impedance Z_{IN} in Figure 3.

To accept beyond-the-supply input voltages, it is important to keep the LTC1562 powered on, not in shutdown mode, and to avoid saturating the V1 or V2 output of the 2nd order section that receives the input. If any of these conditions is violated, the INV input will depart from a virtual ground, leading to an overload condition whose recovery timing depends on circuit details. In the event that this overload drives the INV input beyond the supply voltages, the LTC1562 could be damaged.

The most subtle part of preventing overload is to consider the possible input signals or spectra and take care that none of them can drive either V1 or V2 to the supply limits. Note that neither output can be allowed to saturate, even if it is not used as the signal output. If necessary the passband gain can be reduced (by increasing the impedance of Z_{IN} in Figure 3) to reduce output swings.

The final issue to be addressed with beyond-the-supply inputs is current and voltage limits. Current entering the virtual ground INV input flows eventually through the output circuitry that drives V1 and V2. The input current magnitude ($|V_{IN}|/|Z_{IN}|$ in Figure 3) should be limited by design to less than 1mA for good distortion performance. On the other hand, the input voltage V_{IN} appears across the

APPLICATIONS INFORMATION

external component Z_{IN}, usually a resistor or capacitor. This component must of course be rated to sustain the magnitude of voltage imposed on it.

Lowpass "T" Input Circuit

The virtual ground INV input in the Operational Filter block provides a means for adding an "extra" lowpass pole to any resistor-input application (such as the basic lowpass, Figure 5, or bandpass, Figure 6a). The resistor that would otherwise form Z_{IN} is split into two parts and a capacitor to ground added, forming an R-C-R "T" network (Figure 9). This adds an extra, independent real pole at a frequency:

$$f_P = \frac{1}{2\pi R_P C_T}$$

where C_T is the new external capacitor and R_P is the parallel combination of the two input resistors R_{INA} and R_{INB}. This pair of resistors must normally have a prescribed series total value R_{IN} to set the filter's gain as described above. The parallel value R_P can however be set arbitrarily (to $R_{IN}/4$ or less) which allows choosing a convenient standard capacitor value for C_T and fine tuning the new pole with R_P.

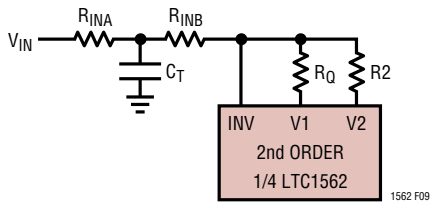

Figure 9. Lowpass "T" Input Circuit

The procedure therefore is to begin with the target extra pole frequency f_P. Determine the series value R_{IN} from the gain requirement. Select a capacitor value C_T such that $R_P = 1/(2\pi f_P C_T)$ is no greater than $R_{IN}/4$, and then choose R_{INA} and R_{INB} that will simultaneously have the parallel value R_P and the series value R_{IN}. Such R_{INA} and R_{INB} can be found directly from the expression:

$$\frac{1}{2}R_{IN} \pm \frac{1}{2}\sqrt{R_{IN}^2 - (4R_{IN}R_P)}$$

A practical limitation of this technique is that the C_T capacitor values that tend to be required (hundreds or thousands of pF) can destabilize the op amp in Figure 3 if R_{INB} is too small, leading to AC errors such as Q enhancement. For this reason, when R_{INA} and $R_{IN}B$ are unequal, preferably the larger of the two should be placed in the R_{INB} position.

Highpass "T" Input Circuit

A method similar to the preceding technique adds an "extra" highpass pole to any capacitor-input application (such as the bandpass of Figure 6b or the highpass of Figure 7). This method splits the input capacitance C_{IN} into two series parts C_{INA} and C_{INB}, with a resistor R_T to ground between them (Figure 10). This adds an extra 1st order highpass corner with a zero at DC and a pole at the frequency:

$$f_P = \frac{1}{2\pi R_T C_P}$$

where $C_P = C_{INA} + C_{INB}$ is the parallel combination of the two capacitors. At the same time, the total series capacitance C_{IN} will control the filter's gain parameter (H_H in Basic Highpass). For a given series value C_{IN}, the parallel value C_P can still be set arbitrarily (to $4C_{IN}$ or greater).

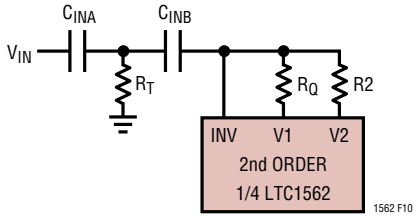

Figure 10. Highpass "T" Input Circuit

The procedure then is to begin with the target corner (pole) frequency f_P. Determine the series value C_{IN} from the gain requirement (for example, $C_{IN} = H_H(159pF)$ for a highpass). Select a resistor value R_T such that $C_P = 1/(2\pi R_T f_P)$ is at least $4C_{IN}$, and select C_{INA} and C_{INB} that will simultaneously have the parallel value C_P and the series value C_{IN}. Such C_{INA} and C_{INB} can be found directly from the expression:

$$\frac{1}{2}C_P \pm \frac{1}{2}\sqrt{C_P^2 - (4C_{IN}C_P)}$$

APPLICATIONS INFORMATION

This procedure can be iterated, adjusting the value of R_T, to find convenient values for C_{INA} and C_{INB} since resistor values are generally available in finer increments than capacitor values.

Different "f_0" Measures

Standard 2nd order filter algebra, as in Figure 4 and the various transfer-function expressions in this data sheet, uses a center frequency parameter f_0 (or ω_0, which is $2\pi f_0$). f_0 can also be measured in practical ways, including:

- The frequency where a bandpass response has 180° phase shift
- The frequency where a bandpass response has peak gain
- The geometric mean of the –3.01dB gain frequencies in a bandpass ($\sqrt{f_L f_H}$ in Figure 4)

An ideal mathematical 2nd order response yields exactly the same frequency by these three measures. However, real 2nd order filters with finite-bandwidth circuitry show small differences between the practical f_0 measures, which may be important in critical applications. The issue is chiefly of concern in high-Q bandpass applications where, as the data below illustrate, the different f_0 measurements tend to converge anyway for the LTC1562. At low Q the bandpass peak is not sharply defined and the –3dB frequencies f_L and f_H are widely separated from this peak.

The LTC1562's f_0 is trimmed in production to give an accurate 180° phase shift in the configuration of Figure 6a with resistor values setting f_0 = 100kHz and Q = 1. Table 1 below shows typical differences between f_0 values measured via the bandpass 180° criterion and f_0 values measured using the two other methods listed above (Figure 6a, $R_{IN} = R_Q$).

Table 1

f_0 (BP 180°)	Q = 1 BP-PEAK f_0	Q = 1 $\sqrt{f_L f_H}$ f_0	Q = 5 BP-PEAK f_0	Q = 5 $\sqrt{f_L f_H}$ f_0
60kHz	+0.3%	+0.3%	+0.05%	+0.05%
100kHz	+0.6%	+0.6%	+0.1%	+0.1%
140kHz	+0.8%	+0.8%	+0.15%	+0.15%

LTC1562 Demo Board

The LTC1562 demo board is assembled with an LTC1562 or LTC1562A in a 20-pin SSOP package and power supply decoupling capacitors. Jumpers on the board configure the LTC1562 for dual or single supply operation and power shutdown. Pads for surface mount resistors and capacitors are provided to build application-specific filters. Also provided are terminals for inputs, outputs and power supplies.

TYPICAL APPLICATIONS (Basic)

Quad 3rd Order Butterworth Lowpass Filter, Gain = –1

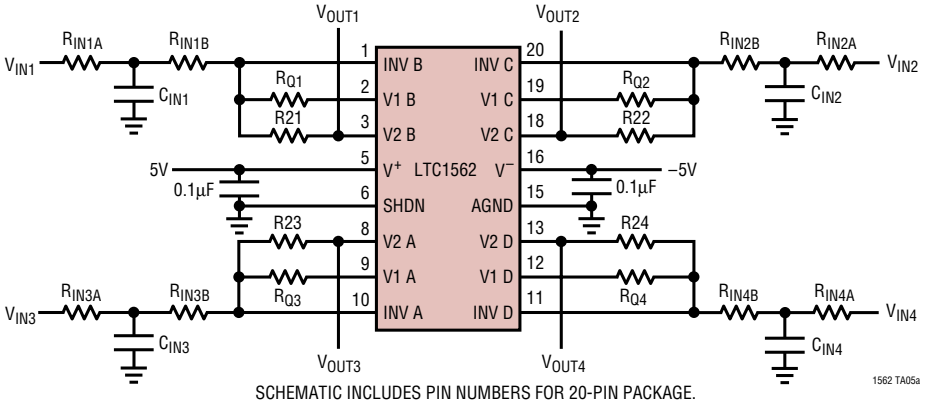

SCHEMATIC INCLUDES PIN NUMBERS FOR 20-PIN PACKAGE.
PINS 4, 7, 14, 17 (NOT SHOWN) ALSO CONNECT TO V^-

Amplitude Response

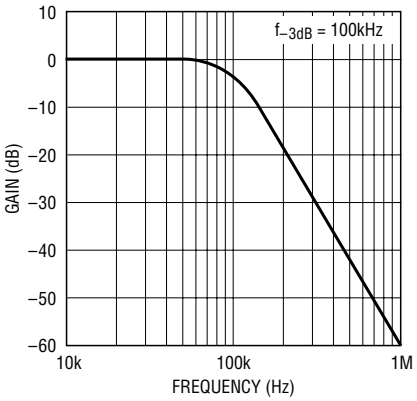

1562 TA05b

Quad 3rd Order Butterworth Lowpass Filters	f_{-3dB} 20kHz	f_{-3dB} 40kHz	f_{-3dB} 60kHz	f_{-3dB} 80kHz	f_{-3dB} 100kHz	f_{-3dB} 120kHz	f_{-3dB} 140kHz
C_{IN}	220pF	1000pF	1000pF	1000pF	1000pF	1000pF	1000pF
R_{INA}	44.2k	4.32k	3.16k	2.43k	1.96k	1.87k	1.69k
R_{INB}	205k	57.6k	24.3k	13.0k	8.06k	5.11k	3.4k
R_Q	249k	61.9k	27.4k	15.4k	10.0k	6.98k	5.11k
R2	249k	61.9k	27.4k	15.4k	10.0k	6.98k	5.11k

All four sections have identical R_{INA}, R_{INB} and C_{IN} values. All resistor values are ±1%

TYPICAL APPLICATIONS (Basic)

Dual 4th Order Lowpass Filters

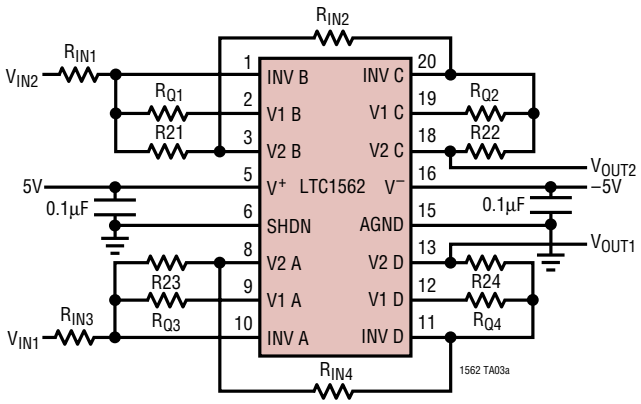

SCHEMATIC INCLUDES PIN NUMBERS FOR 20-PIN PACKAGE.
PINS 4, 7, 14, 17 (NOT SHOWN) ALSO CONNECT TO V⁻

Amplitude Response

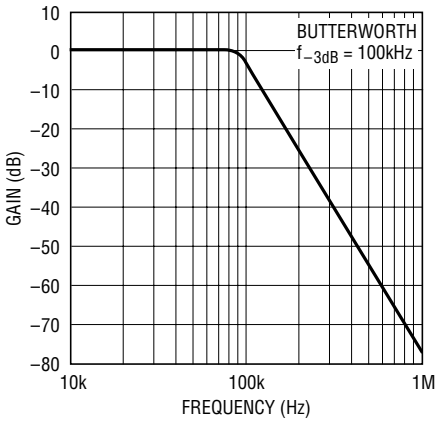

Quick Design Formulas for Some Popular Response Types:

	Butterworth (Maximally Flat Passband) for f_C 10kHz to 140kHz	**Chebyshev** (Equiripple Passband) for f_C 20kHz to 120kHz	**Bessel** (Good Transient Response) for f_C 10kHz to 70kHz
R21, R23, R_{IN1}, R_{IN3} =	$10k\left(\frac{100kHz}{f_C}\right)^2$	$14.24k\left(\frac{100kHz}{f_C}\right)^2$	$3.951k\left(\frac{100kHz}{f_C}\right)^2$
R_{Q1}, R_{Q3} =	$5.412k\left(\frac{100kHz}{f_C}\right)$	$7.26k\left(\frac{100kHz}{f_C}\right)$	$5.066k\left(\frac{100kHz}{f_C}\right)$
R22, R24, R_{IN2}, R_{IN4} =	$10k\left(\frac{100kHz}{f_C}\right)^2$	$7.097k\left(\frac{100kHz}{f_C}\right)^2$	$4.966k\left(\frac{100kHz}{f_C}\right)^2$
R_{Q2}, R_{Q4} =	$13.07k\left(\frac{100kHz}{f_C}\right)$	$17.53k\left(\frac{100kHz}{f_C}\right)$	$3.679k\left(\frac{100kHz}{f_C}\right)$

Notes: f_C is the cutoff frequency: For Butterworth and Bessel, response is 3dB down at f_C. For Chebyshev filters with ±0.1dB passband ripple up to 0.95 f_C, use LTC1562 "A" grade.

Example: Butterworth response, f_C = 50kHz. from the formulas above, R21 = R23 = R_{IN1} = R_{IN3} = 10k(100kHz/50kHz)^2 = 40k. R_{Q1} = R_{Q3} = 5.412k(100kHz/50kHz) = 10.82k. R22 = R24 = R_{IN2} = R_{IN4} = 10k(100kHz/50kHz)^2 = 40k. R_{Q2} = R_{Q4} = 13.07k(100kHz/50kHz) = 26.14k. Use nearest 1% values.

1562 TA03 TABLE

TYPICAL APPLICATIONS (Basic)

8th Order Lowpass Filters

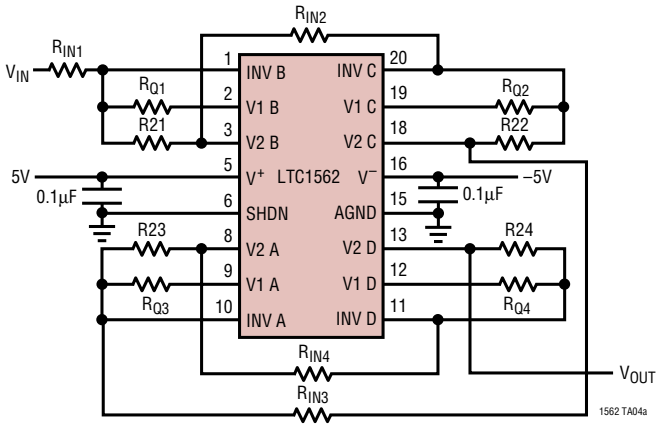

SCHEMATIC INCLUDES PIN NUMBERS FOR 20-PIN PACKAGE.
PINS 4, 7, 14, 17 (NOT SHOWN) ALSO CONNECT TO V⁻

Amplitude Response

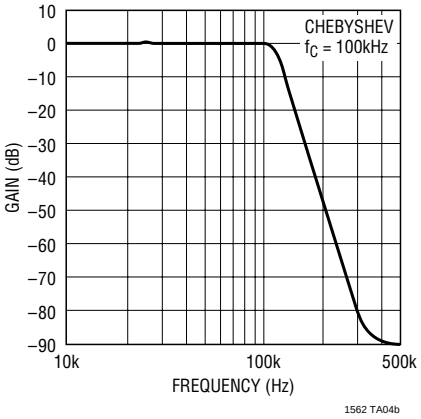

Quick Design Formulas for Some Popular Response Types:

Butterworth (Maximally Flat Passband) for f_C 10kHz to 140kHz	**Chebyshev** (Equiripple Passband) for f_C 20kHz to 120kHz	**Bessel** (Good Transient Response) for f_C 10kHz to 70kHz
$R21 = R_{IN1} = 10k\left(\frac{100kHz}{f_C}\right)^2$	$R21 = 7.51k\left(\frac{100kHz}{f_C}\right)^2$, $R_{IN1} = 2.2R21^*$	$R21 = R_{IN1} = 2.61k\left(\frac{100kHz}{f_C}\right)^2$
$R_{Q1} = 6.01k\left(\frac{100kHz}{f_C}\right)$	$R_{Q1} = 119.3k\left(\frac{100kHz}{f_C}\right)\left(\frac{100kHz}{f_C + 560kHz}\right)$	$R_{Q1} = 3.63k\left(\frac{100kHz}{f_C}\right)$
$R22 = R_{IN2} = 10k\left(\frac{100kHz}{f_C}\right)^2$	$R22 = R_{IN2} = 14.99k\left(\frac{100kHz}{f_C}\right)^2$	$R22 = R_{IN2} = 2.07k\left(\frac{100kHz}{f_C}\right)^2$
$R_{Q2} = 9k\left(\frac{100kHz}{f_C}\right)$	$R_{Q2} = 279.9k\left(\frac{100kHz}{f_C}\right)\left(\frac{100kHz}{f_C + 2440kHz}\right)$	$R_{Q2} = 5.58k\left(\frac{100kHz}{f_C}\right)$
$R23 = R_{IN3} = 10k\left(\frac{100kHz}{f_C}\right)^2$	$R23 = R_{IN3} = 7.15k\left(\frac{100kHz}{f_C}\right)^2$	$R23 = R_{IN3} = 2.96k\left(\frac{100kHz}{f_C}\right)^2$
$R_{Q3} = 5.1k\left(\frac{100kHz}{f_C}\right)$	$R_{Q3} = 118.1k\left(\frac{100kHz}{f_C}\right)\left(\frac{100kHz}{f_C + 530kHz}\right)$	$R_{Q3} = 3.05k\left(\frac{100kHz}{f_C}\right)$
$R24 = R_{IN4} = 10k\left(\frac{100kHz}{f_C}\right)^2$	$R24 = 26.7k\left(\frac{100kHz}{f_C}\right)^2$, $R_{IN4} = \frac{R24^*}{2.2}$	$R24 = R_{IN4} = 3.14k\left(\frac{100kHz}{f_C}\right)^2$
$R_{Q4} = 25.63k\left(\frac{100kHz}{f_C}\right)$	$R_{Q4} = 8.75k\left(\frac{100kHz}{f_C}\right)$	$R_{Q4} = 2.84k\left(\frac{100kHz}{f_C}\right)$

Notes: f_C is the cutoff frequency: For Butterworth and Bessel, response is 3dB down at f_C. For Chebyshev filters with ±0.1dB passband ripple up to 0.95 f_C, use LTC1562 "A" grade. *The resistor values marked with an asterisk (*) in the Chebyshev formulas (R21 and R24) should be rounded to the nearest standard finite-tolerance value *before* computing the values dependent on them (R_{IN1} and R_{IN4} respectively).

Example: Chebyshev response, f_C = 100kHz. The formulas above give R21 = 7.51k, nearest standard 1% value 7.50k. Using this 1% value gives R_{IN1} = 16.5k, already a standard 1% value. R_{Q1} = 18.075k, nearest 1% value 18.2k. R22 = R_{IN2} = 14.99k, nearest 1% value 15k. R_{Q2} = 11.02k, nearest 1% value 11k. R23 = R_{IN3} = 7.15k, already a standard 1% value. R_{Q3} = 18.75k, nearest 1% value 18.7k. R24 = 26.7k, already a standard 1% value. This gives R_{IN4} = 12.14k, nearest 1% value 12.1k. R_{Q4} = 8.75k, nearest 1% value 8.66k.

1562 TA04 TABLE

TYPICAL APPLICATIONS (Basic)

8th Order Bandpass Filter, Single 5V Supply,
–3dB Bandwidth = Center Frequency / 10

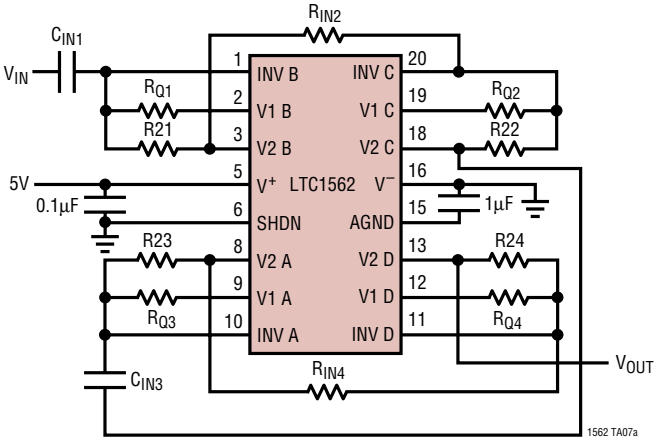

SCHEMATIC INCLUDES PIN NUMBERS FOR 20-PIN PACKAGE.
PINS 4, 7, 14, 17 (NOT SHOWN) ALSO CONNECT TO V^-

Amplitude Response

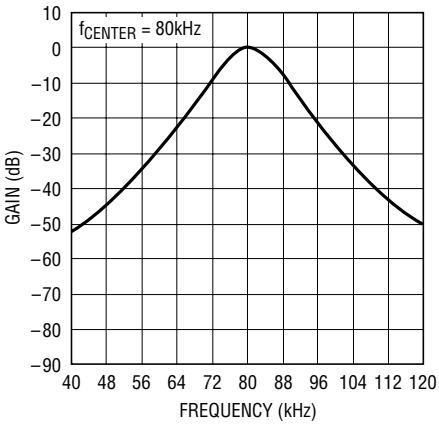

Quick Design Formulas for Center Frequency f_C (Recommended Range 40kHz to 140kHz):

$$R21 = R23 = 10.6k\left(\frac{100kHz}{f_C}\right)^2 \qquad R_{Q1} = R_{Q3} = 164.6k\left(\frac{100kHz}{f_C}\right)\left(\frac{100kHz}{f_C + 319kHz}\right)$$

$$R22 = R24 = 9.7k\left(\frac{100kHz}{f_C}\right)^2 \qquad R_{Q2} = R_{Q4} = 143.2k\left(\frac{100kHz}{f_C}\right)\left(\frac{100kHz}{f_C + 294kHz}\right)$$

$$C_{IN1} = C_{IN3} = 159pF\left(\frac{10k}{R_{Q1}}\right) \qquad R_{IN2} = R_{IN4} = \frac{R22R_{Q1}C_{IN1}}{(10k)(10.6pF)}\left(\frac{100kHz}{f_C + 286kHz}\right)$$

Notes: R_{Q1}, R22 and C_{IN1} should be rounded to the nearest standard finite-tolerance value *before* using these values in the later formulas.

Example: Center frequency f_C of 80kHz. The formulas give R21 = R23 = 16.56k, nearest standard 1% value 16.5k. $R_{Q1} = R_{Q3}$ = 51.56k, nearest 1% value 51.1k. R22 = R24 = 15.15k, nearest 1% value 15k. $R_{Q2} = R_{Q4}$ = 47.86k, nearest 1% value 47.5k. $C_{IN1} = C_{IN2}$ = 31.11pF using 51.1k for R_{Q1}, nearest standard 5% capacitor value 33pF. This and the 1% value R22 = 15k also go into the calculation for $R_{IN2} = R_{IN4}$ = 65.20k, nearest 1% value 64.9k.

1562 TA07 TABLE

TYPICAL APPLICATIONS (Basic)

8th Order Bandpass Filter, Single 5V Supply,
–1dB Bandwidth = Center Frequency / 10

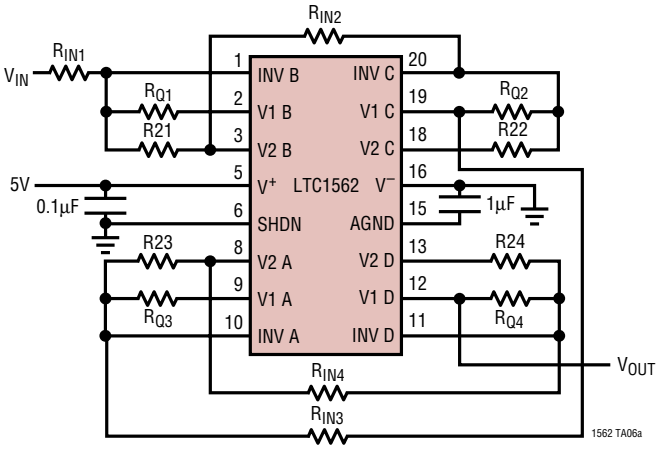

SCHEMATIC INCLUDES PIN NUMBERS FOR 20-PIN PACKAGE.
PINS 4, 7, 14, 17 (NOT SHOWN) ALSO CONNECT TO V⁻

Amplitude Response

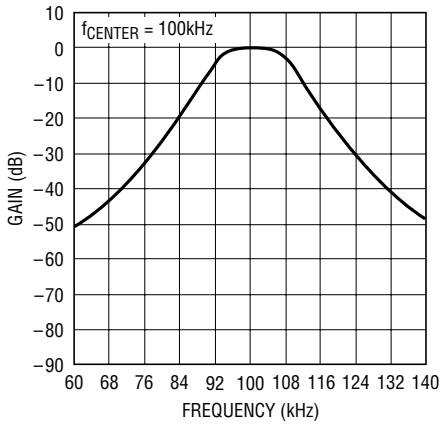

Quick Design Formulas for a Center Frequency f_C (Recommended Range 50kHz to 120kHz):

$$R21 = R23 = 11.7k\left(\frac{100kHz}{f_C}\right)^2 \qquad R_{IN1} = R_{IN3} = \left(\frac{f_C + 1736kHz}{100kHz}\right)\left(\frac{R21}{2.56}\right) \qquad R_{Q1} = R_{Q3} = 215.5k\left(\frac{100kHz}{f_C}\right)\left(\frac{100kHz}{f_C + 229kHz}\right)$$

$$R22 = R24 = 8.66k\left(\frac{100kHz}{f_C}\right)^2 \qquad R_{IN2} = R_{IN4} = \left(\frac{f_C + 634kHz}{100kHz}\right)\left(\frac{R_{Q2}}{14.36}\right) \qquad R_{Q2} = R_{Q4} = 286.2k\left(\frac{100kHz}{f_C}\right)\left(\frac{100kHz}{f_C + 351kHz}\right)$$

Notes: R21 and R_{Q2} should be rounded to the nearest standard finite-tolerance value *before* using these values in the later formulas. For f_C < 100kHz, the maximum peak-to-peak passband input level is (f_C/100kHz)5V. Use LTC1562A for minimum variation of passband gain.

Example: Center frequency f_C of 100kHz. The formulas give R21 = R23 = 11.7k, nearest standard 1% value 11.5k. This value gives $R_{IN1} = R_{IN3}$ = 82.46k, nearest 1% value 82.5k. $R_{Q1} = R_{Q3}$ = 65.5k, nearest 1% value 64.9k. R22 = R24 = 8.66k, already a standard 1% value. This gives $R_{IN2} = R_{IN4}$ = 32.4k (again already a standard 1% value). $R_{Q2} = R_{Q4}$ = 63.45k, nearest 1% value 63.4k. If LTC1562A is used, resistor tolerances tighter than 1% will further improve the passband gain accuracy.

1562 TA06 TABLE

TYPICAL APPLICATIONS (Basic)

8th Order Bandpass (High Frequency) Filter

$-3dB\ Bandwidth = \frac{Center\ Frequency}{10}$, Gain = 10

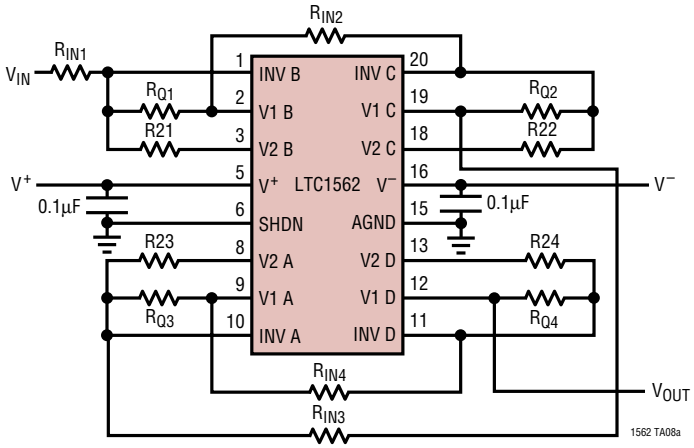

SCHEMATIC INCLUDES PIN NUMBERS FOR 20-PIN PACKAGE.
PINS 4, 7, 14, 17 (NOT SHOWN) ALSO CONNECT TO V^-

Amplitude Response

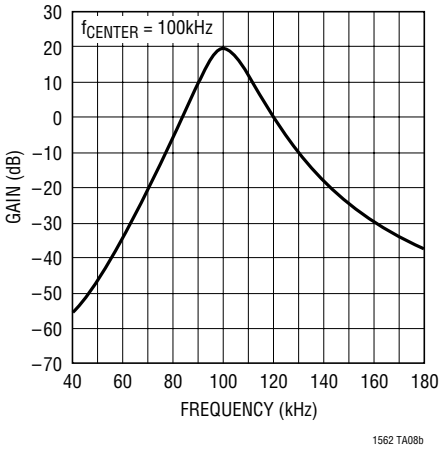

8th Order Bandpass Filter $-3dB\ BW = \frac{f_{CENTER}}{10}$, Gain = 10	f_{CENTER} 80kHz	f_{CENTER} 90kHz	f_{CENTER} 100kHz	f_{CENTER} 110kHz	f_{CENTER} 120kHz	f_{CENTER} 130kHz	f_{CENTER} 140kHz
Side B							
R_{IN1}	4.64k	5.23k	6.34k	5.11k	5.11k	5.49k	5.62k
R_{Q1}	46.4k	52.3k	42.2k	38.3k	34.8k	32.4k	30.1k
R21	12.4k	15.4k	10.0k	8.25k	6.98k	5.9k	5.11k
Sides A, C, D							
R_{IN2}, R_{IN3}, R_{IN4}	46.4k	52.3k	42.2k	38.3k	34.8k	32.4k	30.1k
R_{Q2}, R_{Q3}, R_{Q4}	46.4k	52.3k	42.2k	38.3k	34.8k	32.4k	30.1k
R22, R23, R24	12.4k	15.4k	10.0k	8.25k	6.98k	5.90k	5.11k

All resistor values are ±1%

TYPICAL APPLICATIONS (Basic)

8th Order Wideband Bandpass Filter
f_{CENTER} = 50kHz, –3dB BW 40kHz to 60kHz

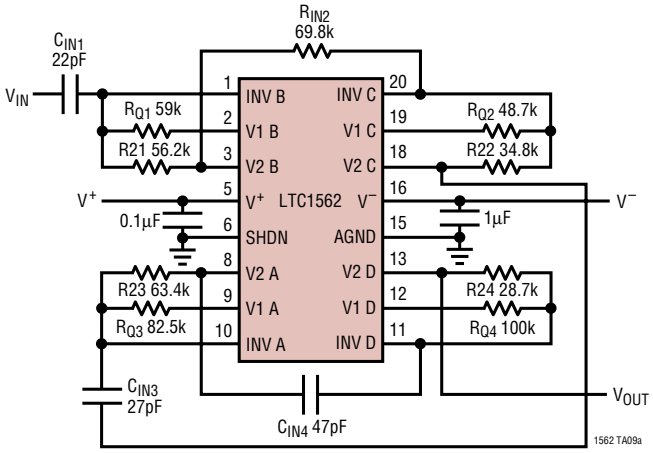

SCHEMATIC INCLUDES PIN NUMBERS FOR 20-PIN PACKAGE.
PINS 4, 7, 14, 17 (NOT SHOWN) ALSO CONNECT TO V^-

Amplitude Response

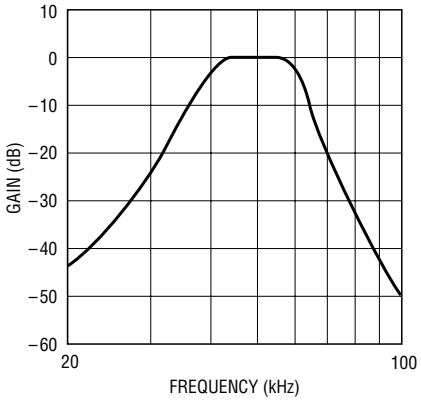

8th Order Highpass 0.05dB Ripple Chebyshev Filter f_{CUTOFF} = 30kHz

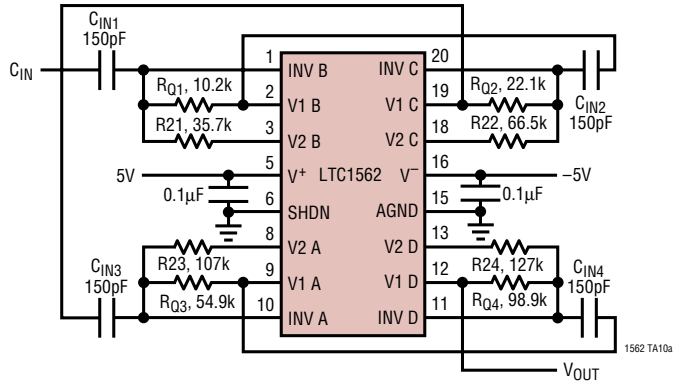

SCHEMATIC INCLUDES PIN NUMBERS FOR 20-PIN PACKAGE.
PINS 4, 7, 14, 17 (NOT SHOWN) ALSO CONNECT TO V^-
TOTAL OUTPUT NOISE = 40µV_{RMS}

Amplitude Response

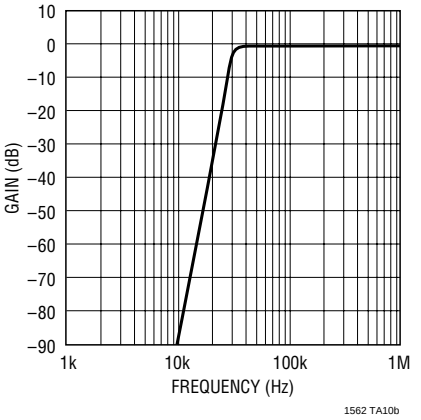

2nd Order 30kHz Highpass Cascaded with 6th Order 138kHz Lowpass

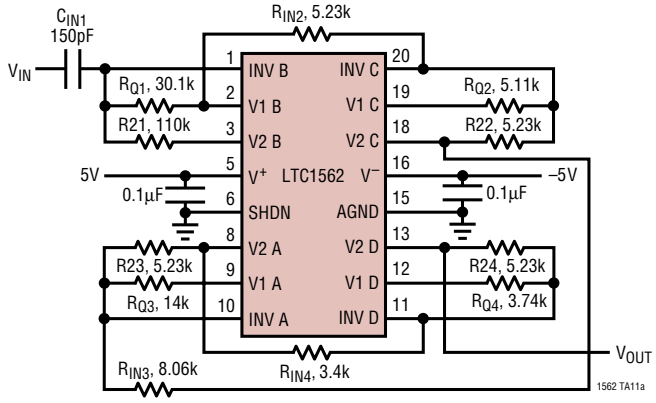

SCHEMATIC INCLUDES PIN NUMBERS FOR 20-PIN PACKAGE.
PINS 4, 7, 14, 17 (NOT SHOWN) ALSO CONNECT TO V^-
ALL RESISTORS = 1% METAL FILM

Amplitude Response

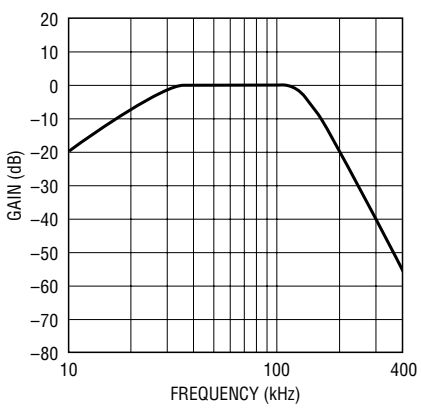

APPLICATIONS INFORMATION

Notches and Elliptic Responses

The basic (essentially all-pole) LTC1562 circuit techniques described so far will serve many applications. However, the sharpest-cutoff lowpass, highpass and bandpass filters include notches (imaginary zero pairs) in the stopbands. A notch, or band-reject, filter has zero gain at a frequency f_N. Notches are also occasionally used by themselves to reject a narrow band of frequencies. A number of circuit methods will give notch responses from an Operational Filter block. Each method exhibits an input-output transfer function that is a standard 2nd order band-reject response:

$$H_{BR}(s) = \frac{-H_N\left(s^2 + \omega_N^2\right)}{s^2 + \left(\omega_0 / Q\right)s + \omega_0^2}$$

with parameters $\omega_N = 2\pi f_N$ and H_N set by component values as described below. ($\omega_0 = 2\pi f_0$ and Q are set for the Operational Filter block by its R2 and R_Q resistors as described earlier in Setting f_0 and Q). Characteristically, the gain magnitude $|H_{BR}(j2\pi f)|$ has the value $H_N(f_N^2/f_0^2)$ at DC (f = 0) and H_N at high frequencies (f >> f_N), so in addition to the notch, the gain changes by a factor:

$$\frac{\text{High Frequency Gain}}{\text{DC Gain}} = \frac{f_0^2}{f_N^2}$$

The common principle in the following circuit methods is to add a signal to a filtered replica of itself having equal gain and 180° phase difference at the desired notch frequency f_N. The two signals then cancel out at frequency f_N. The notch depth (the completeness of cancellation) will be infinite to the extent that the two paths have matching gains. Three practical circuit methods are presented here, with different features and advantages.

Examples and design procedures for practical filters using these techniques appear in a series of articles attached to this data sheet on the Linear Technology web site (www.linear-tech.com). Also available free is the analog filter design software, FilterCAD for Windows, recommended for designing filters not shown in the Typical Applications schematics in this data sheet.

Elementary Feedforward Notches

A "textbook" method to get a 180° phase difference at frequency f_N for a notch is to dedicate a bandpass 2nd order section (described earlier under Basic Bandpass), which gives 180° phase shift at the section's center frequency f_0 (Figure 11, with $C_{IN1} = 0$), so that $f_N = f_0$. The bandpass section of Figure 6a, at its center frequency f_0, has a phase shift of 180° and a gain magnitude of $H_B = R_Q/R_{IN}$. A notch results in Figure 11 if the paths summed into virtual ground have the same gains at the 180° frequency (then $I_0 = 0$). This requires a constraint on the resistor values:

$$\frac{R_{IN2}}{R_{FF2}} = \frac{R_{Q1}}{R_{IN1}}$$

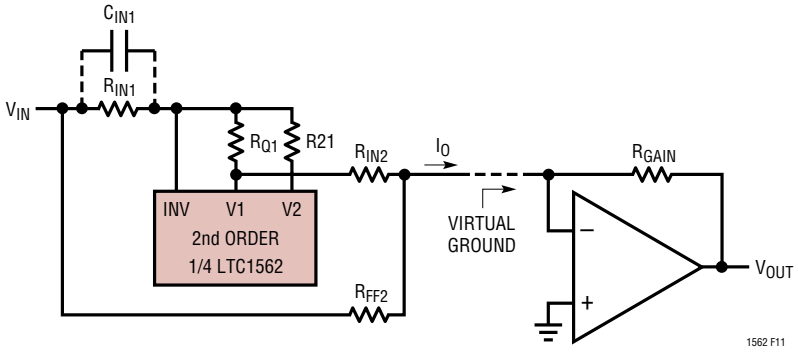

Figure 11. Feedforward Notch Configuration for $f_N \geq f_0$

APPLICATIONS INFORMATION

Note that the depth of the notch depends on the accuracy of this resistor ratioing. The virtual-ground summing point in Figure 11 may be from an op amp as shown, or in a practical cascaded filter, the INV input of another Operational Filter block. The transfer function in Figure 11 with $C_{IN1} = 0$ is a "pure" notch ($f_N = f_0$) of the $H_{BR}(s)$ form above, and the parameters are:

$$f_N = f_0$$

$$H_N = \frac{R_{GAIN}}{R_{FF2}}$$

Because $f_N = f_0$ in this case, the gain magnitude both at DC and at high frequencies ($f >> f_N$) is the same, H_N (assuming that the op amp in Figure 11 adds no significant frequency response). Figure 12 shows this. Such a notch is inefficient as a cascaded part of a highpass, lowpass or bandpass filter (the most common uses for notches). Variations of Figure 11 can add a highpass or lowpass shape to the notch, without using more Operational Filter blocks. The key to doing so is to decouple the notch frequency f_N from the center frequency f_0 of the Operational Filter block (this is shown in Figures 13 and 15). The next two sections summarize two variations of Figure 11 with this highpass/lowpass shaping, and the remaining section shows a different approach to building notches.

Feedforward Notches for $f_N > f_0$

When $C_{IN1} \neq 0$ in Figure 11, the notch frequency f_N is above the center frequency f_0 and the response has a lowpass shape as well as a notch (Figure 13). C_{IN1} contributes phase lead, which increases the notch frequency above the center frequency of the 2nd order Operational Filter block. The resistor constraint from the previous section also applies here and the $H_{BR}(s)$ parameters become:

$$f_N = f_0 \sqrt{\frac{1}{1 - \frac{R_{IN1}C_{IN1}}{R_{Q1}C}}}$$

$$H_N = \left(\frac{R_{GAIN}}{R_{FF2}}\right)\left(\frac{f_0^2}{f_N^2}\right)$$

C is the internal capacitor value in the Operational Filter block (in the LTC1562, 159pF).

The configuration of Figure 11 is most useful for a stopband notch in a lowpass filter or as an upper stopband notch in a bandpass filter, since the two resistors R_{IN2} and R_{FF2} can replace the input resistor R_{IN} of either a lowpass section (Figure 5) or a resistor-input bandpass section (Figure 6a) built from a second Operational Filter block.

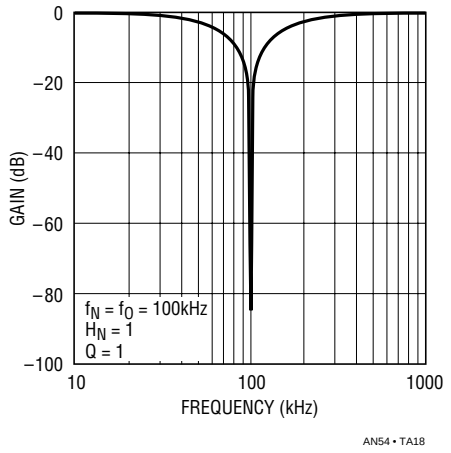

Figure 12. Notch Response with $f_N = f_0$

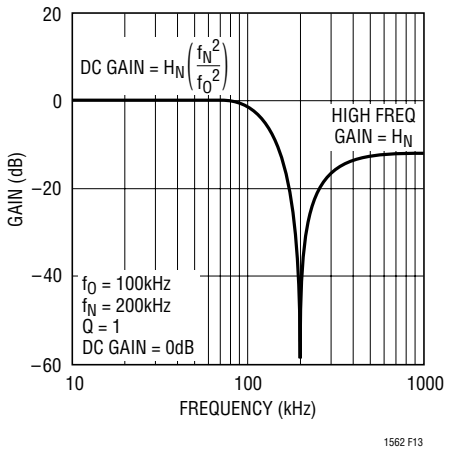

Figure 13. Notch Response with $f_N > f_0$

APPLICATIONS INFORMATION

The configuration is robust against tolerances in the C_{IN1} value when f_N approaches f_0 (for $f_N/f_0 \leq 1.4$, as a rule of thumb) which is attractive in narrow transition-band filters, because of the relative cost of high accuracy capacitors. Further application details appear in Part 1 of the series of articles.

Feedforward Notches for $f_N < f_0$

Just as feedforward around an inverting bandpass section yields a notch at the section's f_0 (Figure 11 with $C_{IN1} = 0$), feedforward around an inverting lowpass section causes a notch at zero frequency (which is to say, a highpass response). Moreover, and this is what makes it useful, introducing a capacitor for phase lead moves the notch frequency up from DC, exactly as C_{IN1} in Figure 11 moves the notch frequency up from the center frequency f_0. In Figure 14, the inverting lowpass output (V2) of the Operational Filter block is summed, at a virtual ground, with a fed-forward input signal. Capacitor C_{IN1} shifts the resulting notch frequency, f_N, up from zero, giving a low frequency notch with a highpass shape (Figure 15). The $H_{BR}(s)$ response parameters are now:

$$f_N = f_0\sqrt{1-\left(\frac{R1}{R_{Q1}}\right)\left(\frac{C}{C_{IN1}}\right)\left(\frac{R21}{R_{IN1}}\right)}$$

$$H_N = \frac{R_{GAIN}}{R_{FF2}}$$

The constraint required for exact cancellation of the two paths (i.e., for infinite notch depth) becomes:

$$\frac{R_{IN2}}{R_{FF2}} = \frac{R_{Q1}C_{IN1}}{R1C}$$

R1 and C are the internal precision components (in the LTC1562, 10k and 159pF respectively) as described above in Setting f_0 and Q.

The configuration of Figure 14 is most useful as a lower stopband notch in a bandpass filter, because the resistors R_{IN2} and R_{FF2} can replace the input resistor R_{IN} of a bandpass section made from a second Operational Filter block, as in Figure 6a. The configuration is robust against tolerances in the C_{IN1} value when f_N approaches f_0 (for $f_0/f_N \leq 1.4$, as a rule of thumb) which is attractive in narrow transition-band filters, because of the relative cost of high accuracy capacitors. Further application details appear in Part 2 of the series of articles.

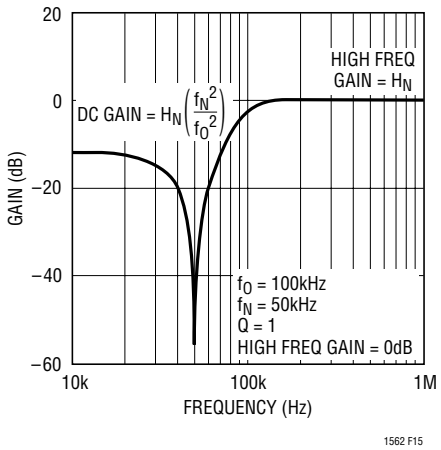

Figure 15. Notch Response with $f_N < f_0$

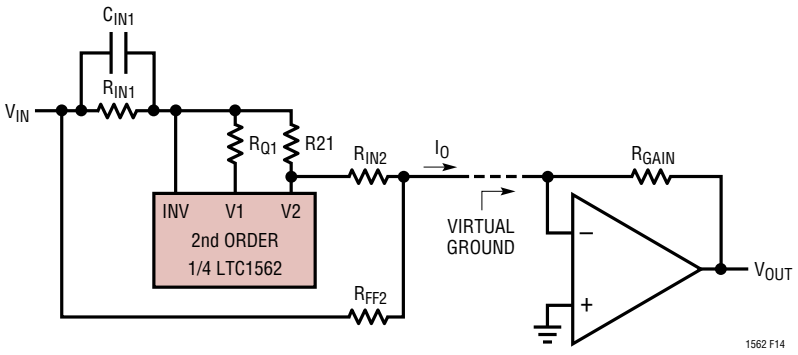

Figure 14. Feedforward Notch Configuration for $f_N < f_0$

APPLICATIONS INFORMATION

R-C Universal Notches

A different way to get 180° phase shift for a notch is to use the built-in 90° phase difference between the two Operational Filter block outputs along with a further 90° from an external capacitor. This method achieves deep notches independent of component matching, unlike the previous techniques, and it is convenient for cascaded highpass as well as lowpass and bandpass filters.

The V2 output of an Operational Filter block is a time-integrated version of V1 (see Figure 3), and therefore lags V1 by 90° over a wide range of frequencies. In Figure 16, a notch response occurs when a 2nd order section drives a virtual-ground input through two paths, one through a capacitor and one through a resistor. Again, the virtual ground may come from an op amp as shown, or from another Operational Filter block's INV input. Capacitor C_N adds a further 90° to the 90° difference between V1 and V2, producing a wideband 180° phase difference, but frequency-dependent amplitude ratio, between currents I_R and I_C. At the frequency where I_R and I_C have equal magnitude, I_0 becomes zero and a notch occurs. This gives a net transfer function from V_{IN} to V_{OUT} in the form of $H_{BR}(s)$ as above, with parameters:

$$f_N = \frac{1}{2\pi\sqrt{R_N C_N R1C}}$$

$$H_N = -\left(\frac{R_{GAIN}}{R_{IN1}}\right)\left(\frac{C_N}{C}\right)$$

$$\text{DC Gain} = \left(\frac{R_{GAIN}}{R_{IN1}}\right)\left(\frac{R21}{R_N}\right)$$

$$\frac{f_0^2}{f_N^2} = \frac{\text{High Frequency Gain}}{\text{DC Gain}} = \frac{R_N C_N}{R21C}$$

R1 and C are the internal precision components (in the LTC1562, 10k and 159pF respectively) as described above in Setting f_0 and Q.

Unlike the notch methods of Figures 11 and 14, notch depth from Figure 16 is inherent, not derived from component matching. Errors in the R_N or C_N values alter the notch frequency, f_N, rather than the degree of cancellation at f_N. Also, the notch frequency, f_N, is independent of the section's center frequency f_0, so f_N can freely be equal to, higher than or lower than f_0 (Figures 12, 13 or 15, respectively) without changing the configuration. The chief drawback of Figure 16 compared to the previous methods is a very practical one—the C_N capacitor value directly scales H_N (and therefore the high frequency gain). Capacitor values are generally not available in increments or tolerances as fine as those of resistors, and this configuration lacks the property of the previous two configurations that sensitivity to the capacitor value falls as f_N approaches f_0. Unlike the previous notch circuits, this one is also noninverting at DC.

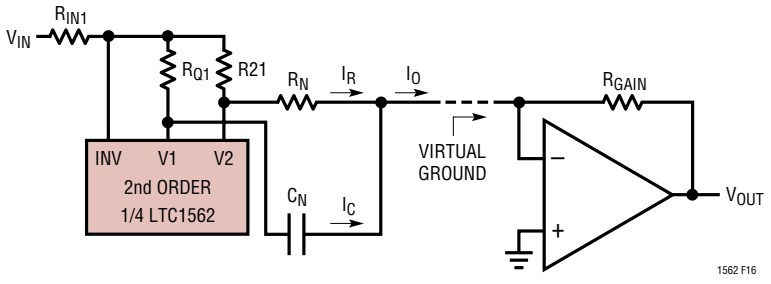

Figure 16. The R-C Universal Notch Configuration for an Operational Filter Block

TYPICAL APPLICATIONS (Advanced)

8th Order 50kHz Lowpass Elliptic Filter with 100dB Stopband Attenuation

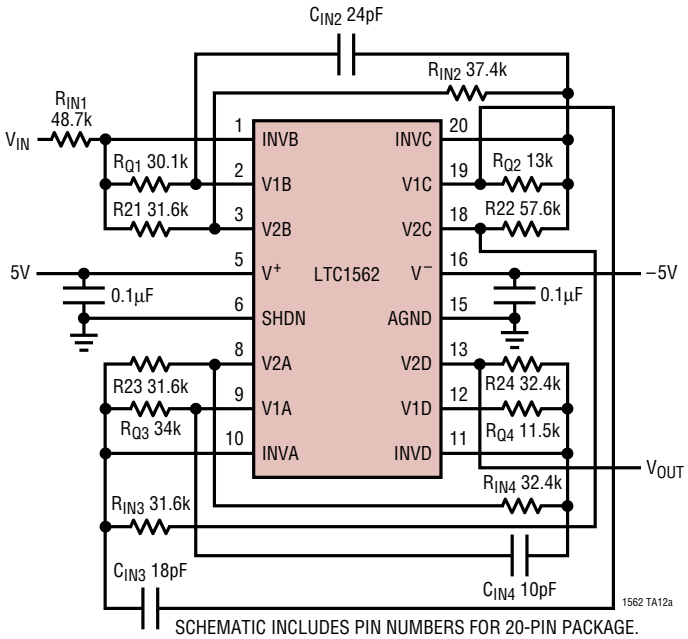

SCHEMATIC INCLUDES PIN NUMBERS FOR 20-PIN PACKAGE.
PINS 4, 7, 14, 17 (NOT SHOWN) ALSO CONNECT TO V^-

Amplitude Response

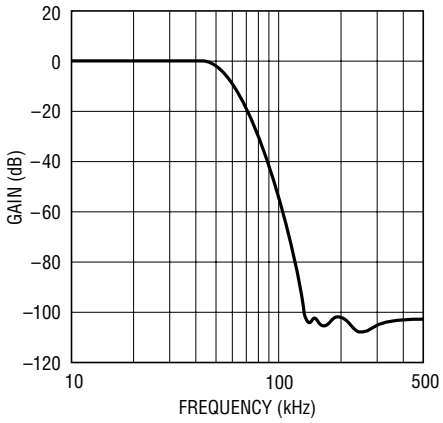

USES THREE R-C UNIVERSAL NOTCHES AT f_N = 133kHz, 167kHz, 222kHz.
DETAILED DESCRIPTION IN LINEAR TECHNOLOGY DESIGN NOTE 195.
WIDEBAND OUTPUT NOISE 60µV_{RMS}

8th Order 100kHz Elliptic Bandpass Filter

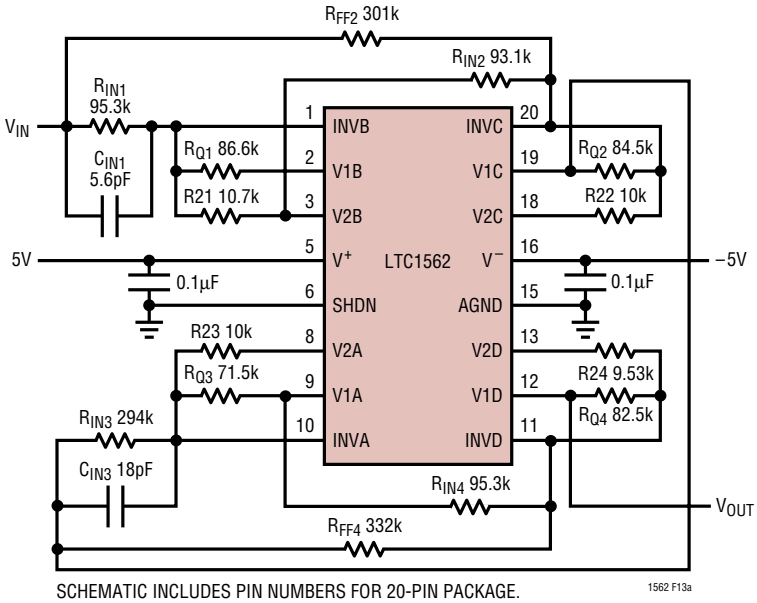

SCHEMATIC INCLUDES PIN NUMBERS FOR 20-PIN PACKAGE.
PINS 4, 7, 14, 17 (NOT SHOWN) ALSO CONNECT TO V^-

Amplitude Response

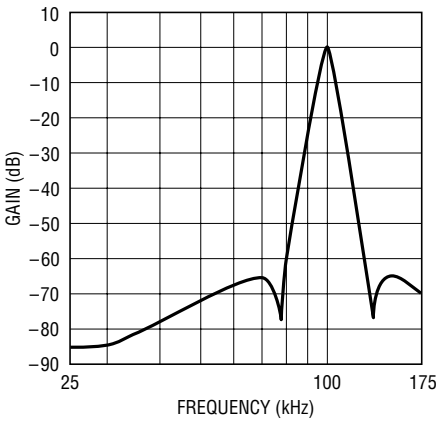

TYPICAL APPLICATIONS (Advanced)

9th Order 22kHz Lowpass Elliptic Filter

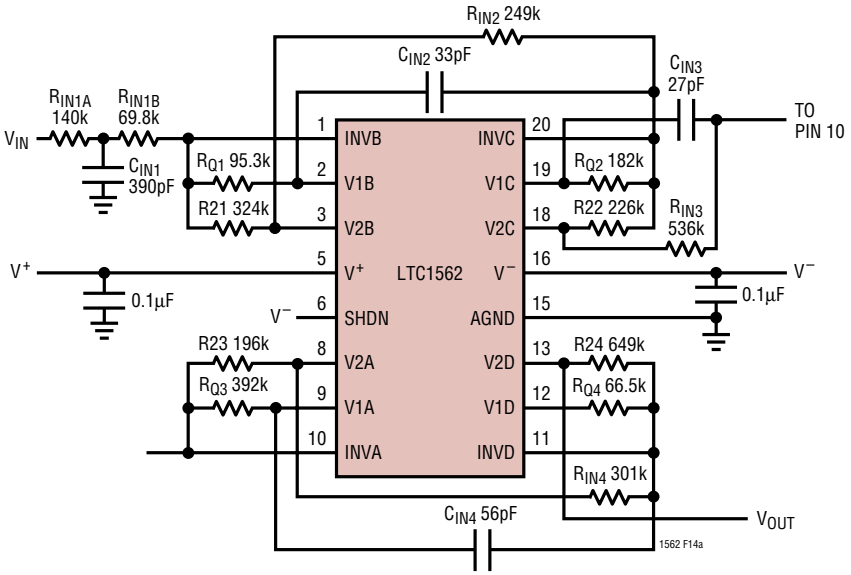

SCHEMATIC INCLUDES PIN NUMBERS FOR 20-PIN PACKAGE.
PINS 4, 7, 14, 17 (NOT SHOWN) ALSO CONNECT TO V^-

Amplitude Response

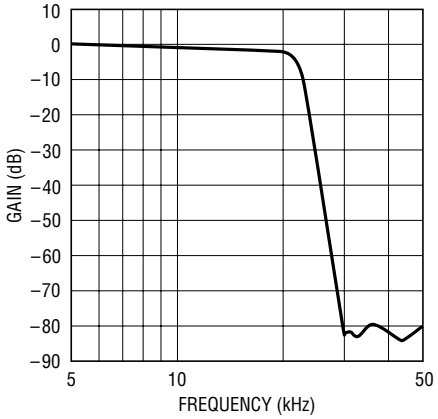

Noise + THD vs Frequency

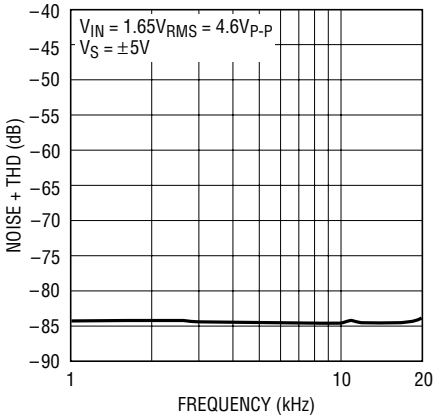

TYPICAL APPLICATIONS (Advanced)

Dual 5th Order Lowpass "Elliptic" Filter

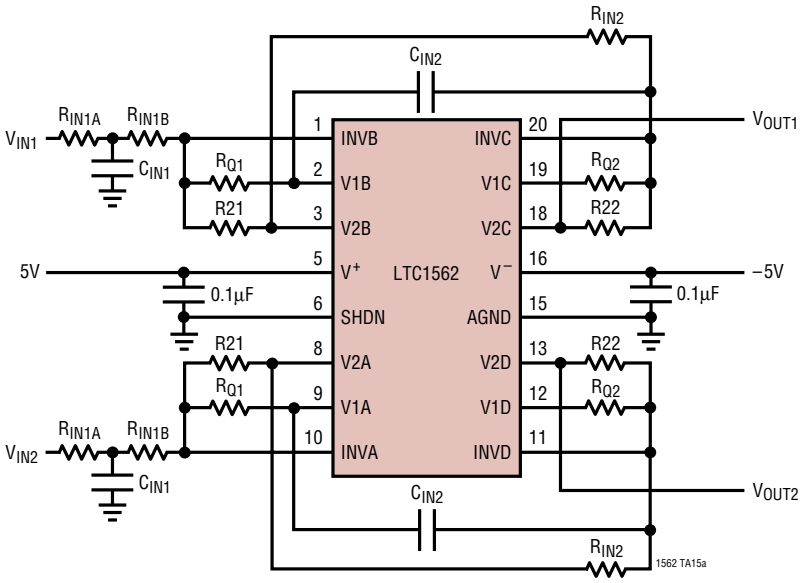

SCHEMATIC INCLUDES PIN NUMBERS FOR 20-PIN PACKAGE.
PINS 4, 7, 14, 17 (NOT SHOWN) ALSO CONNECT TO V^-

Amplitude Response

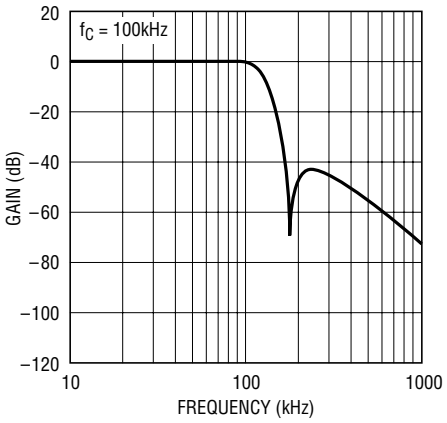

f_C (Hz)	R_{IN1A}	R_{IN1B}	C_{IN1}	R_{Q1}	R21	R_{IN2}	C_{IN2}	R_{Q2}	R22
100k	5.9k	7.5k	680pF	28k	7.5k	6.34k	68pF	9.31k	11.3k
75k	8.06k	15.4k	560pF	36.5k	13.3k	11.3k	68pF	12.7k	20k
50k	16.9k	35.7k	390pF	56.2k	30.1k	25.5k	68pF	18.7k	44.2k

Construction and Instrumentation Cautions

100dB rejections at hundreds of kilohertz require electrically clean, compact construction, with good grounding and supply decoupling, and minimal parasitic capacitances in critical paths (such as Operational Filter block INV inputs). In a circuit with 5k resistances trying for 100dB rejection at 100kHz, a stray coupling of 0.003pF around the signal path can preclude the 100dB. (By comparison, the stray capacitance between two adjacent pins of an IC can be 1pF or more.) Also, high quality supply bypass capacitors of 0.1µF near the chip provide good decoupling from a clean, low inductance power source. But several inches of wire (i.e., a few microhenrys of inductance) from the power supplies, unless decoupled by substantial capacitance (≥10µF) near the chip, can cause a high-Q LC resonance in the hundreds of kHz in the chip's supplies or ground reference, impairing stopband rejection and other specifications at those frequencies. In demanding filter circuits we have often found that a compact, carefully laid out printed circuit board with good ground plane makes a difference of 20dB in both stopband rejection and distortion performance. Highly selective circuits can even exhibit these issues at frequencies well below 100kHz. Finally, equipment to measure filter performance can itself introduce distortion or noise floors; checking for these limits with a wire replacing the filter is a prudent routine procedure.

PACKAGE DESCRIPTION

G Package
20-Lead Plastic SSOP (5.3mm)
(Reference LTC DWG # 05-08-1640)

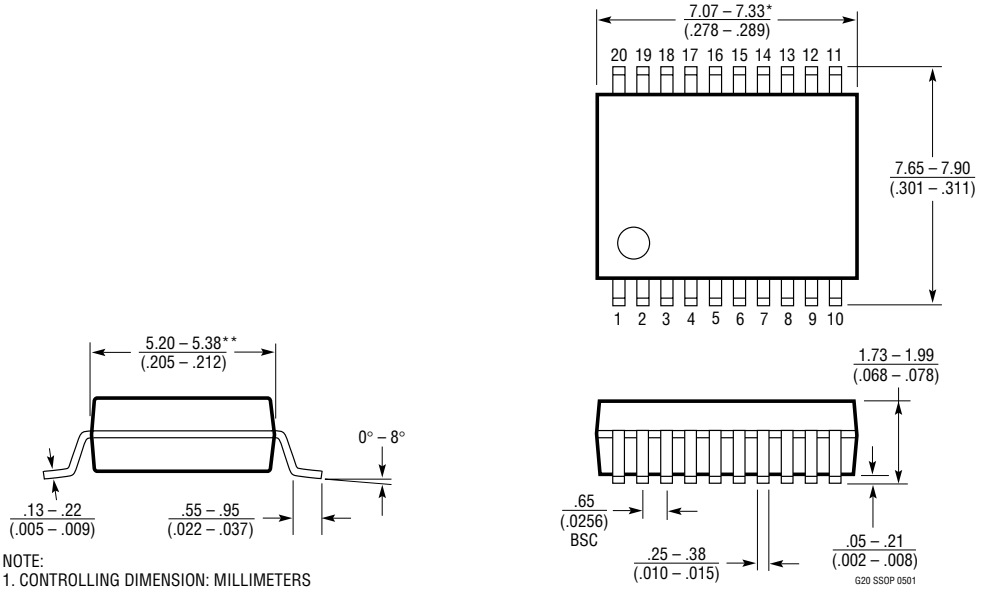

NOTE:
1. CONTROLLING DIMENSION: MILLIMETERS
2. DIMENSIONS ARE IN $\frac{\text{MILLIMETERS}}{(\text{INCHES})}$
3. DRAWING NOT TO SCALE
*DIMENSIONS DO NOT INCLUDE MOLD FLASH. MOLD FLASH SHALL NOT EXCEED .152mm (.006") PER SIDE
**DIMENSIONS DO NOT INCLUDE INTERLEAD FLASH. INTERLEAD FLASH SHALL NOT EXCEED .254mm (.010") PER SIDE

N Package
16-Lead PDIP (Narrow .300 Inch)
(Reference LTC DWG # 05-08-1510)

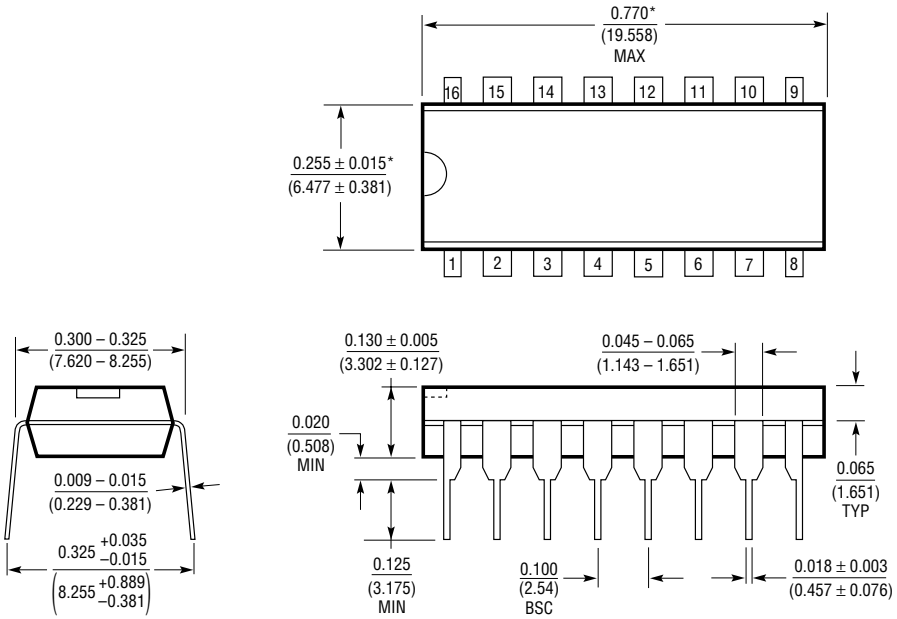

*THESE DIMENSIONS DO NOT INCLUDE MOLD FLASH OR PROTRUSIONS.
MOLD FLASH OR PROTRUSIONS SHALL NOT EXCEED 0.010 INCH (0.254mm)

N16 1098

Information furnished by Linear Technology Corporation is believed to be accurate and reliable. However, no responsibility is assumed for its use. Linear Technology Corporation makes no representation that the interconnection of its circuits as described herein will not infringe on existing patent rights.

TYPICAL APPLICATION

Dual 4th Order 12dB Gaussian Lowpass Filter

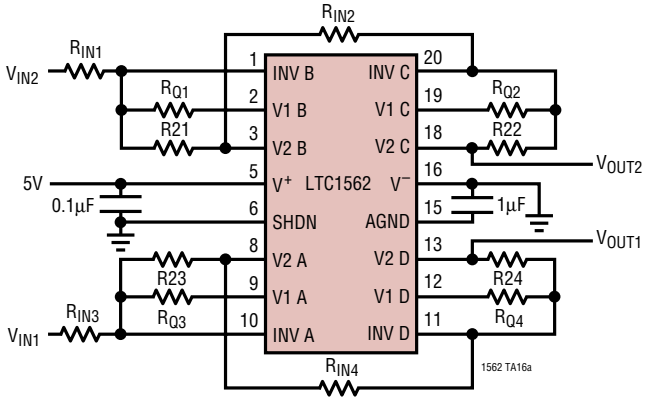

SCHEMATIC INCLUDES PIN NUMBERS FOR 20-PIN PACKAGE.
PINS 4, 7, 14, 17 (NOT SHOWN) ALSO CONNECT TO V^-

Amplitude Response

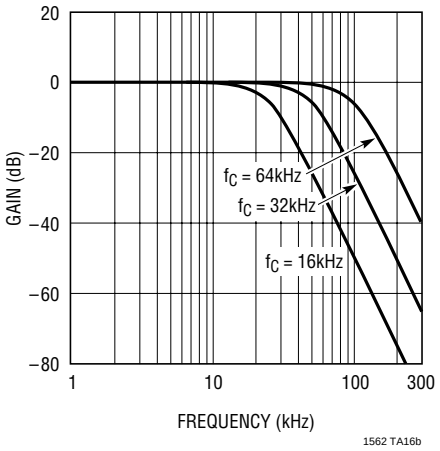

4-Level Eye Diagram
f_C = 16kHz, Data Clock = 32kHz

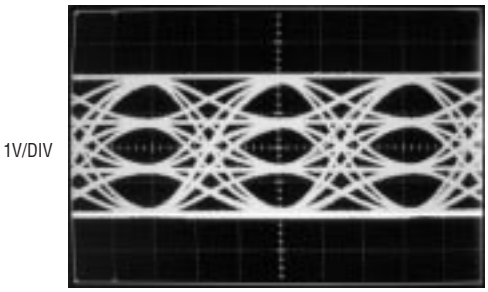

f_C (Hz)	$R_{IN1} = R_{IN3}$	R21 = R23	$R_{Q1} = R_{Q3}$	$R_{IN2} = R_{IN4}$	R22 = R24	$R_{Q2} = R_{Q4}$
16k	105k	105k	34k	340k	340k	34k
32k	26.1k	26.1k	16.9k	84.5k	84.5k	16.9k
64k	8.45k	6.49k	8.45k	16.2k	21k	8.45k

RELATED PARTS

PART NUMBER	DESCRIPTION	COMMENTS
LTC1068, LTC1068-X	Quad 2-Pole Switched Capacitor Building Block Family	Clock-Tuned
LTC1560-1	5-Pole Elliptic Lowpass, f_C = 1MHz/0.5MHz	No External Components, SO8
LTC1562-2	Quad 2-Pole Active RC, 20kHz to 300kHz	Same Pinout as the LTC1562
LTC1563-2/LTC1563-3	4th Order Active RC Lowpass Filters	$f_{CUTOFF(MAX)}$ = 256kHz, Resistor Programmable
LTC1564	10kHz to 150kHz Digitally Controlled Filter and PGA	Continuous Time Low Noise 8th Order with PGA
LTC1565-31	650kHz Continuous Time, Linear Phase Lowpass Filter	7th Order, Differential Inputs and Outputs
LTC1566-1	2.3MHz Continuous Time Lowpass Filter	7th Order, Differential Inputs and Outputs

Linear Technology Corporation
1630 McCarthy Blvd., Milpitas, CA 95035-7417
(408) 432-1900 • FAX: (408) 434-0507 • www.linear.com
LT/TP REV A 0102 1.5K • PRINTED IN USA
© LINEAR TECHNOLOGY CORPORATION 1998

Looking for pricing, stock, or lifecycle information?

Click below to explore more details on WIN SOURCE:

- View LTC1562IG#TRPBF on WIN SOURCE
- Linear Technology Information

Optimize Your Supply Chain with WIN SOURCE Solutions

- Global Sourcing Solution
- Obsolete Management
- Cost Control Management
- Shortage Management
- Alternative Solution
- Excess Inventory Management