LSI/CSI = LS7641

LSI Computer Systems, Inc. 1235 Walt Whitman Rd, Melville, NY 11747 (631)271-0400, Fax: (631)271-0404

May 2024

REVERSE PHASE (TRAILING-EDGE) LIGHT DIMMER FOR LED LAMPS

FEATURES:

- For use in wall switch dimmers driving ceiling lamps.
- Efficient dimming control for both LED and incandescent bulbs.
- Eliminates RFI associated with triac dimmers.
- Continuous analog dimming steps from 0 to 100% brightness.
- Achieves flicker free ultralow brightness for LED bulbs unachievable with triac dimmers.
- Overcurrent sense input for safety shutdown.
- Adjustable turn-on angle for compatibility with light bulbs of different characteristics.
- 50Hz/60Hz operation.
- 5V supply.
- Available in SOIC-14 and TSSOP-14.

APPLICATIONS:

- Wall switch LED and incandescent light dimmers

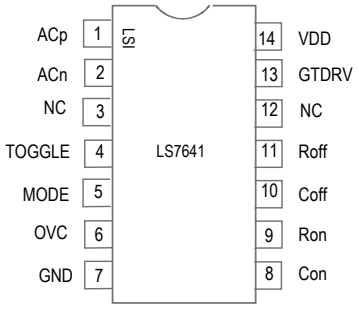

Fig 1

GENERAL DESCRIPTION:

LS7641 is a monolithic CMOS lamp dimmer designed for wall switch applications driving LED and incandescent lamps. It uses reverse phase dimming technology wherein the brightness of a lamp is controlled by controlling the duty cycle of the on state by varying the turn-off angle of a MOSFET driving the lamp during ac half cycles. This is in contrast with triac dimming technology wherein the duty cycle is controlled by varying the turn-on angle. There are several advantages of reverse phase dimming over conventional triac dimming when comes to LED bulbs. The following problems associated with triac dimming of LED lightings are eliminated when using reverse phase methodology:

- Current spikes during turn-on resulting in acoustic and RFI noise.
- Failure of triac to latch due to delay between trigger signal and load converter oscillation start.
- Failure of triac to maintain latch at low LED brightness levels due to insufficient holding current.

LS7641 is capable of adjusting both turn-on and turn-of angles of an external MOSFET driving the lamp. Adjustability of turn-on angle is intended to meet the varying requirements of varying types of lamps. Once set with an external trim-pot the turn-on angle should remain fixed for the specific type of lamp. The dimming is controlled with an external rotary or sliding potentiometer which controls the turn-off angle of the external MOSFET.

An overcurrent sense input is provided for instantaneous shut down of the output in case of a short or overload.

A mode input is provided to select between powering up in the OFF state or in the ON state. While powered up, the on/off state of the lamp can be toggled with a momentary push-button switch without shutting off the power.

INPUTS/OUTPUTS:

ACp (pin 1) Input. AC neutral side sync input. ACn and ACp inputs together detect ac zero-cross point. Output conduction angle and thereby the brightness level is controlled with the turn-on and turn-off angles of an external MOSFET with respect to zero-cross point.

ACn (pin 2) Input. AC hot side sync input. ACn and ACp inputs together detect ac zero-cross point. Output conduction angle and thereby the brightness level is controlled with the turn-on and turn-off angles of an external MOSFET with respect to zero-cross point.

TOGGLE (pin 4) Input. This input controls the GTDRV output on/off state. When the input is held low for >100ms the output toggles state. For every actuation of the TOGGLE input the GTDRV output toggles once. This input has an internal pull-up.

MODE (pin 5) Input. When this input is tied low the lamp powers up in the ON state. When the input is tied high or left floating, the lamp powers up in the off state. The input has an internal pull-up. After powering up there is a delay of 32 ac cycles before the lamp is turned on. This delay allows for the power supply to stabilize and produce a flicker free turn on of the lamp.

OVC (pin6) Input. This input can be used to sense an overload current condition and shut down the output instantaneously. Voltage generated across a fractional Ohm resistor in series with the load is applied to the OVC input for sensing the overcurrent condition. The resistor R is calculated as follows:
R = (300mV)/Imax, Where Imax = permitted maximum load current. The GTDRV output is switched off (low) when the load current exceeds Imax and enabled again at the next zero-cross point.

Con (pin 8) Input, **Ron** (pin 9) Output. An external capacitor, Cn and an external resistor, Rn connected to these two pins sets the turn-on delay relative to the zero-cross point. The GTDRV output switches high at the completion of turn-on delay turning on the load lamp. The turn-on delay is calculated by: Tgn = 1.25 x Rn x Cn.

Note. For proper functioning of the chip, Tgn must be set to a minimum value of 6us (Rn = 10K, Cn = 500pF).

Coff (pin 10) Input, **Roff** (pin 11) Output. An external capacitor, Cf and an external resistor, Rf connected to these two pins sets the turn-off delay relative to the turn-on delay. The GTDRV output switches low at the completion of turn-off delay turning off the load lamp.

The turn-off delay, Tgf = 1.25 x Rf x Cf.
The turn-off delay, relative to zero cross point, Tfz = Tgn + Tgf.
Effective Conduction angle, Φc =2 x fac x 180° x (Tgf – Tgn), where fac = ac line frequency.
% Duty cycle =(Φc/180) x 100.

GTDRV (pin13) Output. During the ON state GTDRV output stays high between the Tgn and Tgf interval turning on an external MOSFET in series with the load lamp. The lamp brightness is varied by varying the turn-off delay Tgf, thereby varying the conduction angle Φc.

GTDRV output can be toggled between enable and disable by applying a logic low at the TOGGLE input for > 100ms.

VDD (pin 14). Supply voltage positive.

GND (pin 7). Supply voltage ground.

ABSOLUTE MAXIMUM RATINGS:
(All voltages are referenced to GND; T_A = +25°C)

Supply Voltage……...-0.3V to +7V
ACn input voltage……-1.0V to +90V **
ACp input voltage……-1.0V to +90V **
All other input voltages…….-0.3V to VDD+0.3V
Operating temperature……. -40°C to +85°C
Storage temperature…… -65°C to +150°C

**Direct voltage without current limiting series resistors.

ELECTRICAL CHARASTERISTICS; VDD = 5V, T_A = 25°C unless specified otherwise

Parameter	Symbol	Min	Typ	Max	Unit	Condition
Supply Voltage	VDD	3.0	-	5.5	Volt	
Supply Current	Idd	-	130	150	uA	Ron = Roff =50K
ACn and ACp differential voltage for zero-cross detection	Vsz	-	±70	±110	mV	
Input low: MODE	Vml	1.4	1.8	-	Volt	
Input high: MODE	Vmh	-	1.8	2.2	Volt	
Input low: TOGGLE	Vtl	1.4	1.8	-	Volt	
Input high: TOGGLE	Vth	-	1.8	2.2	Volt	
OVC sense level	Vovc	270	300	330	mV	
Input low: Con, Coff	Vcl	-	1.7	-	Volt	
Input high: Con, Coff	Vch	-	3.5	-	Volt	
Input hysteresis: Con, Coff	Vchys	-	1.8	-	Volts	
Output source: Ron, Roff	Irh	-	-1.0	-	mA	@Vout = 4.4V
Output sink: Ron, Roff	Irl	-	1.0	-	mA	@Vout = 0.5V
Output source: GTDRV	Igh	-	-5.0	-	mA	@Vout = 4.5V
Output sink: GTDRV	Igl	-	6.0	-	mA	@Vout = 0.5V
Input current: MODE, TOGGLE	Imtl	7.0	9.0	11.0	uA	@Vi = 0.5V
	Imth	0.8	1.0	1.2	uA	@Vi = 4.5V
Input current: ACn, ACp	Iacl	-240	-300	-360	nA	@Vi = -1V
	Iach	34	42	50	uA	@Vi = 80V

TRANSIENT CHARASTERISTICS; VDD = 5V, T_A = 25°C unless specified otherwise						
Parameter	**Symbol**	**Min**	**Typ**	**Max**	**Unit**	**Condition**
GTDRV output turn-on delay from zero-cross	Tgn	6	-	-	uS	Rn = 10K, Cn = 500pF
GTDRV output on time	Tgf	-	-	1/2fac	mS	fac = AC line frequency
GTDRV output turn-off delay from zero-cross	Tfz	-	Tgn + Tgf	-	ms	
TOGGLE input activation time	Ttg	5/fac	-	6/fac		fac = AC line frequency
GTDRV output enable delay after power-up	Tgp	31/fac	-	32/fac		fac = AC line frequency

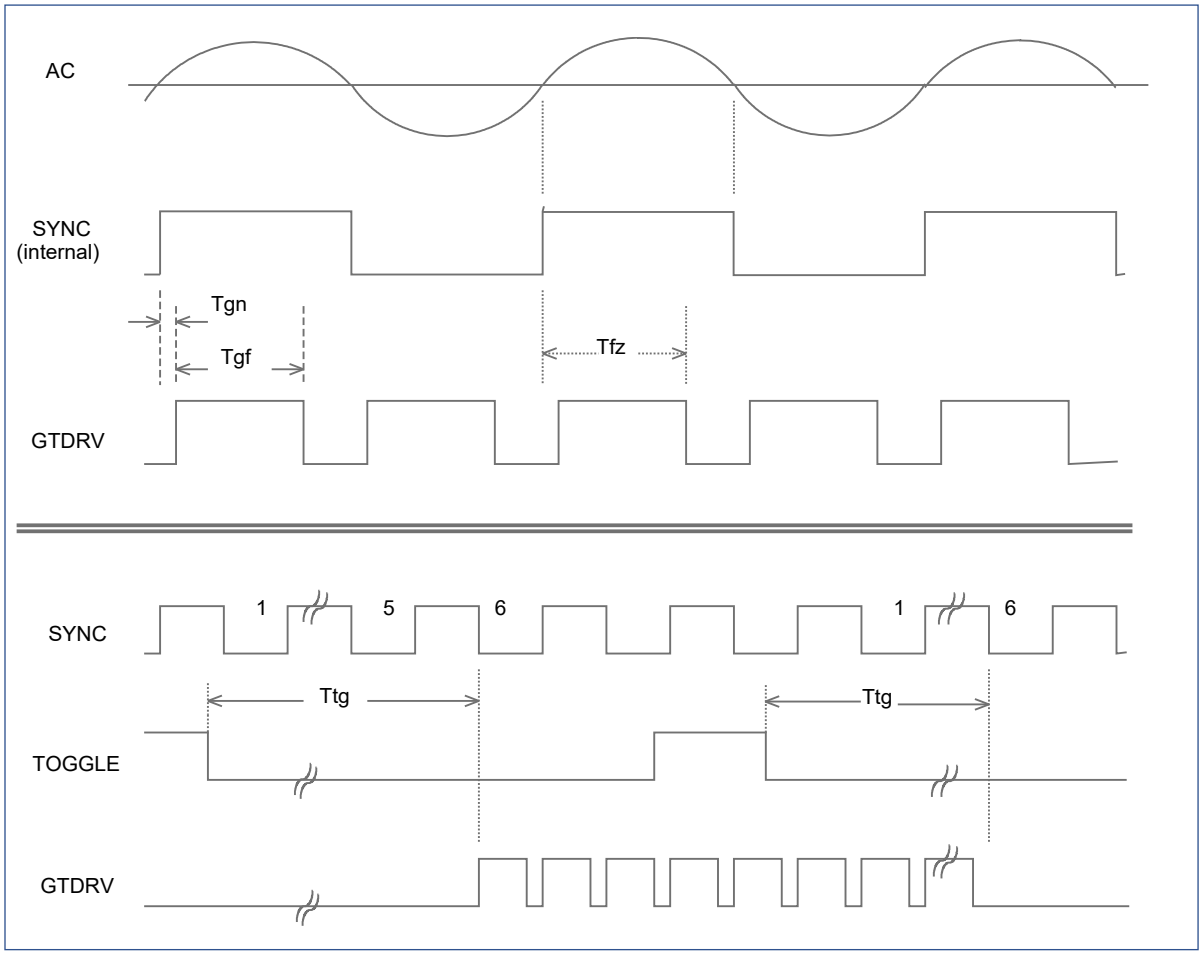

Fig. 2. Transient parameters

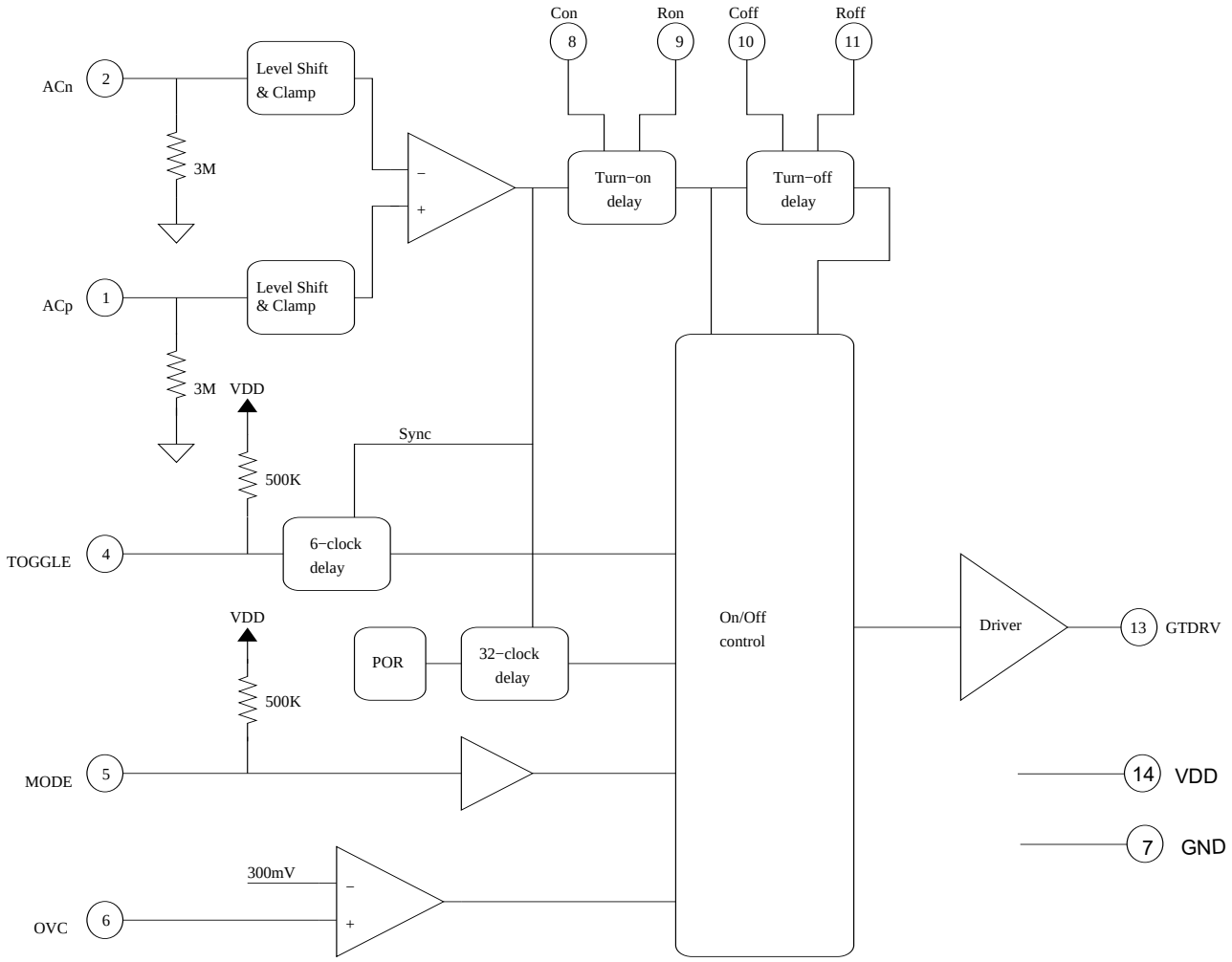

Note. All inputs have ESD protection circuit; not shown in the diagram.

Fig 3. LS7641 Block Diagram

The information included herein is believed to be accurate and reliable. However, LSI Computer Systems, Inc. assumes no responsibilities for inaccuracies, or for any infringements of patent rights of others which may result from its use

WALL DIMMER SWITCH

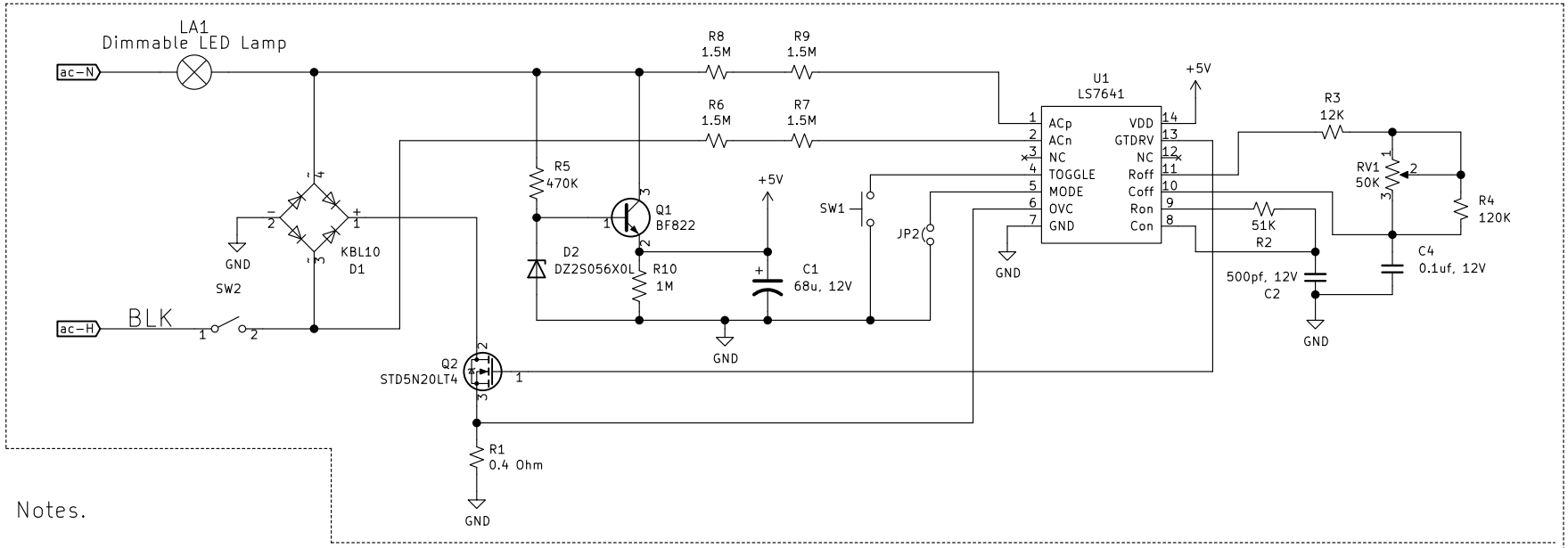

Notes.

1. R1 sets the limit for over-current at 300mV/0.4 = 750mA

2. R2 and C2 together sets the turn-on delay with respect to zero-cross at 32us.
   A trimpot can be used for R2 for adjustability as needed for different types of bulbs.

3. R3, RV1 and C4 together sets the turn-off delay.
   Lower limit of the delay = 1.25 x 12K x 0.1u = 1.5ms. (32 degrees @ 60Hz) .
   Upper limit of the delay = 1.25 x 47K x 0.1u = 5.9ms. (127 degrees @ 60Hz).
   R3 can be replaced with a trimpot for setting the minimum dim level.
   Brightness level is controlled with RV1 which can be either a sliding or a rotary pot.

4. The component values are shown for 120VAC, 60Hz application.
   Following adjustments are needed for 240VAC, 50Hz applications:
   R5 = 820K; R6 = R7 = R8 = R9 = 3M; R4 = 750K,
   Q1 = FJV42 or equivalent; Q2 = TSM4NC50CP or equivalent

5. Momentary push-button switch SW1 is used for toggling the light between on and off.

6. All resistors are 0.25W unless specified otherwise.

Fig4. LS7641 Application

Sheet: /		
Size: A	Date:	**Rev:**
LSI/CSI		Id: 1/1

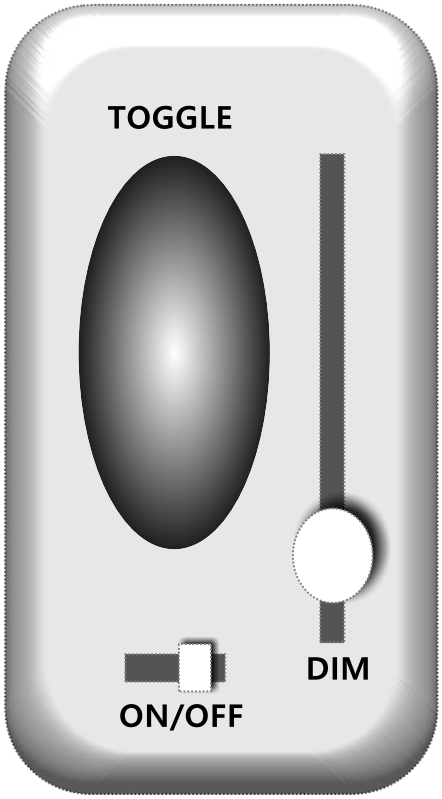

Fig 5

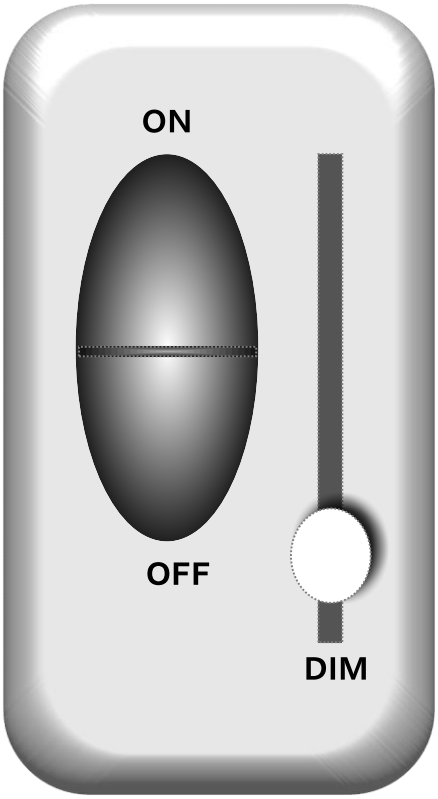

Fig 6

Fig 5 and Fig 6 are examples of wall switch dimmers. The "ON/OFF" switches in fig 5 and 6 correspond to SW2 in fig 4. In fig 5 it is a SPST slide switch and fig 6 it is a rocker switch. The "TOGGLE" switch in fig 5 corresponds to the momentary switch SW1 in fig 4 . The potentiometer RV1 in fig 4 corresponds to the sliding potentiometer labeled "DIM".

In fig 5 the ON/OFF switch is used for turning the power on or off to the dimmer unit. When powered the alternate pressing of the TOGGLE switch causes the lamp to turn on or off. The brightness of the lamp is controlled by the sliding potentiometer DIM.

In fig 6 there is no TOGGLE switch. Instead the lamp is turned on and off with the ON/OFF power switch.

SOIC PACKAGE DRAWING

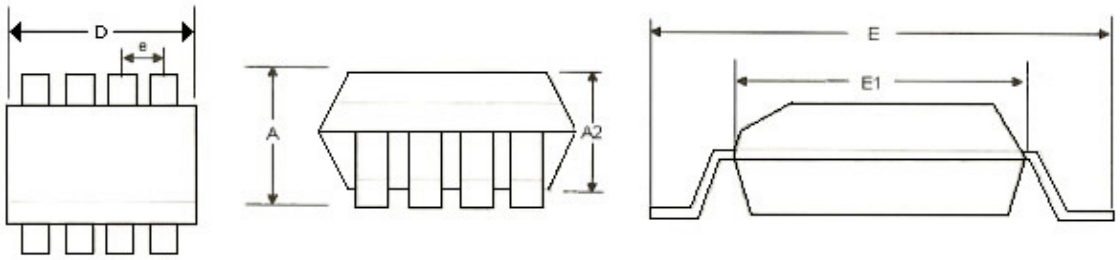

Inches						
	e	E1	D	E	A	A2
SOIC-14	0.050 BSC	0.153	0.340	0.236	0.069	0.049
mm						
SOIC-14	1.27 BSC	3.90 BSC	8.65	6.00	1.75 max	1.25 max

TSSOP PACKAGE OUTLINE DRAWINGS

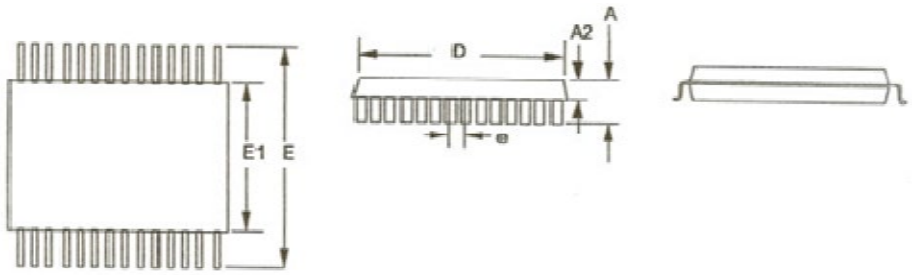

Inches						
	e	E1	D	E	A	A2
TSSOP-14	0.0256 BSC	0.173	0.196	0.252	0.047	0.039
mm						
TSSOP-14	0.65 BSC	4.40	5.0	6.4	1.20 max	1.0

Looking for pricing, stock, or lifecycle information?

Click below to explore more details on WIN SOURCE:

- View LS7641 on WIN SOURCE
- LSI Computer Systems Information

Optimize Your Supply Chain with WIN SOURCE Solutions

- Global Sourcing Solution
- Obsolete Management
- Cost Control Management
- Shortage Management
- Alternative Solution
- Excess Inventory Management