# THE DATASHEET OF

# DG202CJ

19-3960; Rev 3; 6/06

# Quad SPST CMOS Analog Switches



## General Description

The DG202/DG212 are normally open, quad single-pole single-throw (SPST) analog switches. These CMOS switches can be continuously operated with power supplies ranging from ±4.5V to ±18V. Maxim guarantees that these switches will not latch up if the power supplies are disconnected with input signals still connected.

The DG202/DG212 are similar to the DG201/DG211 except for inverted control inputs. All devices have guaranteed break-before-make switching, as well as essentially constant on-resistance over the analog signal range. All switches conduct current in either direction and add no offset to the output signal.

Compared to the original manufacturer's products, Maxim's DG202/DG212 consume very little power, making them better suited for portable applications. Maxim has also eliminated the need for the third logic power supply ($V_L$) that is required for the operation of the original manufacturer's DG212 without sacrificing compatibility.

## Applications

Analog Multiplexers

Programmable Gain Amplifiers

Communications Systems

Sample/Holds

Automatic Test Equipment

PBX, PABX

## Features

- **Guaranteed ±4.5V to ±18V Operation**
- **No $V_L$ Supply Required**
- **Nonlatching with Supplies Turned Off and Input Signals Present**
- **CMOS and TTL Logic Compatible**
- **Monolithic, Low-Power CMOS Design**

## Ordering Information

| PART | TEMP RANGE | PIN-PACKAGE |
|---|---|---|
| **DG202**CUE | 0°C to +70°C | 16 TSSOP |
| DG202CSE | 0°C to +70°C | 16 SO |
| DG202CJ | 0°C to +70°C | 16 Plastic DIP |
| DG202C/D | 0°C to +70°C | Dice |
| DG202AEGE | -40°C to +85°C | 16 QFN (5mm x 5mm) |
| DG202AEUE | -40°C to +85°C | 16 TSSOP |
| DG202ADY | -40°C to +85°C | 16 SO |
| DG202ADJ | -40°C to +85°C | 16 Plastic DIP |
| DG202AK | -55°C to +125°C | 16 CERDIP |
| **DG212**CUE | 0°C to +70°C | 16 TSSOP |
| DG212CSE | 0°C to +70°C | 16 SO |
| DG212CJ | 0°C to +70°C | 16 Plastic DIP |
| DG212C/D | 0°C to +70°C | Dice |
| DG212EGE | -40°C to +85°C | 16 QFN (5mm x 5mm) |
| DG212EUE | -40°C to +85°C | 16 TSSOP |
| DG212DY | -40°C to +85°C | 16 SO |
| DG212DJ | -40°C to +85°C | 16 Plastic DIP |
| DG212ETE | -40°C to +85°C | 16 Thin QFN |

## Typical Operating Circuit

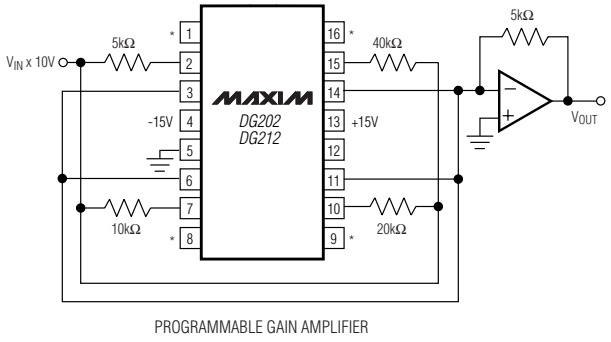


PROGRAMMABLE GAIN AMPLIFIER

**NOTE:** *PINS 1, 8, 9, AND 16 ARE LOGIC CONTROL INPUTS

## Pin Configurations

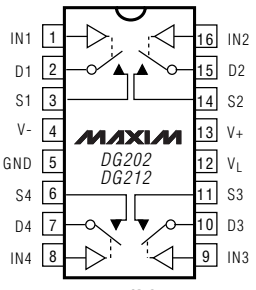


**DIP/SO**

| LOGIC | SWITCH |
|---|---|
| 0 | OFF |
| 1 | ON |

SWITCHES SHOWN FOR LOGIC "0" INPUT

*Pin Configurations continued at end of data sheet.*



**For pricing, delivery, and ordering information, please contact Maxim/Dallas Direct! at 1-888-629-4642, or visit Maxim's website at www.maxim-ic.com.**

# Quad SPST CMOS Analog Switches

## ABSOLUTE MAXIMUM RATINGS (DG212)

V+ to V-.....44V
$V_{IN}$ to Ground.....V-, V+
$V_L$ to Ground.....-0.3V, 25V
$V_S$ or $V_D$ to V+.....0, -40V
$V_S$ or $V_D$ to V-.....0, 40V
V+ to Ground.....25V
V- to Ground.....-25V
Current, Any Terminal Except S or D.....30mA
Continuous Current, S or D.....20mA
Peak Current, S or D
(pulsed at 1ms 10% duty cycle max).....70mA
Storage Temperature Range.....-65°C to +125°C

Operating Temperature Range
DG212C.....0°C to +70°C
DG212D/E.....-40°C to +85°C
Power Dissipation ($T_A$ = +70°C) (Note 1)
16-Pin Plastic Dip (derate 10.5mW/°C above +70°C) ..842mW
16-Pin Narrow SO (derate 8.7mW/°C above+70°C). ....696mW
16-Pin TSSOP (derate 9.4mW/°C above +70°C) .....755mW
16-Pin QFN (5mm x 5mm)
(derate 19.2mW/°C above +70°C).....1538mW
16-Pin Thin QFN
(derate 14.7mW/°C above +70°C).....1177mW

**Note 1:** Device mounted with all leads soldered to PC board.

*Stresses beyond those listed under "Absolute Maximum Ratings" may cause permanent damage to the device. These are stress ratings only, and functional operation of the device at these or any other conditions beyond those indicated in the operational sections of the specifications is not implied. Exposure to absolute maximum rating conditions for extended periods may affect device reliability.*

## ELECTRICAL CHARACTERISTICS (DG212)

(V+ = +15V, V- = -15V, GND = 0, $T_A$ = +25°C, unless otherwise noted.) (For more information on TYP values see Note 2.)

| PARAMETER | SYMBOL | CONDITIONS | | MIN | TYP | MAX | UNITS |
|---|---|---|---|---|---|---|---|
| **SWITCH** | | | | | | | |
| Analog Signal Range | $V_{ANALOG}$ | | | -15 | | +15 | V |
| Drain-Source ON-Resistance | $R_{DS\ (ON)}$ | $V_D$ = ±10V, $V_{IN}$ = 2.4V, $I_S$ = 1mA | | | 115 | 175 | Ω |
| Source OFF-Leakage Current | $I_{S\ (OFF)}$ | $V_{IN}$ = 0.8V | $V_S$ = 14V, $V_D$ = -14V | | 0.01 | 5.0 | nA |
| | | | $V_S$ = -14V, $V_D$ = 14V | -5.0 | -0.02 | | |
| Drain OFF-Leakage Current | $I_{D\ (OFF)}$ | $V_{IN}$ = 0.8V | $V_S$ = 14V, $V_D$ = -14V | | 0.01 | 5.0 | |
| | | | $V_S$ = -14V, $V_D$ = 14V | -5.0 | -0.02 | | |
| Drain ON-Leakage Current (Note 3) | $I_{D\ (ON)}$ | $V_S$ = $V_D$ = 14V, $V_{IN}$ = 2.4V | | | 0.1 | 5.0 | |
| | | $V_S$ = $V_D$ = -14V, $V_{IN}$ = 2.4V | | -5.0 | -0.15 | | |
| **INPUT** | | | | | | | |
| Input Current with Input Voltage High | $I_{INH}$ | $V_{IN}$ = 2.4V | | -1.0 | -0.0004 | | µA |
| | | $V_{IN}$ = 15V | | | 0.003 | 1.0 | |
| Input Current with Input Voltage Low | $I_{INL}$ | $V_{IN}$ = 0 | | -1.0 | -0.0004 | | |
| **DYNAMIC** | | | | | | | |
| Turn-ON Time | $t_{ON}$ | See Switching Time Test Circuit $V_S$ = 2V, $R_L$ = 1kΩ, $C_L$ = 35pF | | | 460 | 1000 | ns |
| Turn-OFF Time | $t_{OFF1}$ | | | | 360 | 500 | |
| | $t_{OFF2}$ | | | | 450 | | |
| Source OFF-Capacitance | $C_{S\ (OFF)}$ | $V_S$ = 0, $V_{IN}$ = 0, f = 1MHz | | | 5 | | pF |
| Drain OFF-Capacitance | $C_{D\ (OFF)}$ | $V_D$ = 0, $V_{IN}$ = 0, f = 1MHz | | | 5 | | |
| Channel ON-Capacitance | $C_{D\ +\ S\ (ON)}$ | $V_D$ = $V_S$ = 0, $V_{IN}$ = 5V, f = 1MHz | | | 16 | | |
| OFF-Isolation (Note 4) | OIRR | $V_{IN}$ = 0, $R_L$ = 1kΩ, $C_L$ = 15pF, $V_S$ = 1VRMS, f = 100kHz | | | 70 | | dB |
| Crosstalk (Channel to Channel) | CCRR | | | | 90 | | |

## ELECTRICAL CHARACTERISTICS (DG212) (continued)

(V+ = +15V, V- = -15V, GND = 0, $T_A$ = +25°C, unless otherwise noted.) (For more information on TYP values see Note 2.)

| PARAMETER | SYMBOL | CONDITIONS | MIN | TYP | MAX | UNITS |
|---|---|---|---|---|---|---|
| **SUPPLY** | | | | | | |
| Positive Supply Current | I+ | $V_{IN}$ = 0 and 2.4V (all) | | 0.02 | 0.4 | mA |
| Negative Supply Current | I- | | | 0.01 | 0.4 | |
| Logic Supply Current | $I_L$ | | | 0 | 0 | |
| Power-Supply Range for Continous Operation | $V_{OP}$ | | ±4.5 | | ±18.0 | V |

**Note 2:** Typical values are for DESIGN AID ONLY, not guaranteed nor subject to production testing.
**Note 3:** $I_{D(ON)}$ is leakage from driver into "ON" switch.
**Note 4:** OFF-Isolation = 20 log $V_S/V_D$, $V_S$ = input to OFF switch, $V_D$ = output.

## ABSOLUTE MAXIMUM RATINGS (DG202)

Voltages Reference to V-
V+.....44V
GND.....25V
Digital Inputs (Note 1), $V_S$, $V_D$.....-2V to (V+ + 2V)
or 20mA, whichever occurs first
Current, Any Terminal Except S or D.....30mA
Continuous Current, S or D.....20mA
Peak Current, S or D
(pulsed at 1ms 10% duty cycle max).....70mA

Operating Temperature Range
DG202C .....0°C to +70°C
DG202D/E.....-40°C to +85°C
DG202A .....-55°C to +125°C
Storage Temperature Range.....-65°C to +150°C
Power Dissipation (Note 2)
16-Pin Plastic Dip (derate 10.5mW/°C above +70°C) ...842mW
16-Pin SO (derate 8.7mW/°C above +70°C) .....696mW
16-Pin TSSOP (derate 9.4mW/°C above +70°C).....755mW
16-Pin QFN (5 × 5)
(derate 19.2mW/°C above +70°C).....1538mW
16-Pin CERDIP (derate 10.0mW/°C above +70°C).....800mW

**Note 1:** Signals on S_, D_, or IN_ exceeding V+ or V- on Maxim's DG202 will be clamped by internal diodes, and are also internally current limited to 25mA.
**Note 2:** Device mounted with all leads soldered to PC board.

*Stresses beyond those listed under "Absolute Maximum Ratings" may cause permanent damage to the device. These are stress ratings only, and functional operation of the device at these or any other conditions beyond those indicated in the operational sections of the specifications is not implied. Exposure to absolute maximum rating conditions for extended periods may affect device reliability.*

## ELECTRICAL CHARACTERISTICS (DG202)

(V+ = +15V, V- = -15V, GND = 0, **$T_A$ = +25°C**, unless otherwise noted.) (For more information on TYP values see Note 3.)

| PARAMETER | SYMBOL | CONDITIONS | | DG202A | | | DG202C, D, E | | | UNITS |
|---|---|---|---|---|---|---|---|---|---|---|
| | | | | MIN | TYP | MAX | MIN | TYP | MAX | |
| **SWITCH** | | | | | | | | | | |
| Analog Signal Range | $V_{ANALOG}$ | | | -15 | | 15 | -15 | | 15 | V |
| Drain-Source ON Resistance | $R_{DS (ON)}$ | $V_D$ = ±10V, $V_{IN}$ = 2.4V, $I_S$ = 1mA | | | 115 | 175 | | 115 | 200 | Ω |
| Source OFF-Leakage Current | $I_{S (OFF)}$ | $V_{IN}$ = 0.8V | $V_S$ = 14V, $V_D$ = -14V | | 0.01 | 1.0 | | 0.01 | 5.0 | nA |
| | | | $V_S$ = -14V, $V_D$ = 14V | -1.0 | -0.02 | | -1.0 | -0.02 | | |
| Drain OFF-Leakage Current | $I_{D (OFF)}$ | $V_{IN}$ = 0.8V | $V_S$ = 14V, $V_D$ = -14V | | 0.01 | 1.0 | | 0.01 | 5.0 | |
| | | | $V_S$ = -14V, $V_D$ = 14V | -1.0 | -0.02 | | -1.0 | -0.02 | | |
| Drain ON-Leakage Current (Note 4) | $I_{D (ON)}$ | $V_{IN}$ = 2.4V | $V_S$ = -14V | | 0.1 | 1.0 | | 0.1 | 1.0 | |
| | | | $V_S$ = 14V | -1.0 | | | -5.0 | | | |

## ELECTRICAL CHARACTERISTICS (DG202) (continued)

(V+ = +15V, V- = -15V, GND = 0, **$T_A$ = +25°C**, unless otherwise noted.) (For more information on TYP values see Note 3.)

| PARAMETER | SYMBOL | CONDITIONS | DG202A | | | DG202C, D, E | | | UNITS |
|---|---|---|---|---|---|---|---|---|---|
| | | | MIN | TYP | MAX | MIN | TYP | MAX | |
| **INPUT** | | | | | | | | | |
| Input Current with Input Voltage High | $I_{INH}$ | $V_{IN}$ = 2.4V | -1.0 | -0.0004 | | -1.0 | -0.0004 | | µA |
| | | $V_{IN}$ = 15V | | 0.003 | 1.0 | | 0.003 | 1.0 | |
| Input Current with Input Voltage Low | $I_{INL}$ | $V_{IN}$ = 0 | -1.0 | -0.0004 | | -1.0 | -0.0004 | | |
| **DYNAMIC** | | | | | | | | | |
| Turn-ON Time | $t_{ON}$ | See Figure 1 Switching Time Test Circuit | | 480 | 600 | | 480 | 600 | ns |
| Turn-OFF Time | $t_{OFF1}$ | | | 370 | 450 | | 370 | 450 | |
| Charge Injection | Q | $C_L$ = 1000pF, $V_{GEN}$ = 0, $R_{GEN}$ = 0 | | 20 | | | 20 | | pC |
| Source OFF-Capacitance | $C_{S\ (OFF)}$ | $V_S$ = 0, $V_{IN}$ = 0, f = 140kHz | | 5 | | | 5 | | pF |
| Drain OFF-Capacitance | $C_{D\ (OFF)}$ | | | 5 | | | 5 | | |
| Channel ON-Capacitance | $C_{D\ (ON)}$ + $C_{S\ (ON)}$ | $V_D$ = $V_S$ = 0, $V_{IN}$ = 5V, f = 140kHz | | 16 | | | 16 | | |
| OFF-Isolation | | $V_{IN}$ = 0, $Z_L$ = 75Ω | | 70 | | | 70 | | dB |
| Crosstalk (Channel to Channel) | | $V_S$ = 2.0V, f = 100kHz | | 90 | | | 90 | | |
| **SUPPLY** | | | | | | | | | |
| Positive Supply Current | I+ | All channels ON or OFF | | 0.02 | 0.1 | | 0.02 | 0.1 | mA |
| Negative Supply Current | I- | All channels ON or OFF | -0.1 | -0.01 | | -0.1 | -0.01 | | |
| Power-Supply Range for Continuous Operation | $V_{OP}$ | | ±4.5 | | ±18 | ±4.5 | | ±18.0 | V |

**Note 3:** Typical values are for DESIGN AID ONLY, not guaranteed nor subject to production testing.
**Note 4:** $I_{D\ (ON)}$ is leakage from driver into "ON" switch.

## ELECTRICAL CHARACTERISTICS (DG202)

(V+ = +15V, V- = -15V, GND = 0, **$T_A$ = full opearting temperature range**, unless otherwise noted.) (For more information on TYP values see Note 3.)

| PARAMETER | SYMBOL | CONDITIONS | | DG202A | | | DG202C, D, E | | | UNITS |
|---|---|---|---|---|---|---|---|---|---|---|
| | | | | MIN | TYP | MAX | MIN | TYP | MAX | |
| **SWITCH** | | | | | | | | | | |
| Analog Signal Range | $V_{ANALOG}$ | | | -15 | | +15 | -15 | | +15 | V |
| Drain-Source ON Resistance (Note 5) | $R_{DS\ (ON)}$ | $V_D$ = ±10V, $V_{IN}$ = 2.4V, $I_S$ = 1mA | | | | 250 | | | 250 | Ω |
| Source OFF-Leakage Current | $I_{S\ (OFF)}$ | $V_{IN}$ = 0.8V | $V_S$ = 14V, $V_D$ = -14V | | | 100 | | | 100 | nA |
| | | | $V_S$ = -14V, $V_D$ = 14V | -100 | | | -100 | | | |
| Drain OFF-Leakage Current | $I_{D\ (OFF)}$ | $V_{IN}$ = 0.8V | $V_S$ = 14V, $V_D$ = -14V | | | 100 | | | 100 | |
| | | | $V_S$ = -14V, $V_D$ = 14V | -100 | | | -100 | | | |
| Drain ON-Leakage Current (Note 6) | $I_{D\ (ON)}$ | $V_{IN}$ = 2.4V | $V_S$ = -14V | | | 200 | | | 200 | |
| | | | $V_D$ = 14V | -200 | | | -200 | | | |
| **INPUT** | | | | | | | | | | |
| Input Current with Input Voltage High | $I_{INH}$ | $V_{IN}$ = 2.4V | | -1.0 | | | -1.0 | | | µA |
| | | $V_{IN}$ = 15V | | | | 1.0 | | | 1.0 | |
| Input Current with Input Voltage Low | $I_{INL}$ | $V_{IN}$ = 0 | | -1.0 | | | -1.0 | | | |

**Note 5:** Electrical characteristics, such as On-Resistance, will change when power supplies other than ±15V, are used.
**Note 6:** $I_{D\ (ON)}$ is leakage from driver into "ON" switch.

## Pin Description

| PIN | | NAME | FUNCTION |
|---|---|---|---|
| DIP/SO/TSSOP | QFN/TQFN | | |
| 1, 16, 9, 8 | 15, 14, 7, 6 | IN1–IN4 | Input |
| 2, 15, 10, 7 | 16, 13, 8, 5 | D1–D4 | Analog Switch Drain Terminal |
| 3, 14, 11, 6 | 1, 12, 9, 4 | S1–S4 | Analog Switch Source Terminal |
| 4 | 2 | V- | Negative-Supply Voltage Input |
| 5 | 3 | GND | Ground |
| 12 | 10 | N.C. | No Connection |
| 13 | 11 | V+ | Positive-Supply Voltage Input—Connected to Substrate |
| — | EP | EP | Exposed Pad. Connect exposed pad to V+ or leave EP unconnected. |

## Switching Time Test Circuit

Switch output waveform shown for $V_S$ = constant with logic input waveform as shown. Note that $V_S$ may be +ve or -ve as per switching times test circuit. $V_O$ is the steady state output with switch on. Feedthrough via gate capacitance may result in spikes at leading and trailing edge of output waveform.

## Protecting Against Fault Conditions

Fault conditions occur when power supplies are turned off when input signals are still present, or when over-voltages occur at the inputs during normal operation. In either case, source-to-body diodes can be forward biased and conduct current from the signal source. If

# Quad SPST CMOS Analog Switches

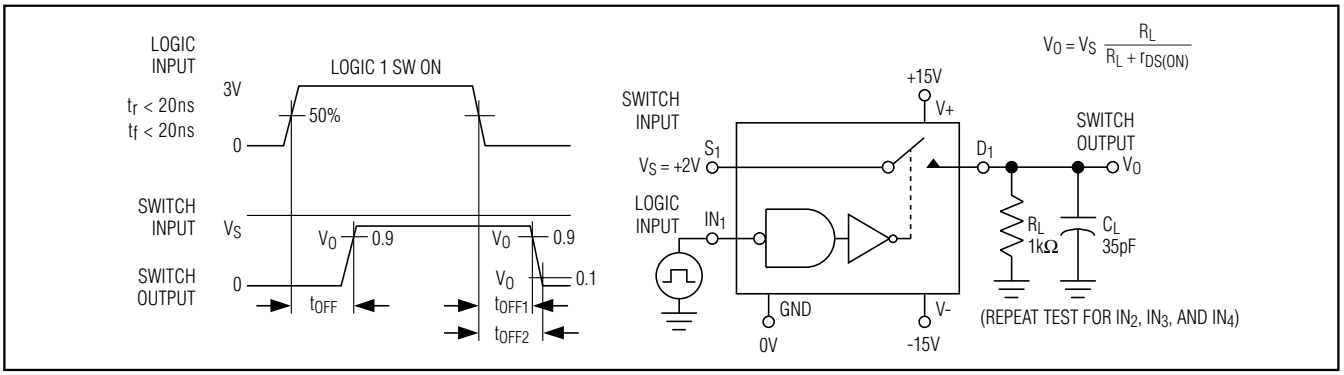


*Figure 1. Switching Time*

## Typical $R_{DS(ON)}$ vs. Power Supplies for Maxim's DG202, and DG212

| POWER SUPPLIES | $R_{DS(ON)}$ AT ANALOG SIGNAL LEVEL | | | | | |
|---|---|---|---|---|---|---|
| | -5V | +5V | -10V | +10V | -15V | +15V |
| ±5V | 350Ω | 380Ω | — | — | — | — |
| ±10V | — | — | 165Ω | 250Ω | — | — |
| ±15V | — | — | 125Ω | 160Ω | 135Ω | 155Ω |

this current is required to be kept to low (µA) levels then the addition of external protection diodes is recommended.

To provide protection for overvoltages up to 20V above the supplies, a 1N4001 or 1N914 type diode should be placed in series with the positive and negative supplies as shown in Figure 2. The addition of these diodes will reduce the analog signal range to 1V below the positive supply and 1V above the negative supply.

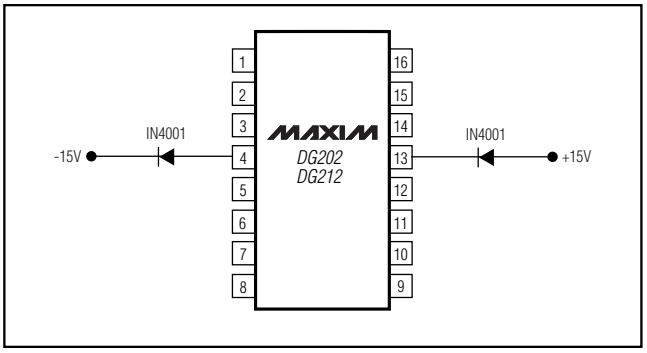


*Figure 2. Protection against Fault Conditions*

## Pin Configurations (continued)

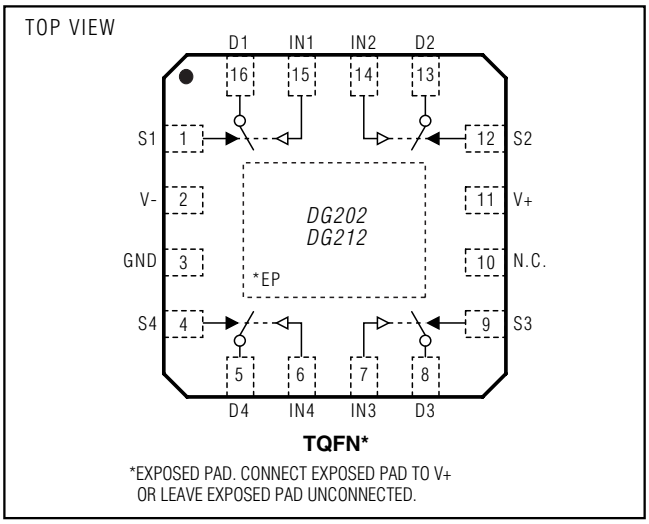


**TQFN***

*EXPOSED PAD. CONNECT EXPOSED PAD TO V+ OR LEAVE EXPOSED PAD UNCONNECTED.

## Package Information

(The package drawing(s) in this data sheet may not reflect the most current specifications. For the latest package outline information, go to **www.maxim-ic.com/packages**.)

SOICN .EPS

| | INCHES | | MILLIMETERS | |
|---|---|---|---|---|
| DIM | MIN | MAX | MIN | MAX |
| A | 0.053 | 0.069 | 1.35 | 1.75 |
| A1 | 0.004 | 0.010 | 0.10 | 0.25 |
| B | 0.014 | 0.019 | 0.35 | 0.49 |
| C | 0.007 | 0.010 | 0.19 | 0.25 |
| e | 0.050 BSC | | 1.27 BSC | |
| E | 0.150 | 0.157 | 3.80 | 4.00 |
| H | 0.228 | 0.244 | 5.80 | 6.20 |
| L | 0.016 | 0.050 | 0.40 | 1.27 |

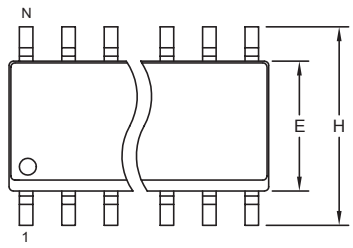


TOP VIEW

VARIATIONS:

| | INCHES | | MILLIMETERS | | | |
|---|---|---|---|---|---|---|
| DIM | MIN | MAX | MIN | MAX | N | MS012 |
| D | 0.189 | 0.197 | 4.80 | 5.00 | 8 | AA |
| D | 0.337 | 0.344 | 8.55 | 8.75 | 14 | AB |
| D | 0.386 | 0.394 | 9.80 | 10.00 | 16 | AC |

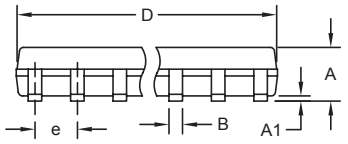


FRONT VIEW

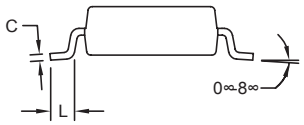


SIDE VIEW

NOTES:
1. D&E DO NOT INCLUDE MOLD FLASH.
2. MOLD FLASH OR PROTRUSIONS NOT TO EXCEED 0.15mm (.006").
3. LEADS TO BE COPLANAR WITHIN 0.10mm (.004").
4. CONTROLLING DIMENSION: MILLIMETERS.
5. MEETS JEDEC MS012.
6. N = NUMBER OF PINS.

DALLAS SEMICONDUCTOR MAXIM

PROPRIETARY INFORMATION

TITLE: PACKAGE OUTLINE, .150" SOIC

| APPROVAL | DOCUMENT CONTROL NO. | REV. | |
|---|---|---|---|
| | 21-0041 | B | 1/1 |

## Package Information (continued)

(The package drawing(s) in this data sheet may not reflect the most current specifications. For the latest package outline information, go to **www.maxim-ic.com/packages**.)

PDIPN.EPS

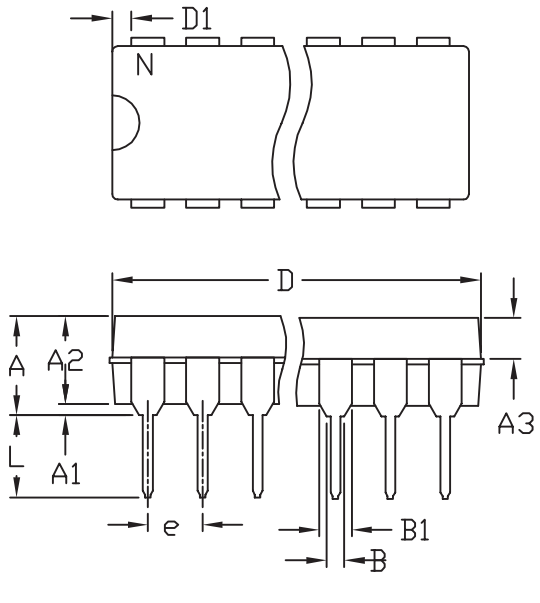


| | INCHES | | MILLIMETERS | |
|---|---|---|---|---|
| | MIN | MAX | MIN | MAX |
| A | --- | 0.180 | --- | 4.572 |
| A1 | 0.015 | --- | 0.38 | --- |
| A2 | 0.125 | 0.175 | 3.18 | 4.45 |
| A3 | 0.055 | 0.080 | 1.40 | 2.03 |
| B | 0.015 | 0.022 | 0.381 | 0.56 |
| B1 | 0.045 | 0.065 | 1.14 | 1.65 |
| C | 0.008 | 0.014 | 0.2 | 0.355 |
| D1 | 0.005 | 0.080 | 0.13 | 2.03 |
| E | 0.300 | 0.325 | 7.62 | 8.26 |
| E1 | 0.240 | 0.310 | 6.10 | 7.87 |
| e | 0.100 BSC. | | 2.54 BSC. | |
| eA | 0.300 BSC. | | 7.62 BSC. | |
| eB | 0.400 BSC. | | 10.16 BSC. | |
| L | 0.115 | 0.150 | 2.921 | 3.81 |

| | INCHES | | MILLIMETERS | | | |
|---|---|---|---|---|---|---|
| | MIN | MAX | MIN | MAX | N | MS001 |
| D | 0.348 | 0.390 | 8.84 | 9.91 | 8 | AB |
| D | 0.735 | 0.765 | 18.67 | 19.43 | 14 | AC |
| D | 0.745 | 0.765 | 18.92 | 19.43 | 16 | AA |
| D | 0.885 | 0.915 | 22.48 | 23.24 | 18 | AD |
| D | 1.015 | 1.045 | 25.78 | 26.54 | 20 | AE |
| D | 1.14 | 1.265 | 28.96 | 32.13 | 24 | AF |
| D | 1.360 | 1.380 | 34.54 | 35.05 | 28 | *5 |

NOTES:
1. D&E DO NOT INCLUDE MOLD FLASH
2. MOLD FLASH OR PROTRUSIONS NOT TO EXCEED .15mm (.006")
3. CONTROLLING DIMENSION: MILLIMETER
4. MEETS JEDEC MS001-XX AS SHOWN IN ABOVE TABLE
5. SIMILIAR TO JEDEC MO-058AB
6. N = NUMBER OF PINS

MAXIM 120 SAN GABRIEL DR SUNNYVALE CA 94086 FAX (408) 737 7194
PROPRIETARY INFORMATION

PACKAGE FAMILY OUTLINE: PDIP .300" — TITLE

1/1

21-0043 D — DOCUMENT CONTROL NUMBER — REV

## Package Information (continued)

(The package drawing(s) in this data sheet may not reflect the most current specifications. For the latest package outline information, go to **www.maxim-ic.com/packages**.)

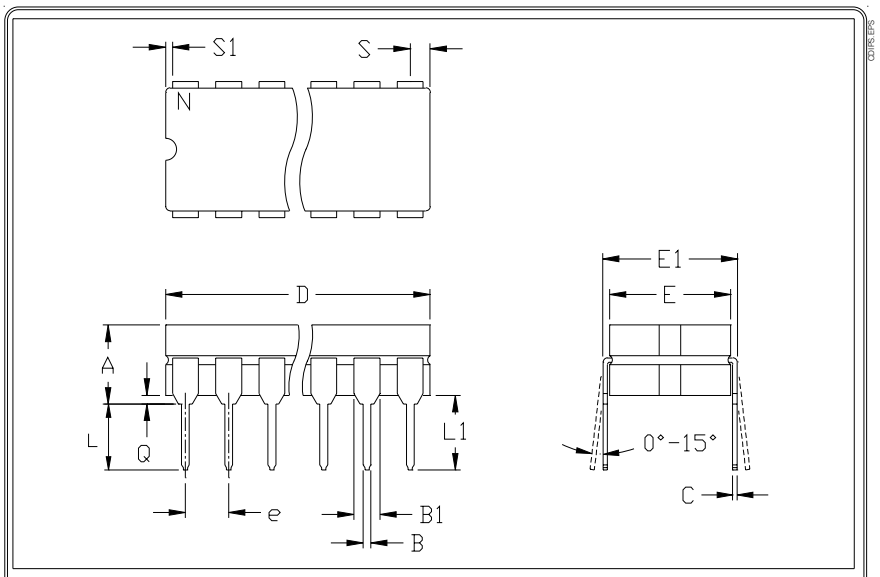


| | INCHES | | MILLIMETERS | |
|---|---|---|---|---|
| | MIN | MAX | MIN | MAX |
| A | --- | 0.200 | --- | 5.08 |
| B | 0.014 | 0.023 | 0.36 | 0.58 |
| B1 | 0.038 | 0.065 | 0.97 | 1.65 |
| C | 0.008 | 0.015 | 0.20 | 0.38 |
| E | 0.220 | 0.310 | 5.59 | 7.87 |
| E1 | 0.290 | 0.320 | 7.37 | 8.13 |
| e | 0.100 | | 2.54 | |
| L | 0.125 | 0.200 | 3.18 | 5.08 |
| L1 | 0.150 | --- | 0.00 | --- |
| Q | 0.015 | 0.070 | 0.38 | 1.78 |
| S | --- | 0.098 | --- | 2.49 |
| S1 | 0.005 | --- | 0.13 | --- |

| | INCHES | | MILLIMETERS | | | |
|---|---|---|---|---|---|---|
| | MIN | MAX | MIN | MAX | N | CASE |
| D | --- | 0.405 | --- | 10.29 | 8 | P:D4 |
| D | --- | 0.785 | --- | 19.94 | 14 | C:D1 |
| D | --- | 0.840 | --- | 21.34 | 16 | E:D2 |
| D | --- | 0.960 | --- | 24.38 | 18 | V:D6 |
| D | --- | 1.060 | --- | 26.92 | 20 | R:D8 |
| D | --- | 1.280 | --- | 32.51 | 24 | L:D9 |

NOTES:
1. CONTROLLING DIMENSION: INCH
2. MEETS 1835 CASE OUTLINE CONFIGURATION #1 AS SHOWN IN ABOVE TABLE
3. N = NUMBER OF PINS

MAXIM 120 SAN GABRIEL DR SUNNYVALE CA 94086 FAX (408) 737 7194 PROPRIETARY INFORMATION

PACKAGE FAMILY OUTLINE: CDIP .300" (TITLE) | 1/1 | 21-0045 A (DOCUMENT CONTROL NUMBER REV)

# Quad SPST CMOS Analog Switches

## Package Information (continued)

(The package drawing(s) in this data sheet may not reflect the most current specifications. For the latest package outline information, go to **www.maxim-ic.com/packages**.)

TSSOP4.40mm.EPS

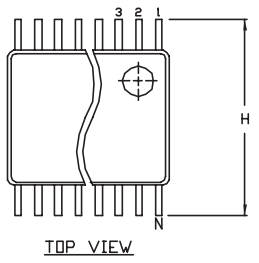


TOP VIEW

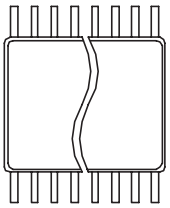

BOTTOM VIEW

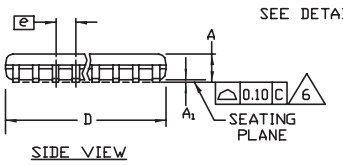


SIDE VIEW

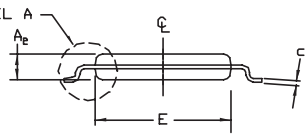


END VIEW

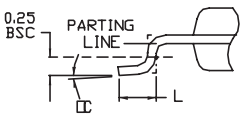


DETAIL A

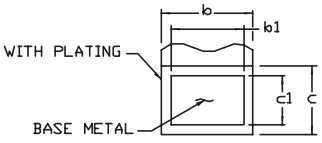


LEAD TIP DETAIL

| SYMBOL | COMMON DIMENSIONS | | | |
|---|---|---|---|---|
| | MILLIMETERS | | INCHES | |
| | MIN. | MAX. | MIN. | MAX. |
| A | ——— | 1.10 | | .043 |
| $A_1$ | 0.05 | 0.15 | .002 | .006 |
| $A_2$ | 0.85 | 0.95 | .033 | .037 |
| b | 0.19 | 0.30 | .007 | .012 |
| $b_1$ | 0.19 | 0.25 | .007 | .010 |
| c | 0.09 | 0.20 | .004 | .008 |
| $c_1$ | 0.09 | 0.14 | .004 | .006 |
| D | SEE VARIATIONS | | SEE VARIATIONS | |
| E | 4.30 | 4.50 | .169 | .177 |
| e | 0.65 BSC | | .026 BSC | |
| H | 6.25 | 6.55 | .246 | .258 |
| L | 0.50 | 0.70 | .020 | .028 |
| N | SEE VARIATIONS | | SEE VARIATIONS | |
| α | 0° | 8° | 0° | 8° |

| JEDEC | | | VARIATIONS | | | |
|---|---|---|---|---|---|---|
| MO-153 | N | | MILLIMETERS | | INCHES | |
| | | | MIN. | MAX. | MIN. | MAX. |
| AB-1 | 14 | D | 4.90 | 5.10 | .193 | .201 |
| AB | 16 | D | 4.90 | 5.10 | .193 | .201 |
| AC | 20 | D | 6.40 | 6.60 | .252 | .260 |
| AD | 24 | D | 7.70 | 7.90 | .303 | .311 |
| AE | 28 | D | 9.60 | 9.80 | .378 | .386 |

NOTES:
1. DIMENSIONS D AND E DO NOT INCLUDE FLASH
2. MOLD FLASH OR PROTRUSIONS NOT TO EXCEED 0.15mm PER SIDE
3. CONTROLLING DIMENSION: MILLIMETER
4. MEETS JEDEC OUTLINE MO-153. SEE JEDEC VARIATIONS TABLE
5. "N" REFERS TO NUMBER OF LEADS
6. THE LEAD TIPS MUST LIE WITHIN A SPECIFIED ZONE. THIS TOLERANCE ZONE IS DEFINED BY TWO PARALLEL PLANES. ONE PLANE IS THE SEATING PLANE, DATUM [-C-]; THE OTHER PLANE IS AT THE SPECIFIED DISTANCE FROM [-C-] IN THE DIRECTION INDICATED

-DRAWING NOT TO SCALE-

DALLAS SEMICONDUCTOR MAXIM

TITLE: PACKAGE OUTLINE, TSSOP 4.40mm BODY

| APPROVAL | DOCUMENT CONTROL NO. | REV. | |
|---|---|---|---|
| | 21-0066 | G | 1/1 |

## Package Information (continued)

(The package drawing(s) in this data sheet may not reflect the most current specifications. For the latest package outline information, go to **www.maxim-ic.com/packages**.)

32L QFN.EPS

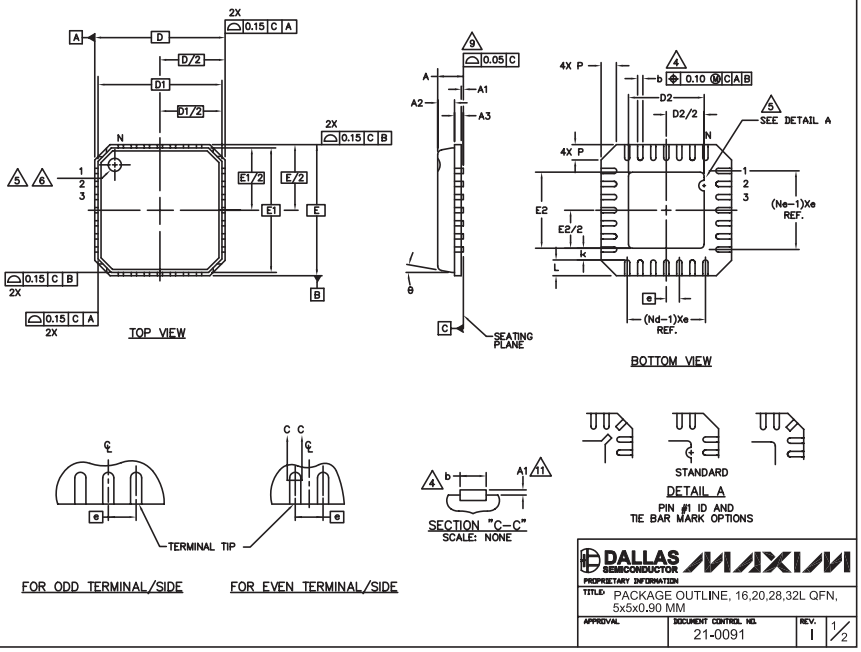


| COMMON DIMENSIONS | | | | | | | | | | | | |
|---|---|---|---|---|---|---|---|---|---|---|---|---|
| PKG | 16L 5x5 | | | 20L 5x5 | | | 28L 5x5 | | | 32L 5x5 | | |
| SYMBOL | MIN. | NOM. | MAX. | MIN. | NOM. | MAX. | MIN. | NOM. | MAX. | MIN. | NOM. | MAX. |
| A | 0.80 | 0.90 | 1.00 | 0.80 | 0.90 | 1.00 | 0.80 | 0.90 | 1.00 | 0.80 | 0.90 | 1.00 |
| A1 | 0.00 | 0.01 | 0.05 | 0.00 | 0.01 | 0.05 | 0.00 | 0.01 | 0.05 | 0.00 | 0.01 | 0.05 |
| A2 | 0.00 | 0.65 | 1.00 | 0.00 | 0.65 | 1.00 | 0.00 | 0.65 | 1.00 | 0.00 | 0.65 | 1.00 |
| A3 | 0.20 REF | | | 0.20 REF | | | 0.20 REF | | | 0.20 REF | | |
| b | 0.28 | 0.33 | 0.40 | 0.23 | 0.28 | 0.35 | 0.18 | 0.23 | 0.30 | 0.18 | 0.23 | 0.30 |
| D | 4.90 | 5.00 | 5.10 | 4.90 | 5.00 | 5.10 | 4.90 | 5.00 | 5.10 | 4.90 | 5.00 | 5.10 |
| D1 | 4.75 BSC | | | 4.75 BSC | | | 4.75 BSC | | | 4.75 BSC | | |
| E | 4.90 | 5.00 | 5.10 | 4.90 | 5.00 | 5.10 | 4.90 | 5.00 | 5.10 | 4.90 | 5.00 | 5.10 |
| E1 | 4.75 BSC | | | 4.75 BSC | | | 4.75 BSC | | | 4.75 BSC | | |
| e | 0.80 BSC | | | 0.65 BSC | | | 0.50 BSC | | | 0.50 BSC | | |
| k | 0.25 | – | – | 0.25 | – | – | 0.25 | – | – | 0.25 | – | – |
| L | 0.35 | 0.55 | 0.75 | 0.35 | 0.55 | 0.75 | 0.35 | 0.55 | 0.75 | 0.30 | 0.40 | 0.50 |
| N | 16 | | | 20 | | | 28 | | | 32 | | |
| ND | 4 | | | 5 | | | 7 | | | 8 | | |
| NE | 4 | | | 5 | | | 7 | | | 8 | | |
| P | 0.00 | 0.42 | 0.60 | 0.00 | 0.42 | 0.60 | 0.00 | 0.42 | 0.60 | 0.00 | 0.42 | 0.60 |
| θ | 0° | | 12° | 0° | | 12° | 0° | | 12° | 0° | | 12° |

| EXPOSED PAD VARIATIONS | | | | | | |
|---|---|---|---|---|---|---|
| PKG. CODES | D2 | | | E2 | | |
| | MIN. | NOM. | MAX. | MIN. | NOM. | MAX. |
| G1655-3 | 2.95 | 3.10 | 3.25 | 2.95 | 3.10 | 3.25 |
| G2055-1 | 2.55 | 2.70 | 2.85 | 2.55 | 2.70 | 2.85 |
| G2055-2 | 2.95 | 3.10 | 3.25 | 2.95 | 3.10 | 3.25 |
| G2855-1 | 2.55 | 2.70 | 2.85 | 2.55 | 2.70 | 2.85 |
| G2855-2 | 2.95 | 3.10 | 3.25 | 2.95 | 3.10 | 3.25 |
| G3255-1 | 2.95 | 3.10 | 3.25 | 2.95 | 3.10 | 3.25 |

NOTES:

1. DIE THICKNESS ALLOWABLE IS 0.305mm MAXIMUM (.012 INCHES MAXIMUM)
2. DIMENSIONING & TOLERANCES CONFORM TO ASME Y14.5M. – 1994.
3. N IS THE NUMBER OF TERMINALS.
   Nd IS THE NUMBER OF TERMINALS IN X–DIRECTION & Ne IS THE NUMBER OF TERMINALS IN Y–DIRECTION.
4. DIMENSION b APPLIES TO PLATED TERMINAL AND IS MEASURED BETWEEN 0.20 AND 0.25mm FROM TERMINAL TIP.
5. THE PIN #1 IDENTIFIER MUST BE EXISTED ON THE TOP SURFACE OF THE PACKAGE BY USING INDENTATION MARK OR INK/LASER MARKED. DETAILS OF PIN #1 IDENTIFIER IS OPTIONAL, BUT MUST BE LOCATED WITHIN ZONE INDICATED.
6. EXACT SHAPE AND SIZE OF THIS FEATURE IS OPTIONAL.
7. ALL DIMENSIONS ARE IN MILLIMETERS.
8. PACKAGE WARPAGE MAX 0.05mm.
9. APPLIED FOR EXPOSED PAD AND TERMINALS. EXCLUDE EMBEDDED PART OF EXPOSED PAD FROM MEASURING.
10. MEETS JEDEC MO220; EXCEPT DIMENSION "b".
11. APPLIED FOR EXPOSED PAD AND TERMINALS. EXCLUDE EMBEDDING PART OF EXPOSED PAD FROM MEASURING.
12. THIS PACKAGE OUTLINE APPLIES TO ANVIL SINGULATION (STEPPED SIDES).

DALLAS SEMICONDUCTOR MAXIM
PROPRIETARY INFORMATION
TITLE: PACKAGE OUTLINE, 16,20,28,32L QFN, 5x5x0.90 MM
APPROVAL
DOCUMENT CONTROL NO. 21-0091
REV. I
2/2

# Quad SPST CMOS Analog Switches

## Package Information (continued)

(The package drawing(s) in this data sheet may not reflect the most current specifications. For the latest package outline information, go to **www.maxim-ic.com/packages**.)

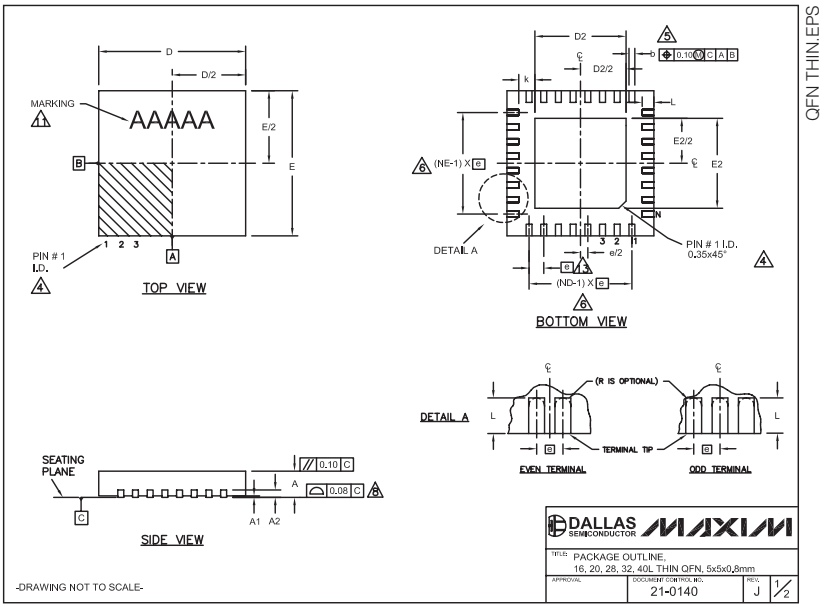


| COMMON DIMENSIONS | | | | | | | | | | | | | | | |
|---|---|---|---|---|---|---|---|---|---|---|---|---|---|---|---|
| PKG. | 16L 5x5 | | | 20L 5x5 | | | 28L 5x5 | | | 32L 5x5 | | | 40L 5x5 | | |
| SYMBOL | MIN. | NOM. | MAX. | MIN. | NOM. | MAX. | MIN. | NOM. | MAX. | MIN. | NOM. | MAX. | MIN. | NOM. | MAX. |
| A | 0.70 | 0.75 | 0.80 | 0.70 | 0.75 | 0.80 | 0.70 | 0.75 | 0.80 | 0.70 | 0.75 | 0.80 | 0.70 | 0.75 | 0.80 |
| A1 | 0 | 0.02 | 0.05 | 0 | 0.02 | 0.05 | 0 | 0.02 | 0.05 | 0 | 0.02 | 0.05 | 0 | 0.02 | 0.05 |
| A2 | 0.20 REF. | | | 0.20 REF. | | | 0.20 REF. | | | 0.20 REF. | | | 0.20 REF. | | |
| b | 0.25 | 0.30 | 0.35 | 0.25 | 0.30 | 0.35 | 0.20 | 0.25 | 0.30 | 0.20 | 0.25 | 0.30 | 0.15 | 0.20 | 0.25 |
| D | 4.90 | 5.00 | 5.10 | 4.90 | 5.00 | 5.10 | 4.90 | 5.00 | 5.10 | 4.90 | 5.00 | 5.10 | 4.90 | 5.00 | 5.10 |
| E | 4.90 | 5.00 | 5.10 | 4.90 | 5.00 | 5.10 | 4.90 | 5.00 | 5.10 | 4.90 | 5.00 | 5.10 | 4.90 | 5.00 | 5.10 |
| e | 0.80 BSC. | | | 0.65 BSC. | | | 0.50 BSC. | | | 0.50 BSC. | | | 0.40 BSC. | | |
| k | 0.25 | - | - | 0.25 | - | - | 0.25 | - | - | 0.25 | - | - | 0.25 | - | - |
| L | 0.30 | 0.40 | 0.50 | 0.45 | 0.55 | 0.65 | 0.45 | 0.55 | 0.65 | 0.30 | 0.40 | 0.50 | 0.30 | 0.40 | 0.50 |
| N | 16 | | | 20 | | | 28 | | | 32 | | | 40 | | |
| ND | 4 | | | 5 | | | 7 | | | 8 | | | 10 | | |
| NE | 4 | | | 5 | | | 7 | | | 8 | | | 10 | | |
| JEDEC | WHHB | | | WHHC | | | WHHD-1 | | | WHHD-2 | | | --- | | |

| EXPOSED PAD VARIATIONS | | | | | | |
|---|---|---|---|---|---|---|
| PKG. CODES | D2 | | | E2 | | |
| | MIN. | NOM. | MAX. | MIN. | NOM. | MAX. |
| T1655-2 | 3.00 | 3.10 | 3.20 | 3.00 | 3.10 | 3.20 |
| T1655-3 | 3.00 | 3.10 | 3.20 | 3.00 | 3.10 | 3.20 |
| T1655N-1 | 3.00 | 3.10 | 3.20 | 3.00 | 3.10 | 3.20 |
| T2055-3 | 3.00 | 3.10 | 3.20 | 3.00 | 3.10 | 3.20 |
| T2055-4 | 3.00 | 3.10 | 3.20 | 3.00 | 3.10 | 3.20 |
| T2055-5 | 3.15 | 3.25 | 3.35 | 3.15 | 3.25 | 3.35 |
| T2855-3 | 3.15 | 3.25 | 3.35 | 3.15 | 3.25 | 3.35 |
| T2855-4 | 2.60 | 2.70 | 2.80 | 2.60 | 2.70 | 2.80 |
| T2855-5 | 2.60 | 2.70 | 2.80 | 2.60 | 2.70 | 2.80 |
| T2855-6 | 3.15 | 3.25 | 3.35 | 3.15 | 3.25 | 3.35 |
| T2855-7 | 2.60 | 2.70 | 2.80 | 2.60 | 2.70 | 2.80 |
| T2855-8 | 3.15 | 3.25 | 3.35 | 3.15 | 3.25 | 3.35 |
| T2855N-1 | 3.15 | 3.25 | 3.35 | 3.15 | 3.25 | 3.35 |
| T3255-3 | 3.00 | 3.10 | 3.20 | 3.00 | 3.10 | 3.20 |
| T3255-4 | 3.00 | 3.10 | 3.20 | 3.00 | 3.10 | 3.20 |
| T3255-5 | 3.00 | 3.10 | 3.20 | 3.00 | 3.10 | 3.20 |
| T3255N-1 | 3.00 | 3.10 | 3.20 | 3.00 | 3.10 | 3.20 |
| T4055-1 | 3.40 | 3.50 | 3.60 | 3.40 | 3.50 | 3.60 |
| T4055-2 | 3.40 | 3.50 | 3.60 | 3.40 | 3.50 | 3.60 |

** SEE COMMON DIMENSIONS TABLE

NOTES:
1. DIMENSIONING & TOLERANCING CONFORM TO ASME Y14.5M-1994.
2. ALL DIMENSIONS ARE IN MILLIMETERS. ANGLES ARE IN DEGREES.
3. N IS THE TOTAL NUMBER OF TERMINALS.
4. THE TERMINAL #1 IDENTIFIER AND TERMINAL NUMBERING CONVENTION SHALL CONFORM TO JESD 95-1 SPP-012. DETAILS OF TERMINAL #1 IDENTIFIER ARE OPTIONAL, BUT MUST BE LOCATED WITHIN THE ZONE INDICATED. THE TERMINAL #1 IDENTIFIER MAY BE EITHER A MOLD OR MARKED FEATURE.
5. DIMENSION b APPLIES TO METALLIZED TERMINAL AND IS MEASURED BETWEEN 0.25 mm AND 0.30 mm FROM TERMINAL TIP.
6. ND AND NE REFER TO THE NUMBER OF TERMINALS ON EACH D AND E SIDE RESPECTIVELY.
7. DEPOPULATION IS POSSIBLE IN A SYMMETRICAL FASHION.
8. COPLANARITY APPLIES TO THE EXPOSED HEAT SINK SLUG AS WELL AS THE TERMINALS.
9. DRAWING CONFORMS TO JEDEC MO220, EXCEPT EXPOSED PAD DIMENSION FOR T2855-3 AND T2855-6.
10. WARPAGE SHALL NOT EXCEED 0.10 mm.
11. MARKING IS FOR PACKAGE ORIENTATION REFERENCE ONLY.
12. NUMBER OF LEADS SHOWN ARE FOR REFERENCE ONLY.
13. LEAD CENTERLINES TO BE AT TRUE POSITION AS DEFINED BY BASIC DIMENSION "e", ±0.05.

-DRAWING NOT TO SCALE-

DALLAS SEMICONDUCTOR MAXIM
PACKAGE OUTLINE, 16, 20, 28, 32, 40L THIN QFN, 5x5x0.8mm
21-0140
J
2/2

## Revision History

Pages changed at Rev3: 1–6, 11

*Maxim cannot assume responsibility for use of any circuitry other than circuitry entirely embodied in a Maxim product. No circuit patent licenses are implied. Maxim reserves the right to change the circuitry and specifications without notice at any time.*



© 2006 Maxim Integrated Products MAXIM is a registered trademark of Maxim Integrated Products, Inc.

## Looking for pricing, stock, or lifecycle information?

Click below to explore more details on WIN SOURCE:

- View DG202CJ on WIN SOURCE
- Maxim Integrated Information

## Optimize Your Supply Chain with WIN SOURCE Solutions

- Global Sourcing Solution
- Obsolete Management
- Cost Control Management
- Shortage Management
- Alternative Solution
- Excess Inventory Management