THE DATASHEET OF

MAX16005DTE+

www.win-source.net 0086-755-83957316

MAX16000–MAX16007

Low-Voltage, Quad/Hex/Octal-Voltage µP Supervisors

General Description

The MAX16000–MAX16007 are low-voltage, quad/hex/octal-voltage µP supervisors in small TQFN and TSSOP packages. These devices provide supervisory functions for complex multivoltage systems. The MAX16000/MAX16001/MAX16002 monitor four voltages, the MAX16003/MAX16004/MAX16005 monitor six voltages, and the MAX16006/MAX16007 monitor eight voltages.

The MAX16000/MAX16001/MAX16003/MAX16004/MAX16006 offer independent outputs for each monitored voltage. The MAX16001/MAX16002/MAX16004–MAX16007 offer a reset output that asserts whenever any of the monitored voltages fall below their respective thresholds or the manual reset input is asserted. The reset output remains asserted for the reset timeout after all voltages are above their respective thresholds and the manual reset input is deasserted. The minimum reset timeout is internally set to 140ms or can be adjusted with an external capacitor.

All open-drain outputs have internal 30µA pullups that eliminate the need for external pullup resistors. However, each output can be driven with an external voltage up to 5.5V. Other features offered include a manual reset input, a tolerance pin for selecting 5% or 10% input thresholds, and a margin enable function for deasserting the outputs during margin testing.

The MAX16001/MAX16002/MAX16004–MAX16007 offer a watchdog timer that asserts $\overline{RESET}$ or an independent watchdog output (MAX16005) when the watchdog timeout period (1.6s typ) is exceeded. The watchdog timer can be disabled by leaving the input open.

These devices are offered in 12, 16, 20, and 24-pin TQFN and 16-pin TSSOP packages. These are fully specified from -40°C to +125°C.

Applications

- Storage Equipment
- Servers
- Networking/Telecommunication Equipment
- Multivoltage ASICs

Benefits and Features

- Fixed Thresholds for 5V, 3.3V, 3V, 2.5V, 1.8V, 1.5V, 1.2V, and 0.9V Systems
- Adjustable Thresholds Monitor Voltages Down to 0.4V
- Open-Drain Outputs with Internal Pullups Reduce the Number of External Components
- Fixed 140ms (min) or Capacitor-Adjustable Reset Timeout
- Manual Reset, Margin Enable, and Tolerance Select Inputs
- Watchdog Timer
  - 1.6s (typ) Timeout Period
  - 54s Startup Delay After Reset (Except MAX16005)
- Independent Watchdog Output (MAX16005)
- RESET Output Indicates All Voltages Present
- Independent Voltage Monitors
- Guaranteed Correct Logic State Down to V_{CC} = 1V
- Small (4mm x 4mm) TQFN Package
- TSSOP (5mm x 4.4mm) Package (MAX16005)
- AEC-Q100 Qualified (MAX16001ATE/V+ and MAX16001DTE/V+ Only)

Typical Operating Circuit

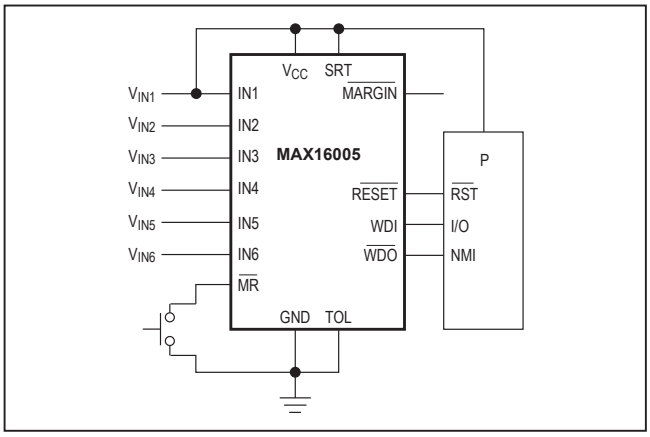

***Selector Guide* and *Ordering Information* appear at end of data sheet.**

maxim integrated™

Absolute Maximum Ratings

V_{CC}, OUT_, IN_, $\overline{RESET}$, $\overline{WDO}$ to GND .....-0.3V to +6V
TOL, $\overline{MARGIN}$, $\overline{MR}$, SRT, WDI, to GND ..... -0.3V to VCC + 0.3
Input/Output Current ($\overline{RESET}$, $\overline{MARGIN}$,
SRT, $\overline{MR}$, TOL, OUT_, $\overline{WDO}$, WDI) .....±20mA
Continuous Power Dissipation (TA = +70°C)
12-Pin TQFN (derate 16.9mW/°C above +70°C).....1349mW
16-Pin TQFN (derate 16.9mW/°C above +70°C).....1349mW
20-Pin TQFN (derate 16.9mW/°C above +70°C).....1355mW
24-Pin TQFN (derate 16.9mW/°C above +70°C).....1666mW
16-Pin TSSOP (derate 9.4mW/°C above +70°C).....754mW
Operating Temperature Range..... -40°C to +125°C
Junction Temperature.....+150°C
Storage Temperature Range..... -65°C to +150°C
Lead Temperature (soldering, 10s) .....+300°C
Soldering Temperature (reflow).....+260°C

Stresses beyond those listed under "Absolute Maximum Ratings" may cause permanent damage to the device. These are stress ratings only, and functional operation of the device at these or any other conditions beyond those indicated in the operational sections of the specifications is not implied. Exposure to absolute maximum rating conditions for extended periods may affect device reliability.

Package Information

PACKAGE TYPE: 12 TQFN	
Package Code	T1244+4
Outline Number	**21-0139**
Land Pattern Number	**90-0068**
PACKAGE TYPE: 16 TSSOP	
Package Code	U16+2
Outline Number	**21-0066**
Land Pattern Number	**90-0117**
PACKAGE TYPE: 16 TQFN	
Package Code	T1644+4
Outline Number	**21-0139**
Land Pattern Number	**90-0070**
PACKAGE TYPE: 20 TQF_N	
Package Code	T2044+3
Outline Number	**21-0139**
Land Pattern Number	**90-0037**
PACKAGE TYPE: 24 TQF_N	
Package Code	T2444+4
Outline Number	**21-0139**
Land Pattern Number	**90-0022**

For the latest package outline information and land patterns (footprints), go to **www.maximintegrated.com/packages**. Note that a "+", "#", or "-" in the package code indicates RoHS status only. Package drawings may show a different suffix character, but the drawing pertains to the package regardless of RoHS status.

Electrical Characteristics

(V_{CC} = 2.0V to 5.5V, T_A = -40°C to +125°C, unless otherwise specified. Typical values are at V_{CC} = 3.3V, T_A = +25°C.) (Note 1)

PARAMETER	SYMBOL	CONDITIONS	MIN	TYP	MAX	UNITS
Operating Voltage Range	V_{CC}	(Note 2)	1.0		5.5	V
Supply Current	I_{CC}	V_{CC} = 3.3V, OUT_, $\overline{RESET}$ not asserted (Note 3)		45	65	µA
		V_{CC} = 5V, OUT_, $\overline{RESET}$ not asserted		50	70	
UVLO (Undervoltage Lockout)	V_{UVLO}	V_{CC} rising	1.62	1.8	1.98	V
IN_ (See Table 1)						
Threshold Voltages (IN_ Falling)	V_{TH}	5V threshold, TOL = GND	4.50	4.625	4.75	V
		5V threshold, TOL = V_{CC}	4.25	4.375	4.50	
		3.3V threshold, TOL = GND	2.970	3.053	3.135	
		3.3V threshold, TOL = V_{CC}	2.805	2.888	2.970	
		3.0V threshold, TOL = GND	2.70	2.775	2.85	
		3.0V threshold, TOL = V_{CC}	2.55	2.625	2.70	
		2.5V threshold, TOL = GND	2.250	2.313	2.375	
		2.5V threshold, TOL = V_{CC}	2.125	2.188	2.250	
		1.8V threshold, TOL = GND	1.62	1.665	1.71	
		1.8V threshold, TOL = V_{CC}	1.53	1.575	1.62	
		1.5V threshold, TOL = GND	1.350	1.388	1.425	
		1.5V threshold, TOL = V_{CC}	1.275	1.313	1.350	
		1.2V threshold, TOL = GND	1.08	1.11	1.14	
		1.2V threshold, TOL = V_{CC}	1.02	1.05	1.08	
		0.9V threshold, TOL = GND	0.810	0.833	0.855	
		0.9V threshold, TOL = V_{CC}	0.765	0.788	0.810	
Adjustable Threshold (IN_ Falling)	V_{TH}	TOL = GND	0.388	0.394	0.400	V
		TOL = V_{CC}	0.366	0.372	0.378	
IN_ Hysteresis	V_{TH_HYS}	IN_ rising		0.5		% V_{TH}
IN_ Input Current		Fixed thresholds		3	16	µA
		Adjustable thresholds	-100		+100	nA

Electrical Characteristics (continued)

(V_{CC} = 2.0V to 5.5V, T_A = -40°C to +125°C, unless otherwise specified. Typical values are at V_{CC} = 3.3V, T_A = +25°C.) (Note 1)

PARAMETER	SYMBOL	CONDITIONS	MIN	TYP	MAX	UNITS
$\overline{RESET}$						
Reset Timeout	t_{RP}	SRT = V_{CC}	140	200	280	ms
		C_{SRT} = 1500pF (Note 4)	2.43	3.09	3.92	
		C_{SRT} = 100pF		0.206		
		C_{SRT} = open		50		µs
SRT Ramp Current	I_{SRT}	V_{SRT} = 0V	460	600	740	nA
SRT Threshold			1.173	1.235	1.293	V
SRT Hysteresis				100		mV
IN_ to Reset Delay	t_{RD}	IN_ falling		20		µs
$\overline{RESET}$ Output-Voltage Low	V_{OL}	V_{CC} = 3.3V, I_{SINK} = 10mA, $\overline{RESET}$ asserted			0.30	V
		V_{CC} = 2.5V, I_{SINK} = 6mA, $\overline{RESET}$ asserted			0.30	
		V_{CC} = 1.2V, I_{SINK} = 50µA, $\overline{RESET}$ asserted			0.30	
$\overline{RESET}$ Output-Voltage High	V_{OH}	V_{CC} ≥ 2.0V, ISOURCE = 6µA, $\overline{RESET}$ deasserted	0.8 x V_{CC}			V
$\overline{MR}$ Input-Voltage Low	V_{IL}				0.3 x V_{CC}	V
$\overline{MR}$ Input-Voltage High	V_{IH}		0.7 x V_{CC}			V
$\overline{MR}$ Minimum Pulse Width			1			µs
$\overline{MR}$ Glitch Rejection				100		ns
$\overline{MR}$ to Reset Delay				200		ns
$\overline{MR}$ Pullup Resistance		Pulled up to V_{CC}	12	20	28	kΩ
OUTPUTS (OUT_)						
OUT_ Output-Voltage Low	V_{OL}	V_{CC} = 3.3V, I_{SINK} = 2mA			0.30	V
		V_{CC} = 2.5V, I_{SINK} = 1.2mA			0.30	
OUT_ Output-Voltage High	V_{OH}	V_{CC} R 2.0V, I_{SOURCE} = 6µA	0.8 x V_{CC}			V
IN_ to OUT_ Propagation Delay	t_D	(V_{TH} + 100mV) to (V_{TH} - 100mV)		20		µs
REFERENCE OUTPUT (MAX16005 Only)						
Reference Short-Circuit Current		Shorted to GND		0.8		mA
Reference Output Accuracy	V_{REF}	No load	1.200	1.235	1.270	V
Line Regulation				0.005		% / V
Reference Load Regulation		Sourcing, 0 ≤ I_{REF} ≤ 40µA		10		Ω

Electrical Characteristics (continued)

(V_{CC} = 2.0V to 5.5V, T_A = -40°C to +125°C, unless otherwise specified. Typical values are at V_{CC} = 3.3V, T_A = +25°C.) (Note 1)

PARAMETER	SYMBOL	CONDITIONS	MIN	TYP	MAX	UNITS
WATCHDOG TIMER (MAX16001/MAX16002/MAX16004–MAX16007)						
WDI Input-Voltage Low	V_{IL}				0.3 x V_{CC}	V
WDI Input-Voltage High	V_{IH}		0.7 x V_{CC}			V
WDI Pulse Width		(Note 5)	50			ns
Watchdog Timeout Period	t_{WDI}		1.12	1.6	2.40	s
Watchdog Startup Period		MAX16001/2/4/6/7	35	54	72	s
Watchdog Input Current		V_{WDI} = 0 to V_{CC} (Note 5)	-1		+1	µA
$\overline{WDO}$ Output-Voltage Low (MAX16005 Only)	V_{OL}	V_{CC} = 3.3V, I_{SINK} = 2mA			0.30	V
		V_{CC} = 2.5V, I_{SINK} = 1.2mA			0.30	
$\overline{WDO}$ Output-Voltage High (MAX16005 Only)	V_{OH}	V_{CC} ≥ 2.0V, I_{SOURCE} = 6µA, $\overline{WDO}$ deasserted	0.8 x V_{CC}			V
DIGITAL LOGIC						
TOL Input-Voltage Low	V_{IL}				0.3 x V_{CC}	V
TOL Input-Voltage High	V_{IH}		0.7 x V_{CC}			V
TOL Input Current		TOL = V_{CC}			100	nA
$\overline{MARGIN}$ Input-Voltage Low	V_{IL}				0.3 x V_{CC}	V
$\overline{MARGIN}$ Input-Voltage High	V_{IH}		0.7 x V_{CC}			V
$\overline{MARGIN}$ Pullup Resistance		Pulled up to V_{CC}	12	20	28	kΩ
$\overline{MARGIN}$ Delay Time	t_{MD}	Rising or falling (Note 6)		50		µs

Note 1: Devices are tested at T_A = +25°C and guaranteed by design for T_A = T_{MIN} to T_{MAX}.
Note 2: The outputs are guaranteed to be in the correct logic state down to V_{CC} = 1V.
Note 3: Measured with WDI, $\overline{MARGIN}$, and $\overline{MR}$ unconnected.
Note 4: The minimum and maximum specifications for this parameter are guaranteed by using the worst case of the SRT ramp current and SRT threshold specifications.
Note 5: Guaranteed by design and not production tested.
Note 6: Amount of time required for logic to lock/unlock outputs from margin testing.

Typical Operating Characteristics

(V_{CC} = 3.3V, T_A = +25°C, unless otherwise noted.)

SUPPLY CURRENT vs. SUPPLY VOLTAGE

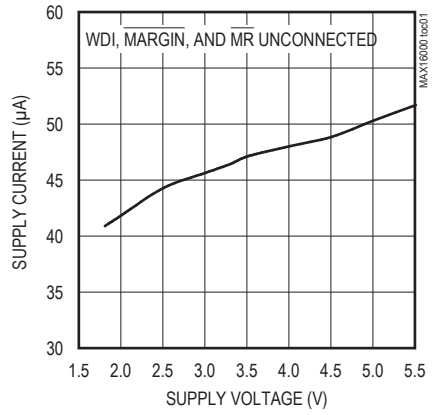

SUPPLY CURRENT vs. TEMPERATURE

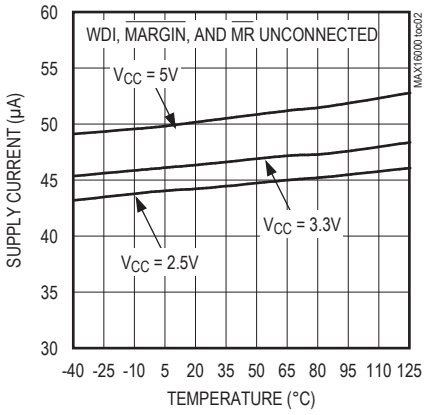

NORMALIZED THRESHOLD vs. SUPPLY VOLTAGE

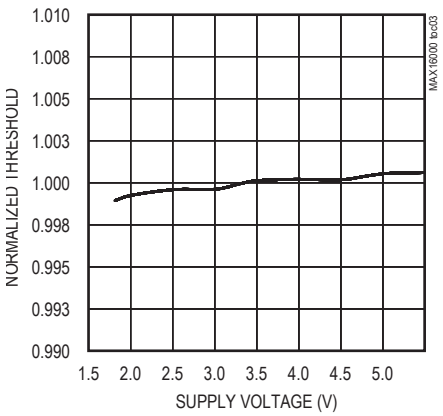

NORMALIZED THRESHOLD vs. TEMPERATURE

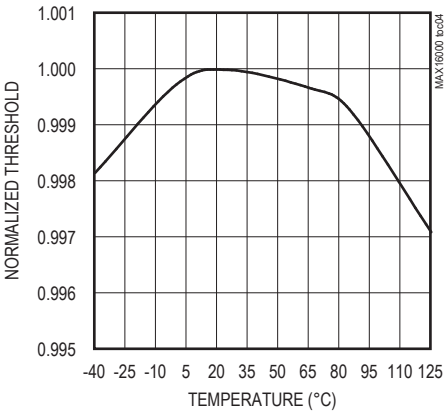

OUTPUT VOLTAGE vs. SINK CURRENT

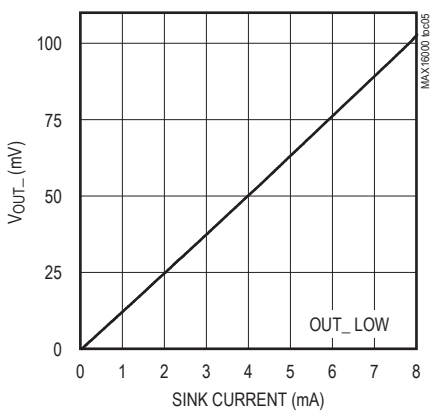

OUTPUT VOLTAGE vs. SOURCE CURRENT

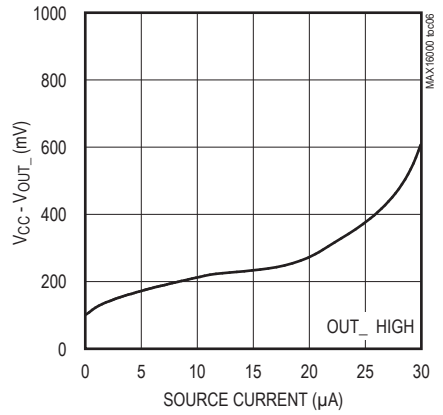

MAXIMUM TRANSIENT DURATION vs. INPUT OVERDRIVE

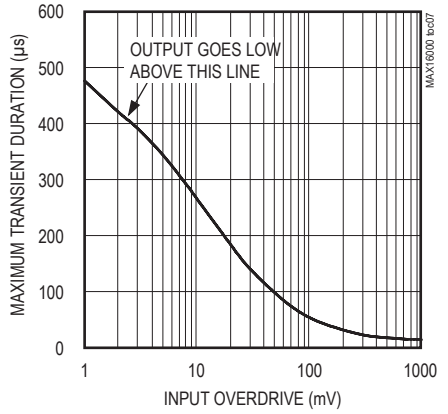

RESET TIMEOUT PERIOD vs. TEMPERATURE

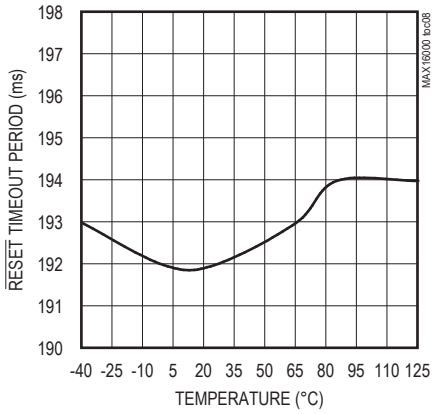

RESET TIMEOUT DELAY

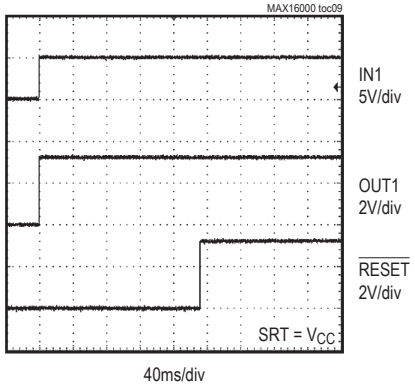

Typical Operating Characteristics (continued)

(V_{CC} = 3.3V, T_A = +25°C, unless otherwise noted.)

$\overline{\text{RESET}}$ TIMEOUT PERIOD vs. C_{SRT}

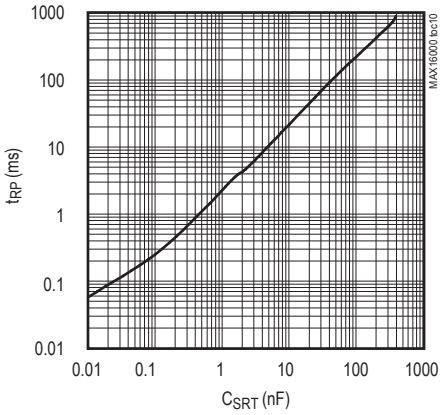

WATCHDOG TIMEOUT PERIOD vs. TEMPERATURE

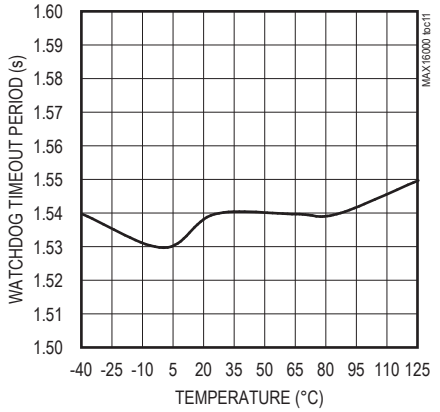

$\overline{\text{MARGIN}}$ ENABLE FUNCTION

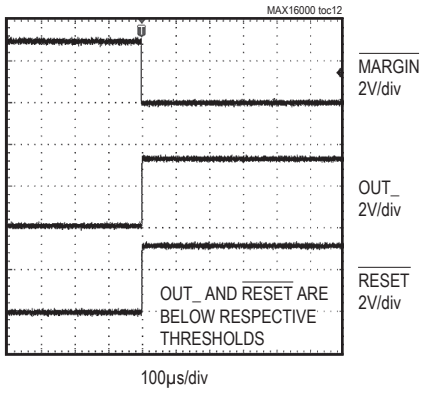

$\overline{\text{MARGIN}}$ DISABLE FUNCTION

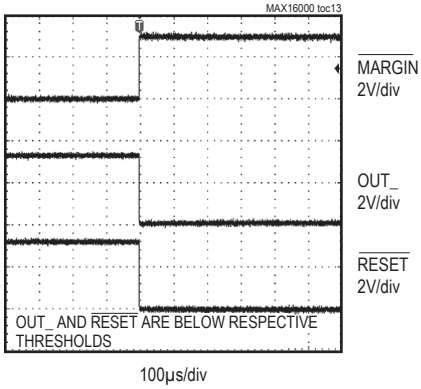

REFERENCE VOLTAGE vs. SOURCE CURRENT

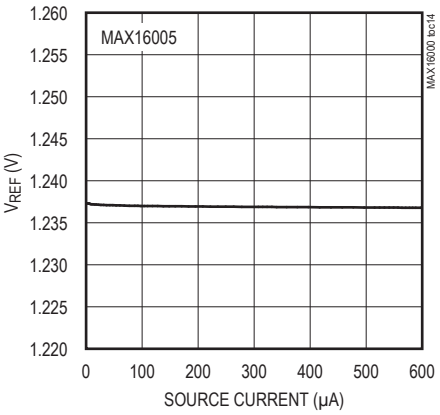

REFERENCE VOLTAGE vs. SUPPLY VOLTAGE

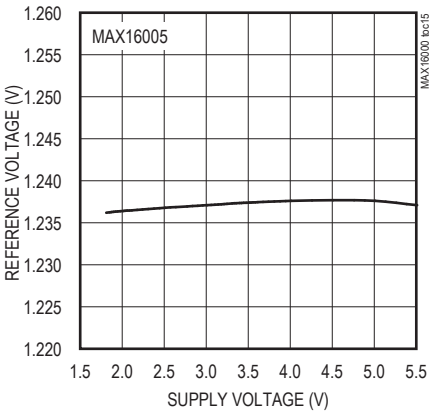

REFERENCE VOLTAGE vs. TEMPERATURE

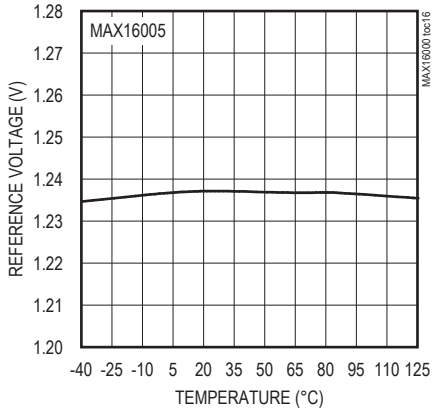

TRANSIENT DURATION vs. V_{CC} TRANSIENT MAGNITUDE

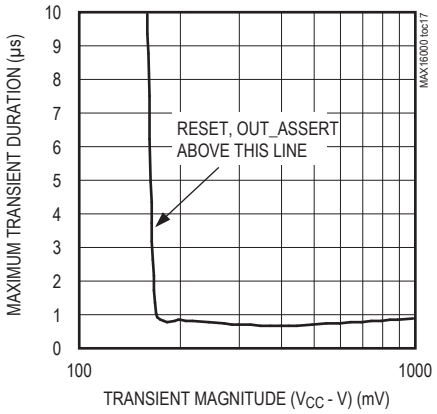

Pin Configurations

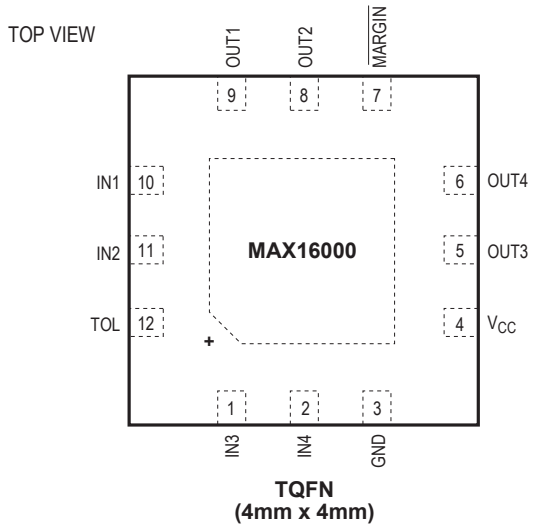

TQFN (4mm x 4mm)

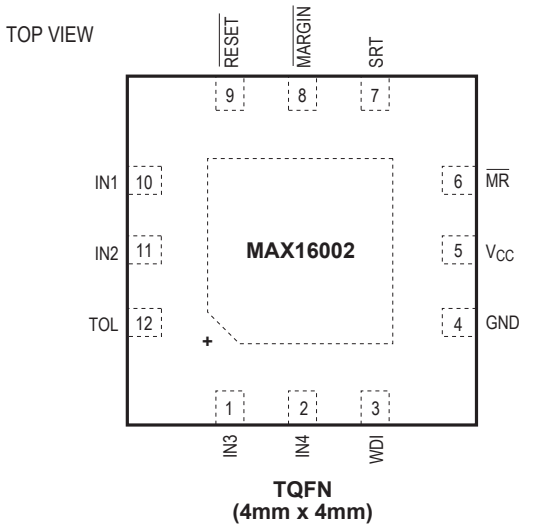

TQFN (4mm x 4mm)

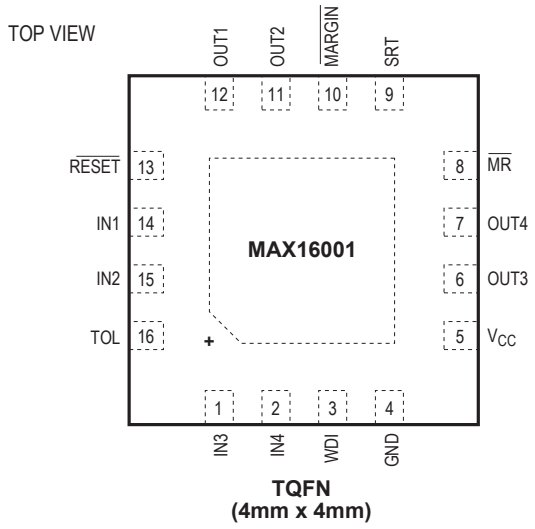

TQFN (4mm x 4mm)

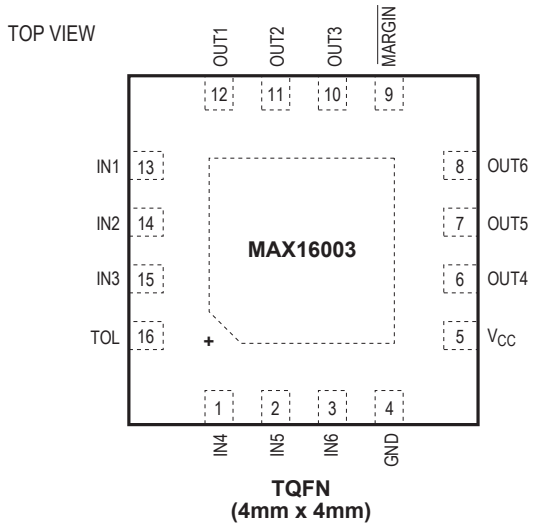

TQFN (4mm x 4mm)

Pin Configurations (continued)

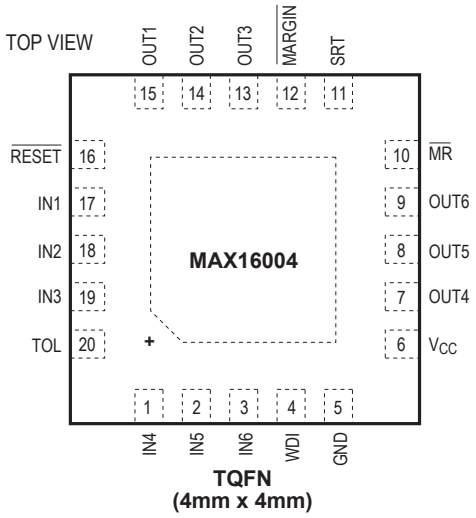

TQFN
(4mm x 4mm)

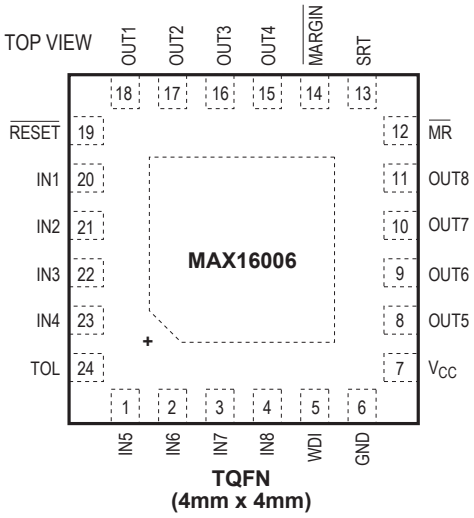

TQFN
(4mm x 4mm)

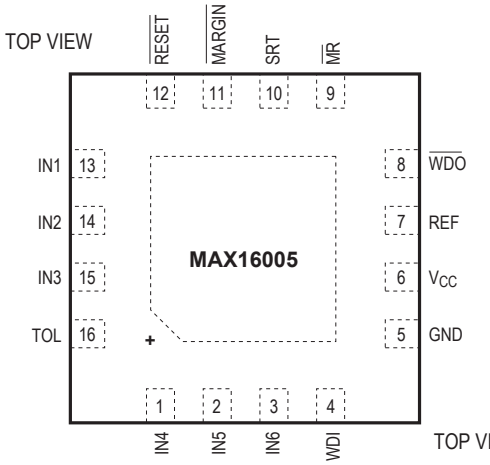

TQFN
(4mm x 4mm)

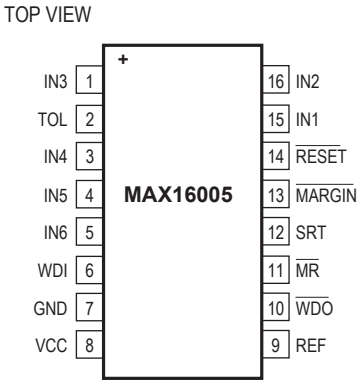

TSSOP

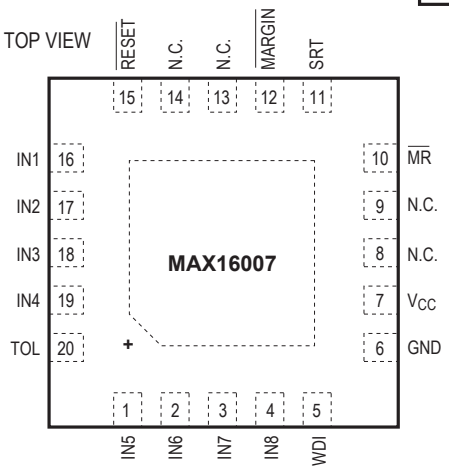

TQFN
(4mm x 4mm)

Pin Description (MAX16000/MAX16001/MAX16002)

PIN			NAME	FUNCTION
MAX16000	MAX16001	MAX16002		
1	1	1	IN3	Monitored Input Voltage 3. See Table 1 for the input voltage threshold.
2	2	2	IN4	Monitored Input Voltage 4. See Table 1 for the input voltage threshold.
3	4	4	GND	Ground
4	5	5	V_{CC}	Unmonitored Power-Supply Input. Bypass V_{CC} with a 0.1µF capacitor to ground. See Power Supply Bypassing section for more detail.
5	6	—	OUT3	Output 3. When the voltage at IN3 falls below its threshold, OUT3 goes low and stays low until the voltage at IN3 exceeds its threshold. The open-drain output has a 30µA internal pullup to V_{CC}.
6	7	—	OUT4	Output 4. When the voltage at IN4 falls below its threshold, OUT4 goes low and stays low until the voltage at IN4 exceeds its threshold. The open-drain output has a 30µA internal pullup to V_{CC}.
7	10	8	$\overline{\text{MARGIN}}$	Active-Low Manual Deassert Input. Pull $\overline{\text{MARGIN}}$ low to deassert all outputs (go into high state), regardless of the voltage at any monitored input.
8	11	—	OUT2	Output 2. When the voltage at IN2 falls below its threshold, OUT2 goes low and stays low until the voltage at IN2 exceeds its threshold. The open-drain output has a 30µA internal pullup to V_{CC}.
9	12	—	OUT1	Output 1. When the voltage at IN1 falls below its threshold, OUT1 goes low and stays low until the voltage at IN1 exceeds its threshold. The open-drain output has a 30µA internal pullup to V_{CC}.
10	14	10	IN1	Monitored Input Voltage 1. See Table 1 for the input voltage threshold.
11	15	11	IN2	Monitored Input Voltage 2. See Table 1 for the input voltage threshold.
12	16	12	TOL	Threshold Tolerance Input. Connect TOL to GND to select 5% threshold tolerance. Connect TOL to V_{CC} to select 10% threshold tolerance.
—	3	3	WDI	Watchdog Timer Input. If WDI remains low or high for longer than the watchdog timeout period, $\overline{\text{RESET}}$ is asserted. The timer clears whenever a reset is asserted or a rising or falling edge on WDI is detected. The watchdog timer enters a startup period that allows 54s for the first transition to occur before a reset. Leave WDI unconnected to disable the watchdog timer. The WDI open-state detector uses a small 400nA current. Therefore, do not connect WDI to anything that will source or sink more than 200nA. Note that the leakage current specification for most three-state drivers exceeds 200nA.
—	8	6	MR	Active-Low Manual Reset Input. Pull $\overline{\text{MR}}$ low to assert $\overline{\text{RESET}}$ low. $\overline{\text{RESET}}$ remains low for the reset timeout period after $\overline{\text{MR}}$ is deasserted. $\overline{\text{MR}}$ is pulled up to V_{CC} through a 20kΩ resistor.
—	9	7	SRT	Set Reset Timeout Input. Connect a capacitor from SRT to GND to set the reset timeout period. The reset timeout period can be calculated as follows: Reset Timeout (s) = 2.06 x 10^6 (Ω) x C_{SRT} (F). For the internal timeout period of 140ms (min), connect SRT to V_{CC}.
—	13	9	$\overline{\text{RESET}}$	Active-Low Reset Output. $\overline{\text{RESET}}$ asserts low when any of the monitored voltages falls below its respective threshold or $\overline{\text{MR}}$ is asserted. $\overline{\text{RESET}}$ remains asserted for the reset timeout period after all monitored voltages exceed their respective thresholds and $\overline{\text{MR}}$ is deasserted. This open-drain output has a 30µA internal pullup.
—	—	—	EP	Exposed Pad. EP is internally connected to GND. Connect EP to the ground plane to provide a low thermal resistance path from the IC junction to the PCB. Do not use as the electrical connection to GND.

Pin Description (MAX16003/MAX16004/MAX16005)

PIN				NAME	FUNCTION
MAX16003	MAX16004	MAX16005 TSSOP	MAX16005 TQFN		
1	1	3	1	IN4	Monitored Input Voltage 4. See Table 1 for the input voltage threshold.
2	2	4	2	IN5	Monitored Input Voltage 5. See Table 1 for the input voltage threshold.
3	3	5	3	IN6	Monitored Input Voltage 6. See Table 1 for the input voltage threshold.
4	5	7	5	GND	Ground
5	6	8	6	V_{CC}	Unmonitored Power-Supply Input. Bypass V_{CC} with a 0.1µF capacitor to ground. See *Power Supply Bypassing* section for more detail.
6	7	—	—	OUT4	Output 4. When the voltage at IN4 falls below its threshold, OUT4 goes low and stays low until the voltage at IN4 exceeds its threshold. The open-drain output has a 30µA internal pullup to V_{CC}.
7	8	—	—	OUT5	Output 5. When the voltage at IN5 falls below its threshold, OUT5 goes low and stays low until the voltage at IN5 exceeds its threshold. The open-drain output has a 30µA internal pullup to V_{CC}.
8	9	—	—	OUT6	Output 6. When the voltage at IN6 falls below its threshold, OUT6 goes low and stays low until the voltage at IN6 exceeds its threshold. The open-drain output has a 30µA internal pullup to V_{CC}.
9	12	13	11	$\overline{MARGIN}$	Manual Deassert Input. Pull $\overline{MARGIN}$ low to deassert all outputs (go into high state), regardless of the voltage at any monitored input.
10	13	—	—	OUT3	Output 3. When the voltage at IN3 falls below its threshold, OUT3 goes low and stays low until the voltage at IN3 exceeds its threshold. The open-drain output has a 30µA internal pullup to V_{CC}.
11	14	—	—	OUT2	Output 2. When the voltage at IN2 falls below its threshold, OUT2 goes low and stays low until the voltage at IN2 exceeds its threshold. The open-drain output has a 30µA internal pullup to V_{CC}.
12	15	—	—	OUT1	Output 1. When the voltage at IN1 falls below its threshold, OUT1 goes low and stays low until the voltage at IN1 exceeds its threshold. The open-drain output has a 30µA internal pullup to V_{CC}.
13	17	15	13	IN1	Monitored Input Voltage 1. See Table 1 for the input voltage threshold.
14	18	16	14	IN2	Monitored Input Voltage 2. See Table 1 for the input voltage threshold.
15	19	1	15	IN3	Monitored Input Voltage 3. See Table 1 for the input voltage threshold.

Pin Description (MAX16003/MAX16004/MAX16005) (continued)

PIN				NAME	FUNCTION
MAX16003	MAX16004	MAX16005 TSSOP	MAX16005 TQFN		
16	20	2	16	TOL	Threshold Tolerance Input. Connect TOL to GND to select 5% threshold tolerance. Connect TOL to V_{CC} to select 10% threshold tolerance.
—	4	6	4	WDI	Watchdog Timer Input. **MAX16004:** If WDI remains low or high for longer than the watchdog timeout period, $\overline{RESET}$ is asserted and the timer is cleared. The timer also clears whenever a reset is asserted or a rising or falling edge on WDI is detected. The watchdog timer enters a startup period that allows 54s for the first transition to occur before a reset. Leave WDI unconnected to disable the watchdog timer. **MAX16005:** If WDI remains low or high for longer than the watchdog timeout period, $\overline{WDO}$ is asserted. The timer clears whenever a rising or falling edge on WDI is detected. Leave WDI unconnected to disable the watchdog timer. The MAX16005 does not have a startup period. **MAX16004/MAX16005:** The WDI open-state detector uses a small 100nA current. Therefore, do not connect WDI to anything that will source or sink more than 50nA. Note that the leakage current specification for most three-state drivers exceeds 50nA.
—	10	11	9	$\overline{MR}$	Active-Low Manual Reset Input. Pull $\overline{MR}$ low to assert $\overline{RESET}$ low. $\overline{RESET}$ remains low for the reset timeout period after $\overline{MR}$ is deasserted. $\overline{MR}$ is pulled up to V_{CC} through a 20kΩ resistor.
—	11	12	10	SRT	Set Reset Timeout Input. Connect a capacitor from SRT to GND to set the reset timeout period. The reset timeout period can be calculated as follows: Reset Timeout (s) = 2.06 x 10^6 (Ω) x C_{SRT} (F). For the internal timeout period of 140ms (min), connect SRT to V_{CC}.
—	16	14	12	$\overline{RESET}$	Active-Low Reset Output. $\overline{RESET}$ asserts low when any of the monitored voltages falls below its respective threshold or $\overline{MR}$ is asserted. $\overline{RESET}$ remains asserted for the reset timeout period after all monitored voltages exceed their respective thresholds and $\overline{MR}$ is deasserted. This open-drain output has a 30µA internal pullup.
—	—	9	7	REF	Reference Output. The reference output voltage of 1.23V can source up to 40µA.
—	—	10	8	$\overline{WDO}$	Active-Low Watchdog Output. $\overline{WDO}$ asserts and stays low whenever any of the IN_ inputs fall below their respective thresholds. $\overline{WDO}$ deasserts without a timeout delay when all the IN_ inputs rise above their thresholds. When all the IN_ inputs rise above their thresholds, $\overline{WDO}$ asserts low whenever the watchdog timer times out. $\overline{WDO}$ deasserts after a valid WDI transition or if $\overline{MR}$ is pulled low. The watchdog timer begins counting after the reset timeout period once $\overline{MR}$ goes high. Pull $\overline{MARGIN}$ low to deassert $\overline{WDO}$.
—	—	—	—	EP	Exposed Pad. EP is internally connected to GND. Connect EP to the ground plane to provide a low thermal resistance path from the IC junction to the PCB. Do not use as the electrical connection to GND.

Pin Description (MAX16006/MAX16007)

PIN		NAME	FUNCTION
MAX16006	MAX16007		
1	1	IN5	Monitored Input Voltage 5. See Table 1 for the input voltage threshold.
2	2	IN6	Monitored Input Voltage 6. See Table 1 for the input voltage threshold.
3	3	IN7	Monitored Input Voltage 7. See Table 1 for the input voltage threshold.
4	4	IN8	Monitored Input Voltage 8. See Table 1 for the input voltage threshold.
5	5	WDI	Watchdog Timer Input. If WDI remains low or high for longer than the watchdog timeout period, $\overline{RESET}$ is asserted and the timer is cleared. The timer also clears whenever a reset is asserted or a rising or falling edge on WDI is detected. The watchdog timer enters a startup period that allows 54s for the first transition to occur before a reset. Leave WDI unconnected to disable the watchdog timer. The WDI open-state detector uses a small 400nA current. Therefore, do not connect WDI to anything that will source or sink more than 200nA. Note that the leakage current specification for most three-state drivers exceeds 200nA.
6	6	GND	Ground
7	7	V_{CC}	Unmonitored Power-Supply Input. Bypass V_{CC} with a 0.1µF capacitor to ground. See *Power Supply Bypassing* section for more detail.
8	—	OUT5	Output 5. When the voltage at IN5 falls below its threshold, OUT5 goes low and stays low until the voltage at IN5 exceeds its threshold. The open-drain output has a 30µA internal pullup to V_{CC}.
9	—	OUT6	Output 6. When the voltage at IN6 falls below its threshold, OUT6 goes low and stays low until the voltage at IN6 exceeds its threshold. The open-drain output has a 30µA internal pullup to V_{CC}.
10	—	OUT7	Output 7. When the voltage at IN7 falls below its threshold, OUT7 goes low and stays low until the voltage at IN7 exceeds its threshold. The open-drain output has a 30µA internal pullup to V_{CC}.
11	—	OUT8	Output 8. When the voltage at IN8 falls below its threshold, OUT8 goes low and stays low until the voltage at IN8 exceeds its threshold. The open-drain output has a 30µA internal pullup to V_{CC}.
12	10	$\overline{MR}$	Active-Low Manual Reset Input. Pull $\overline{MR}$ low to assert $\overline{RESET}$ low. $\overline{RESET}$ remains low for the reset timeout period after $\overline{MR}$ is deasserted. $\overline{MR}$ is pulled up to V_{CC} through a 20kΩ resistor.
13	11	SRT	Set Reset Timeout Input. Connect a capacitor from SRT to GND to set the reset timeout period. The reset timeout period can be calculated as follows: Reset Timeout (s) = 2.06 x 10^6 (Ω) x C_{SRT} (F). For the internal timeout period of 140ms (min), connect SRT to V_{CC}.

Pin Description (MAX16006/MAX16007) (continued)

PIN		NAME	FUNCTION
MAX16006	MAX16007		
14	12	$\overline{\text{MARGIN}}$	Margin Disable Input. Pull $\overline{\text{MARGIN}}$ low to deassert all outputs (go into high state), regardless of the voltage at any monitored input.
15	—	OUT4	Output 4. When the voltage at IN4 falls below its threshold, OUT4 goes low and stays low until the voltage at IN4 exceeds its threshold. The open-drain output has a 30µA internal pullup to V_{CC}.
16	—	OUT3	Output 3. When the voltage at IN3 falls below its threshold, OUT3 goes low and stays low until the voltage at IN3 exceeds its threshold. The open-drain output has a 30µA internal pullup to V_{CC}.
17	—	OUT2	Output 2. When the voltage at IN2 falls below its threshold, OUT2 goes low and stays low until the voltage at IN2 exceeds its threshold. The open-drain output has a 30µA internal pullup to V_{CC}.
18	—	OUT1	Output 1. When the voltage at IN1 falls below its threshold, OUT1 goes low and stays low until the voltage at IN1 exceeds its threshold. The open-drain output has a 30µA internal pullup to V_{CC}.
19	15	$\overline{\text{RESET}}$	Active-Low Reset Output. $\overline{\text{RESET}}$ asserts low when any of the monitored voltages falls below its respective threshold or $\overline{\text{MR}}$ is asserted. $\overline{\text{RESET}}$ remains asserted for the reset timeout period after all monitored voltages exceed their respective thresholds and $\overline{\text{MR}}$ is deasserted. This open-drain output has a 30µA internal pullup.
20	16	IN1	Monitored Input Voltage 1. See Table 1 for the input voltage threshold.
21	17	IN2	Monitored Input Voltage 2. See Table 1 for the input voltage threshold.
22	18	IN3	Monitored Input Voltage 3. See Table 1 for the input voltage threshold.
23	19	IN4	Monitored Input Voltage 4. See Table 1 for the input voltage threshold.
24	20	TOL	Threshold Tolerance Input. Connect TOL to GND to select 5% threshold tolerance. Connect TOL to V_{CC} to select 10% threshold tolerance.
—	8, 9, 13, 14	N.C.	Not Internally Connected
—	—	EP	Exposed Pad. EP is internally connected to GND. Connect EP to the ground plane to provide a low thermal resistance path from the IC junction to the PCB. Do not use as the electrical connection to GND.

Table 1. Input-Voltage-Threshold Selector

PART	IN1	IN2	IN3	IN4	IN5	IN6	IN7	IN8
MAX16000A	3.3	2.5	ADJ	1.8	—	—	—	—
MAX16000B	3.3	ADJ	ADJ	1.8	—	—	—	—
MAX16000C	ADJ	2.5	ADJ	1.8	—	—	—	—
MAX16000D	3.3	2.5	ADJ	ADJ	—	—	—	—
MAX16000E	ADJ	ADJ	ADJ	ADJ	—	—	—	—
MAX16001A	3.3	2.5	ADJ	1.8	—	—	—	—
MAX16001B	3.3	ADJ	ADJ	1.8	—	—	—	—
MAX16001C	ADJ	2.5	ADJ	1.8	—	—	—	—
MAX16001D	3.3	2.5	ADJ	ADJ	—	—	—	—
MAX16001E	ADJ	ADJ	ADJ	ADJ	—	—	—	—
MAX16002A	3.3	2.5	ADJ	1.8	—	—	—	—
MAX16002B	3.3	ADJ	ADJ	1.8	—	—	—	—
MAX16002C	ADJ	2.5	ADJ	1.8	—	—	—	—
MAX16002D	3.3	2.5	ADJ	ADJ	—	—	—	—
MAX16002E	ADJ	ADJ	ADJ	ADJ	—	—	—	—
MAX16003A	3.3	2.5	ADJ	1.8	ADJ	ADJ	—	—
MAX16003B	3.3	ADJ	ADJ	1.8	ADJ	ADJ	—	—
MAX16003C	3.3	2.5	ADJ	ADJ	ADJ	ADJ	—	—
MAX16003D	ADJ	2.5	ADJ	1.8	ADJ	ADJ	—	—
MAX16003E	ADJ	ADJ	ADJ	ADJ	ADJ	ADJ	—	—
MAX16004A	3.3	2.5	ADJ	1.8	ADJ	ADJ	—	—
MAX16004B	3.3	ADJ	ADJ	1.8	ADJ	ADJ	—	—
MAX16004C	3.3	2.5	ADJ	ADJ	ADJ	ADJ	—	—
MAX16004D	ADJ	2.5	ADJ	1.8	ADJ	ADJ	—	—
MAX16004E	ADJ	ADJ	ADJ	ADJ	ADJ	ADJ	—	—
MAX16005A	3.3	2.5	ADJ	1.8	ADJ	ADJ	—	—
MAX16005B	3.3	ADJ	ADJ	1.8	ADJ	ADJ	—	—
MAX16005C	3.3	2.5	ADJ	ADJ	ADJ	ADJ	—	—
MAX16005D	ADJ	2.5	ADJ	1.8	ADJ	ADJ	—	—
MAX16005E	ADJ	ADJ	ADJ	ADJ	ADJ	ADJ	—	—
MAX16006A	3.3	2.5	ADJ	1.8	ADJ	ADJ	ADJ	ADJ
MAX16006B	3.3	ADJ	ADJ	1.8	ADJ	ADJ	ADJ	ADJ
MAX16006C	3.3	2.5	ADJ	ADJ	ADJ	ADJ	ADJ	ADJ
MAX16006D	ADJ	2.5	ADJ	1.8	ADJ	ADJ	ADJ	ADJ
MAX16006E	ADJ	ADJ	ADJ	ADJ	ADJ	ADJ	ADJ	ADJ
MAX16006F	5.0	3.3	3.0	2.5	1.8	1.5	1.2	0.9
MAX16007A	3.3	2.5	ADJ	1.8	ADJ	ADJ	ADJ	ADJ
MAX16007B	3.3	ADJ	ADJ	1.8	ADJ	ADJ	ADJ	ADJ
MAX16007C	3.3	2.5	ADJ	ADJ	ADJ	ADJ	ADJ	ADJ
MAX16007D	ADJ	2.5	ADJ	1.8	ADJ	ADJ	ADJ	ADJ
MAX16007E	ADJ	ADJ	ADJ	ADJ	ADJ	ADJ	ADJ	ADJ

Note: *Other fixed thresholds may be available. Contact factory for availability.*

Functional Diagrams

MAX16000D Functional Diagram

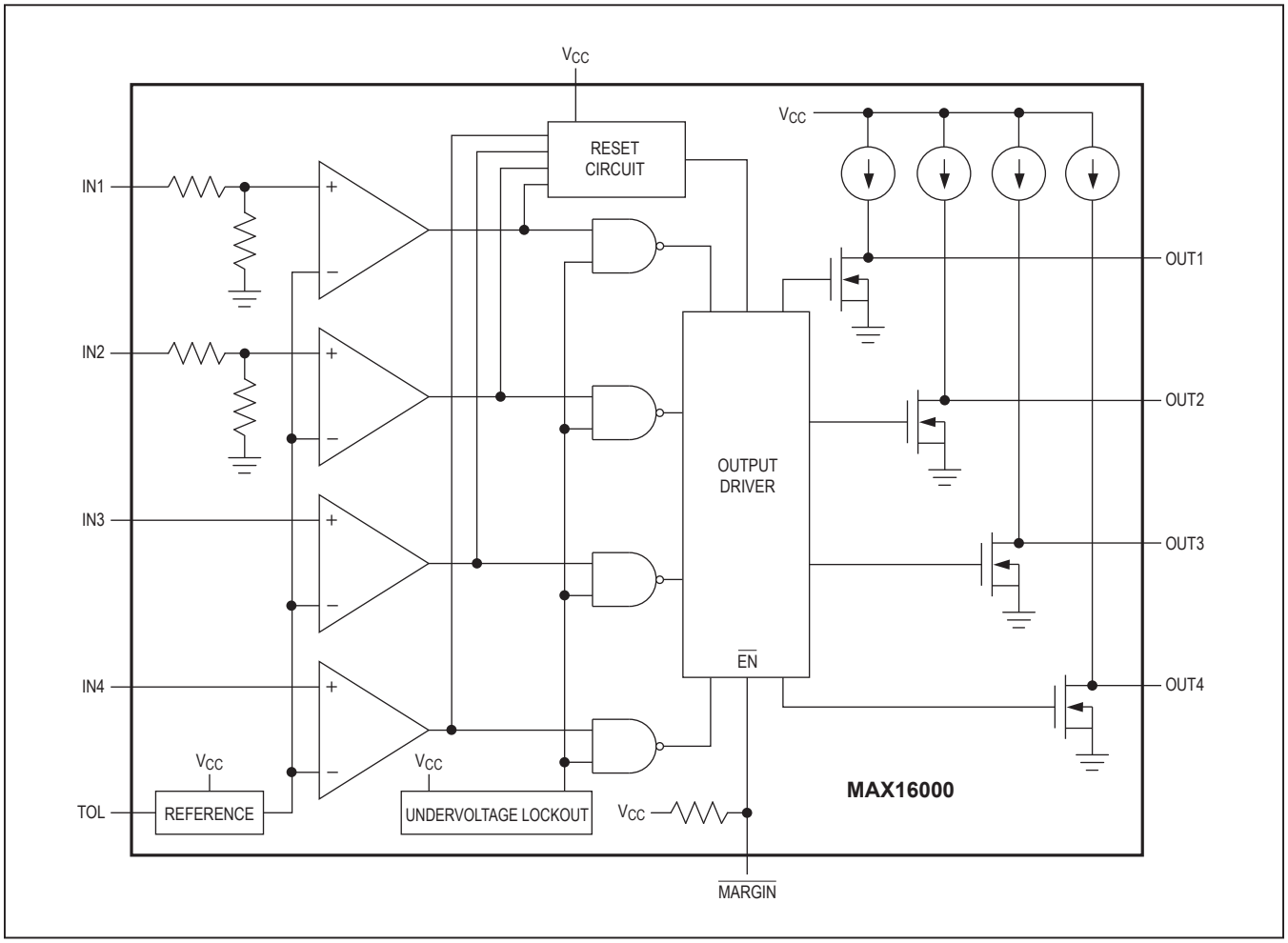

Functional Diagrams (continued)

MAX16001D/MAX16002D Functional Diagram

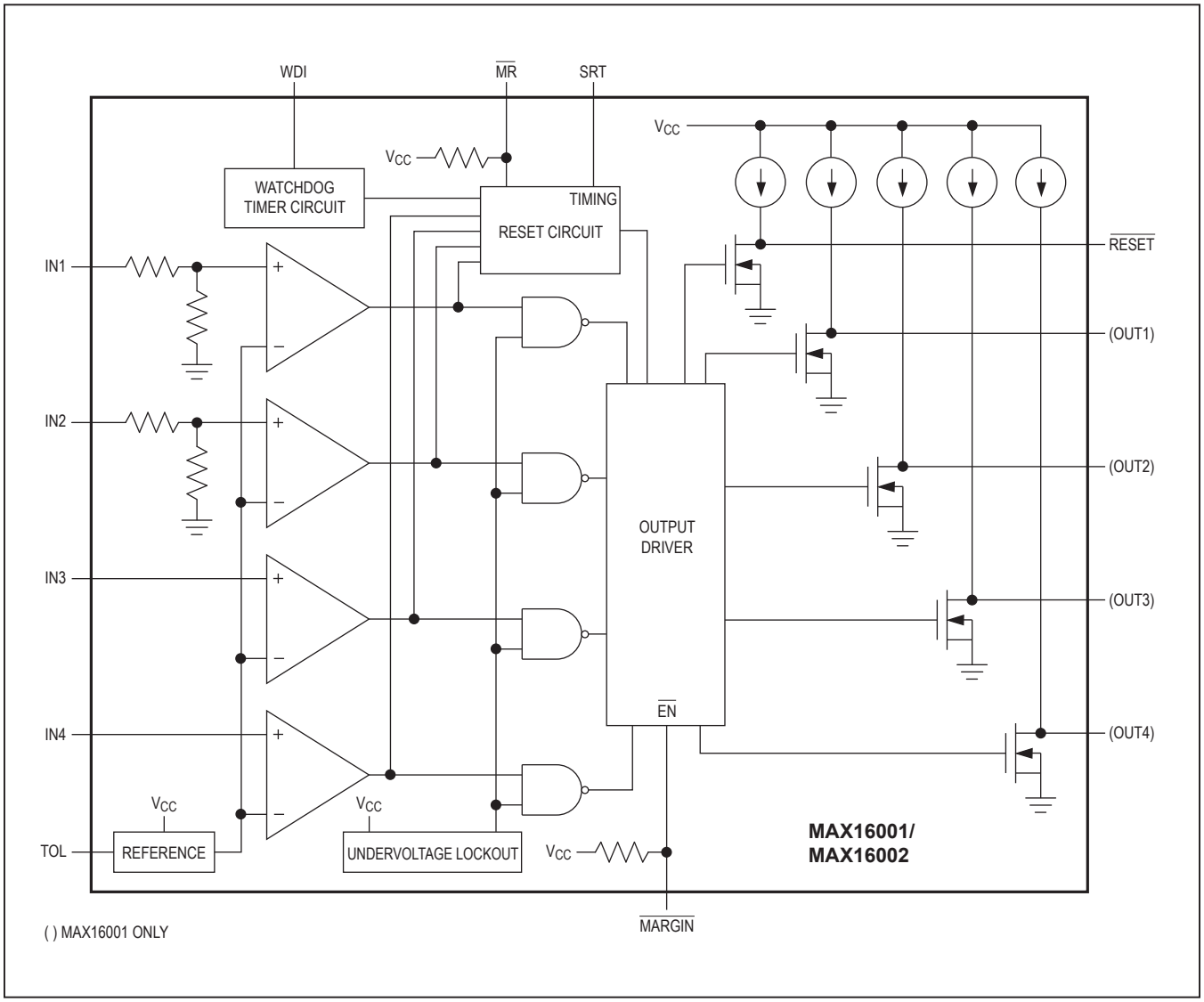

Functional Diagrams (continued)

MAX16003C/MAX16004C Functional Diagram

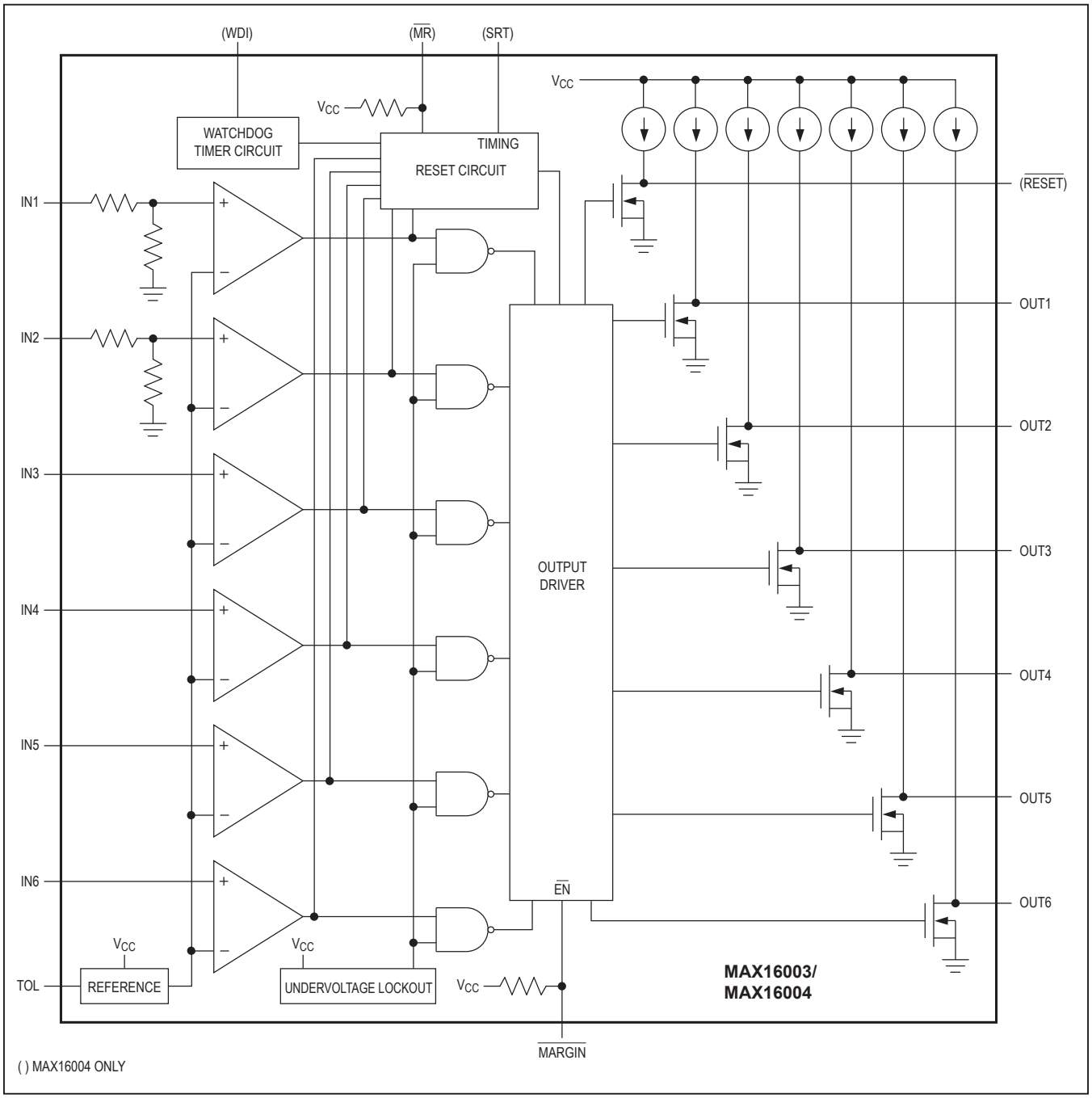

Functional Diagrams (continued)

MAX16005C Functional Diagram

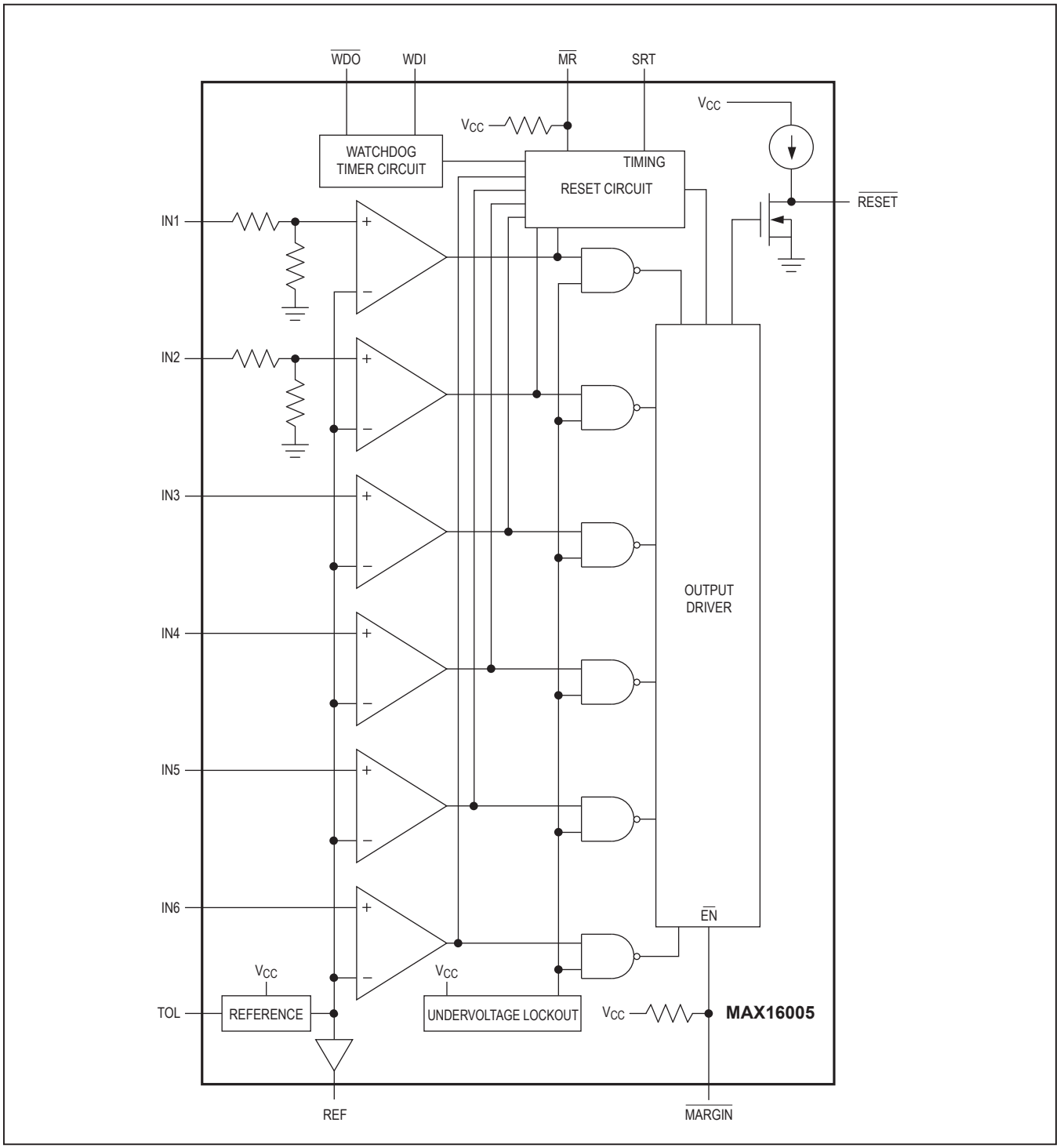

Functional Diagrams (continued)

MAX16006C/MAX16007C Functional Diagram

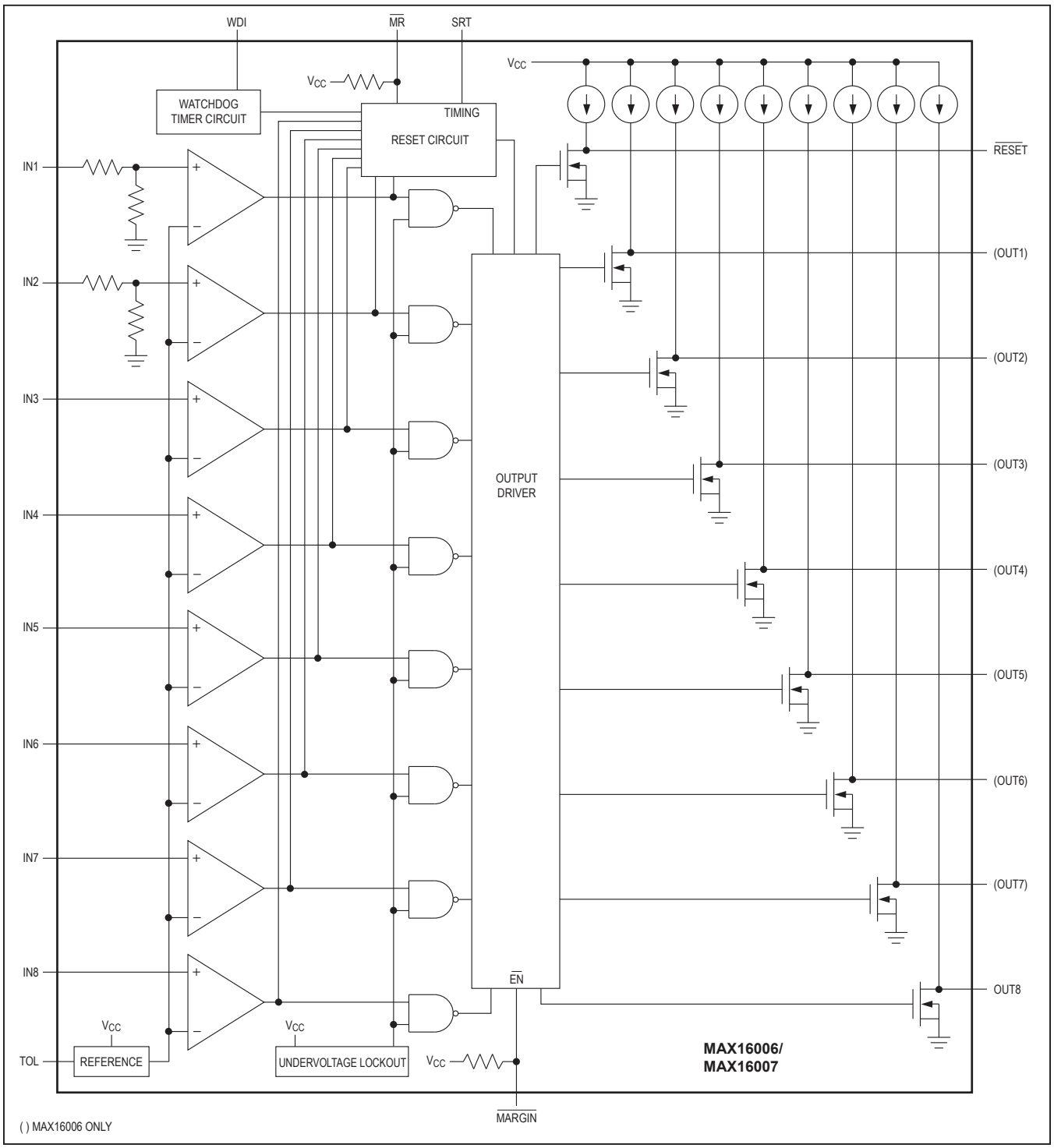

Detailed Description

The MAX16000–MAX16007 are low-voltage, quad/hex/octal-voltage µP supervisors in small TQFN and TSSOP packages. These devices provide supervisory functions for complex multivoltage systems. The MAX16000/MAX16001/MAX16002 monitor four voltages, the MAX16003/MAX16004/MAX16005 monitor six voltages, and the MAX16006/MAX16007 monitor eight voltages.

The MAX16000/MAX16001/MAX16003/MAX16004/MAX16006 offer independent outputs for each monitored voltage. The MAX16001/MAX16002/MAX16004–MAX16007 offer a reset output that asserts whenever any of the monitored voltages fall below their respective thresholds or the manual reset input is asserted. The reset output remains asserted for the reset timeout after all voltages are above their respective thresholds and the manual reset input is deasserted. The minimum reset timeout is internally set to 140ms or can be adjusted with an external capacitor.

All open-drain outputs have internal 30µA pullups that eliminate the need for external pullup resistors. However, each output can be driven with an external voltage up to 5.5V. Other features offered include a manual reset input, a tolerance pin for selecting 5% or 10% input thresholds, and a margin enable function for deasserting the outputs during margin testing.

The MAX16001/MAX16002/MAX16004–MAX16007 offer a watchdog timer that asserts $\overline{\text{RESET}}$ or an independent watchdog output (MAX16005) when the watchdog timeout period (1.6s typ) is exceeded. The watchdog timer can be disabled by leaving input open.

Applications Information

Undervoltage-Detection Circuit

The open-drain outputs of the MAX16000–MAX16007 can be configured to detect an undervoltage condition. Figure 1 shows a configuration where an LED turns on when the comparator output is low, indicating an undervoltage condition. These devices can also be used in applications such as system supervisory monitoring, multivoltage level detection, and V_{CC} bar-graph monitoring (Figure 2).

Tolerance (TOL)

The MAX16000–MAX16007 feature a pin-selectable threshold tolerance. Connect TOL to GND to select 5% threshold tolerance. Connect TOL to VCC to select 10% threshold tolerance.

Window Detection

A window detector circuit uses two auxiliary inputs in the configuration shown in Figure 3. External resistors set the two threshold voltages of the window detector circuit. External logic gates create the OUT signal. The window detection width is the difference between the threshold voltages (Figure 4).

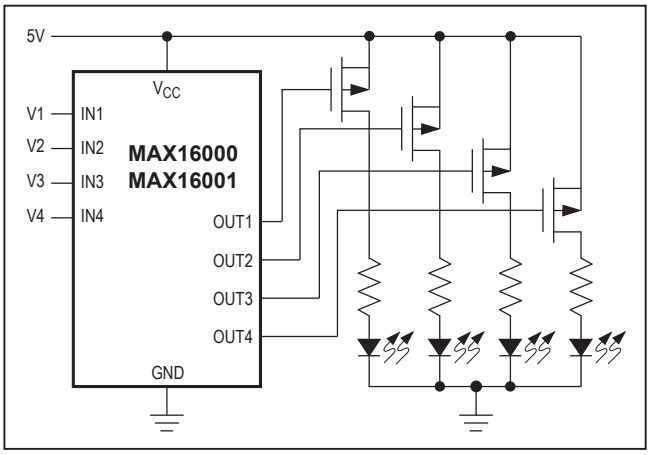

Figure 1. Quad Undervoltage Detector with LED Indicators

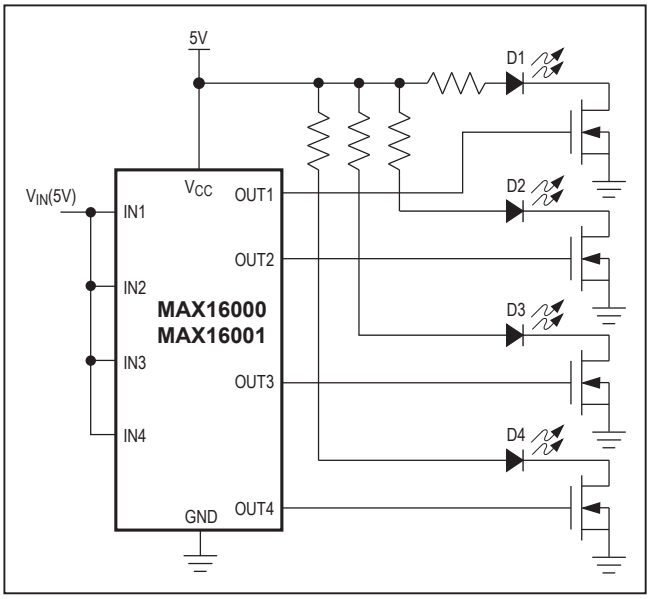

Figure 2. V_{CC} Bar-Graph Monitoring

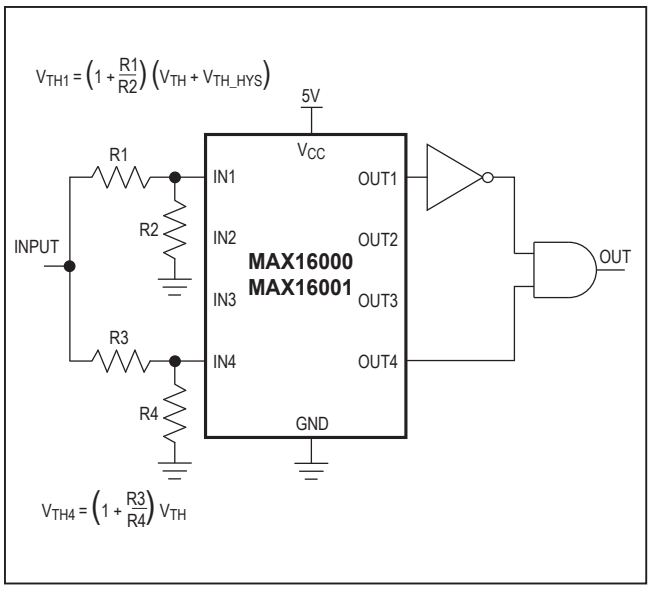

Figure 3. Window Detection

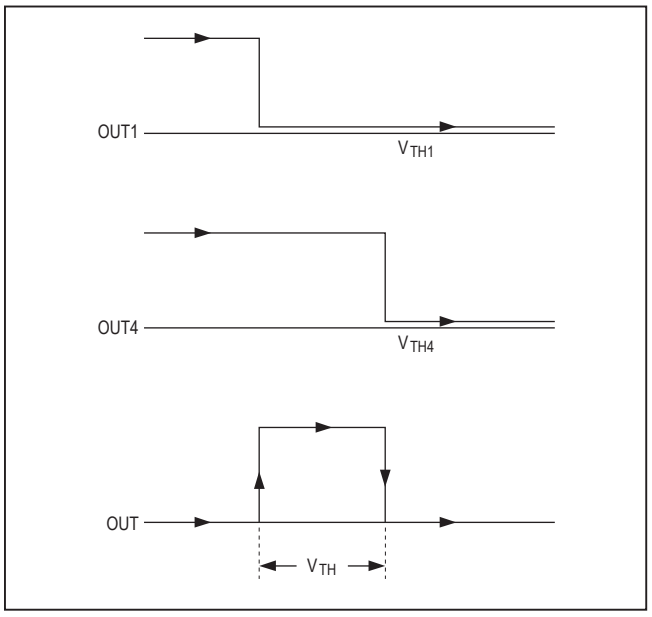

Figure 4. Output Response of Window Detector Circuit

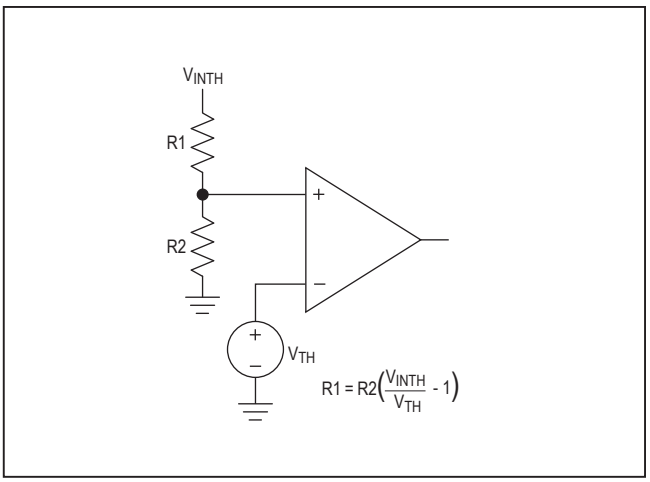

Figure 5. Setting the Adjustable Input

Adjustable Input

These devices offer several monitor options with adjustable input thresholds (see Table 1). The threshold voltage at each adjustable IN_ input is typically 0.394V (TOL = GND) or 0.372 (TOL = V_{CC}). To monitor a voltage V_{INTH}, connect a resistive-divider network to the circuit as shown in Figure 5.

$$V_{INTH} = V_{TH} ((R1 / R2) + 1)$$

$$R1 = R2 ((V_{INTH} / V_{TH}) - 1)$$

Large resistors can be used to minimize current through the external resistors. For greater accuracy, use lower-value resistors.

Unused Inputs

Connect any unused IN_ inputs to a voltage above its threshold.

OUT_ Outputs (MAX16000/MAX16001/MAX16003/ MAX16004/MAX16006)

The OUT_ outputs go low when their respective IN_ inputs drop below their specified thresholds. The output is open drain with a 30µA internal pullup to V_{CC}. For many applications, no external pullup resistor is required to interface with other logic devices. An external pullup resistor to any voltage from 0 to 5.5V overrides the internal pullup if interfacing to different logic supply voltages. Internal circuitry prevents reverse current flow from the external pullup voltage to V_{CC} (Figure 6).

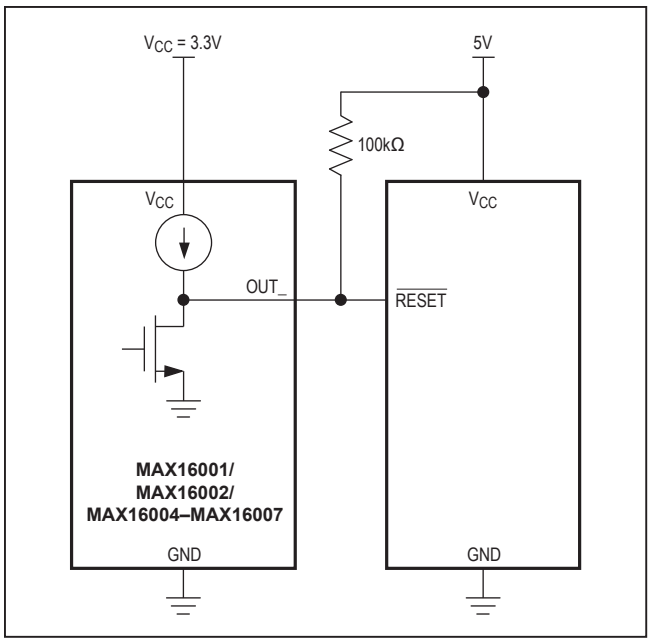

Figure 6. Interfacing to a Different Logic Supply Voltage

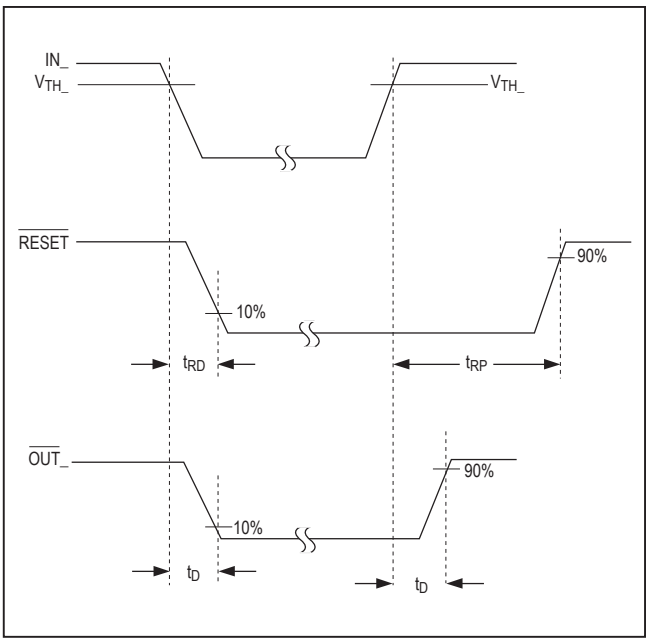

Figure 7. Output Timing Diagram

$\overline{\text{RESET}}$ Output (MAX16001/MAX16002/ MAX16004–MAX16007)

$\overline{\text{RESET}}$ asserts low when any of the monitored voltages fall below their respective thresholds or $\overline{\text{MR}}$ is asserted. $\overline{\text{RESET}}$ remains asserted for the reset timeout period after all monitored voltages exceed their respective thresholds and $\overline{\text{MR}}$ is deasserted (see Figure 7). This open-drain output has a 30µA internal pullup. An external pullup resistor to any voltage from 0 to 5.5V overrides the internal pullup if interfacing to different logic supply voltages. Internal circuitry prevents reverse current flow from the external pullup voltage to V_{CC} (Figure 6).

$\overline{\text{WDO}}$ (MAX16005 Only)

$\overline{\text{WDO}}$ asserts and stays low whenever any of the IN_ inputs fall below their respective thresholds. $\overline{\text{WDO}}$ deasserts without a timeout delay when all the IN_inputs rise above their thresholds. When all the IN_ inputs rise above their thresholds, $\overline{\text{WDO}}$ asserts low whenever the watchdog timer times out. $\overline{\text{WDO}}$ deasserts after a valid WDI transition or if $\overline{\text{MR}}$ is pulled low. The watchdog timer begins counting after the reset timeout period once $\overline{\text{MR}}$ goes high. Pull $\overline{\text{MARGIN}}$ low to deassert $\overline{\text{WDO}}$ regardless of any other condition. The watchdog timer continues to run when $\overline{\text{MARGIN}}$ is low and if a timeout occurs. $\overline{\text{WDO}}$ will assert $\overline{\text{MR}}$ after $\overline{\text{MARGIN}}$ is deasserted. This open-drain output has a 30µA internal pullup. An external pullup resistor to any voltage from 0 to 5.5V overrides the internal pullup if interfacing to different logic supply voltages. Internal circuitry prevents reverse current flow from the external pullup voltage to V_{CC} (Figure 6).

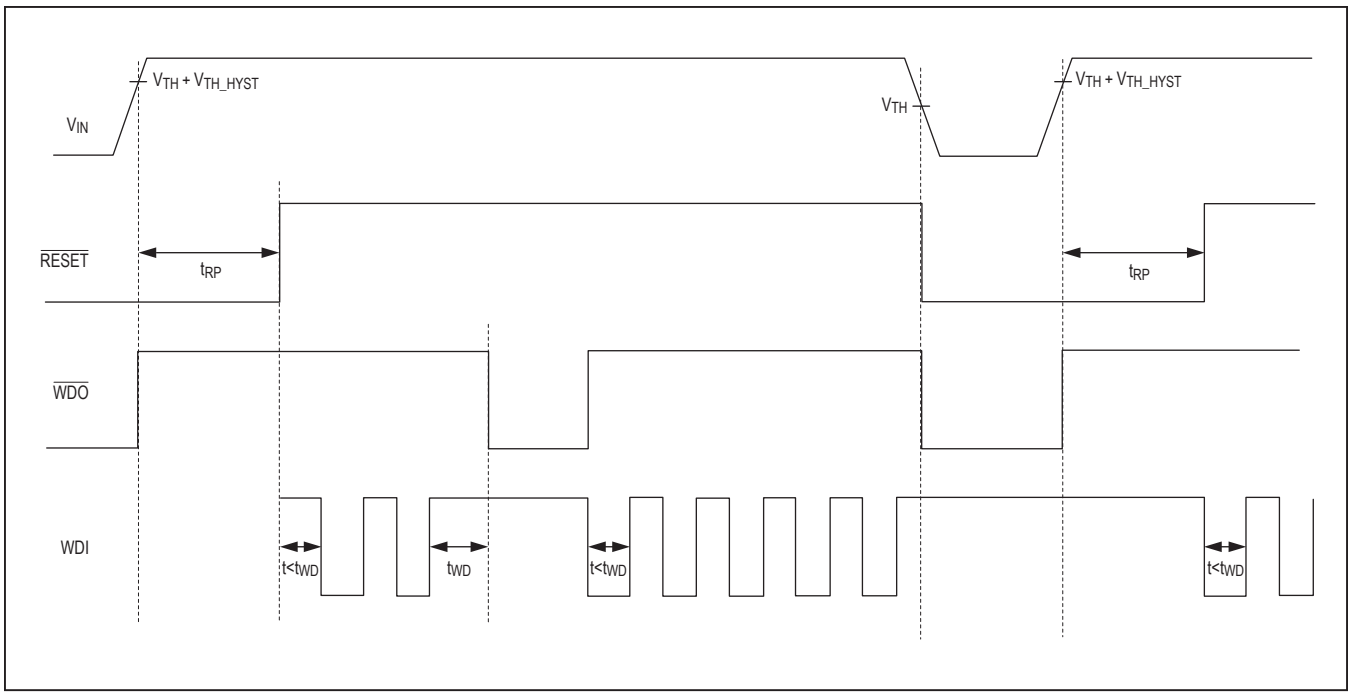

Figure 8. $\overline{WDO}$ Timing Related to V_{TH} and t_{RP}

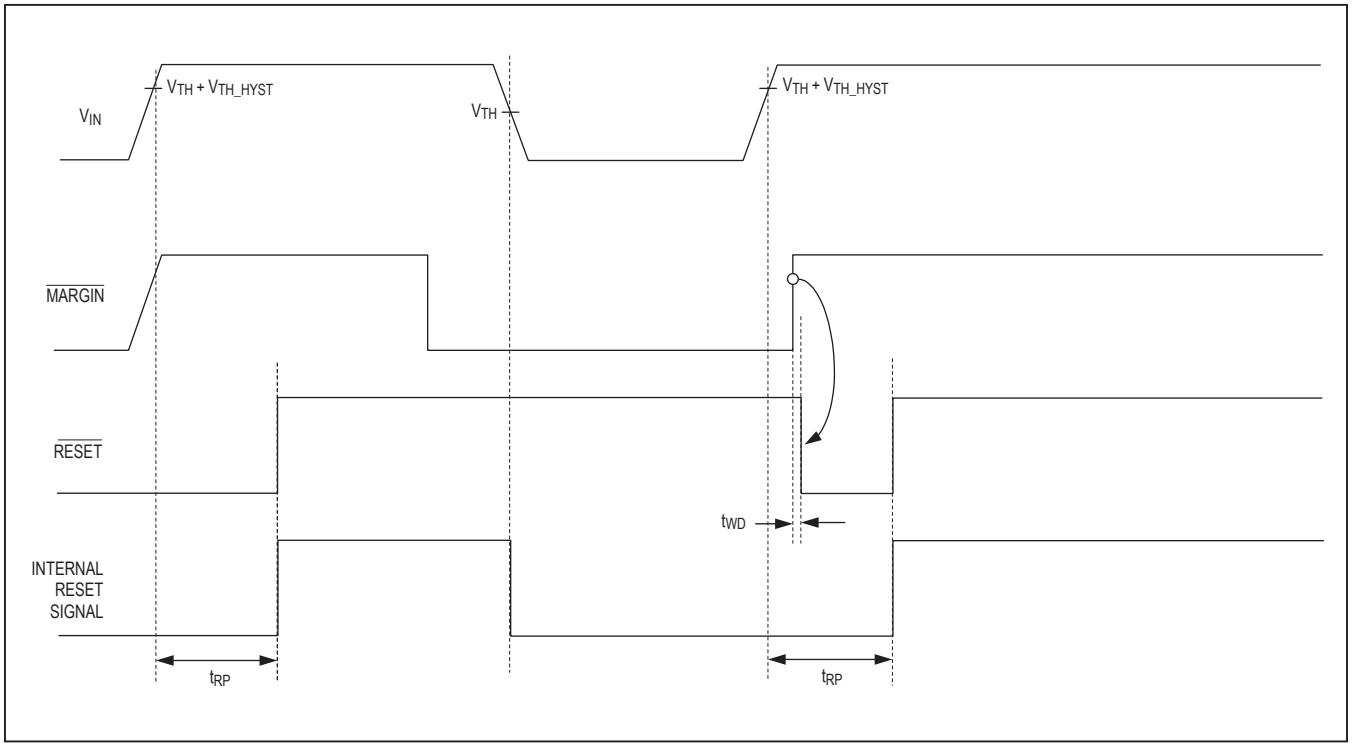

Figure 9. Margin Output Disable ($\overline{MARGIN}$) Affect on $\overline{RESET}$ within t_{RP}

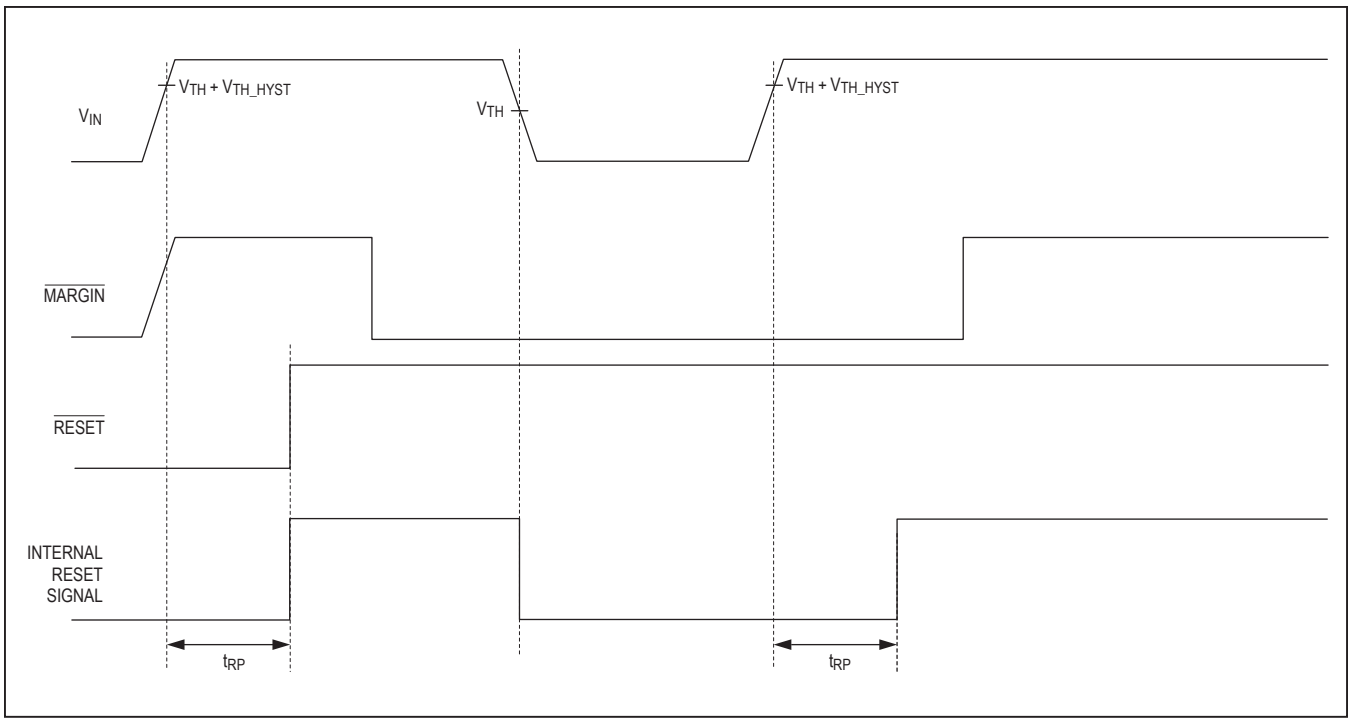

Figure 10. Margin Output Disable (MARGIN) Affect on RESET Outside t_{RP}

Reset Timeout Capacitor

The reset timeout period can be adjusted to accommodate a variety of µP applications from 50µs to 1.12s. Adjust the reset timeout period (t_{RP}) by connecting a capacitor (C_{SRT}) between SRT and GND. Calculate the reset timeout capacitor as follows:

$$C_{SRT}(F) = \frac{t_{RP}(s) \times I_{SRT}}{V_{TH_SRT}}$$

Connect SRT to V_{CC} for a factory-programmed reset timeout of 140ms (min).

Manual Reset Input (MR) (MAX16001/MAX16002/ MAX16004–MAX16007)

Many µP-based products require manual reset capability, allowing the operator, a test technician, or external logic circuitry to initiate a reset. A logic-low on MR asserts RESET low. RESET remains asserted while MR is low, and during the reset timeout period (140ms min) after MR returns high. The MR input has an internal 20kΩ pullup resistor to V_{CC}, so it can be left unconnected if not used. MR can be driven with TTL or CMOS-logic levels, or with open-drain/collector outputs. Connect a normally open momentary switch from MR to GND to create a manual reset function. External debounce circuitry is not required. If MR is driven from long cables or if the device is used in a noisy environment, connecting a 0.1µF capacitor from MR to GND provides additional noise immunity.

Margin Output Disable (MARGIN)

MARGIN allows system-level testing while power supplies are adjusted from their nominal voltages. Drive MARGIN low to force RESET, WDO, and OUT_ high, regardless of the voltage at any monitored input. The state of each output does not change while MARGIN = GND. The watchdog timer continues to run when MARGIN is low, and if a timeout occurs, WDO/RESET will assert t_{MD} after MARGIN is deasserted.

The MARGIN input is internally pulled up to V_{CC}. Leave MARGIN unconnected or connect to V_{CC} if unused.

Power-Supply Bypassing

The MAX16000–MAX16007 operate from a 2.0V to 5.5V supply. An undervoltage lockout ensures that the outputs are in the correct states when the UVLO is exceeded. In noisy applications, bypass V_{CC} to ground with a 0.1µF capacitor as close to the device as possible. The additional capacitor improves transient immunity. For V_{CC} transients with high slew rates, place an RC lowpass filter in front of V_{CC}, where R can be up to 100Ω.

Ordering Information

PART	TEMP RANGE	PIN-PACKAGE
MAX16000_TC+	-40°C to +125°C	12 TQFN-EP*
MAX16001_TE+	-40°C to +125°C	16 TQFN-EP*
MAX16001_TE/V	-40°C to +125°C	16 TQFN-EP*
MAX16001ATE/V+	-40°C to +125°C	16 TQFN-EP*
MAX16001DTE/V+	-40°C to +125°C	16 TQFN-EP*
MAX16002_TC+	-40°C to +125°C	12 TQFN-EP*
MAX16003_TE+	-40°C to +125°C	16 TQFN-EP*
MAX16004_TP+	-40°C to +125°C	20 TQFN-EP*
MAX16005_TE+	-40°C to +125°C	16 TQFN-EP*
MAX16005_UE+	-40°C to +125°C	16 TSSOP
MAX16006_TG+	-40°C to +125°C	24 TQFN-EP*
MAX16007_TP+	-40°C to +125°C	20 TQFN-EP*

Note: *The "_" is a placeholder for the input voltage threshold. See Table 1*
+Denotes a lead(Pb)-free/RoHS-compliant package.
For tape-and-reel, add a "T" after the "+." Tape-and-reel are offered in 2.5k increments.
**EP = Exposed pad.*
/V denotes an automotive qualified part.

Chip Information

PROCESS: BiCMOS

Selector Guide

PART	MONITORED VOLTAGES	INDEPENDENT OUTPUTS	RESET	WDI/WDO	MR	ADJUSTABLE $\overline{\text{RESET}}$ TIMEOUT
MAX16000	4	4	—	—	—	—
MAX16001	4	4	✓	WDI	✓	✓
MAX16002	4	—	✓	WDI	✓	✓
MAX16003	6	6	—	—	—	—
MAX16004	6	6	✓	WDI	✓	✓
MAX16005	6	—	✓	WDI/WDO	✓	✓
MAX16006	8	8	✓	WDI	✓	✓
MAX16007	8	—	✓	WDI	✓	✓

Revision History

REVISION NUMBER	REVISION DATE	DESCRIPTION	PAGES CHANGED
0	12/05	Initial release	—
1	1/06	Released MAX16003 and MAX16004.	20, 21
2	7/06	Released MAX16005. Updated *Pin Description* and *Detailed Description*.	1, 4, 7, 9, 10, 20, 21
3	12/08	Added the MAX16005 TSSOP package. Modified the *Detailed Description*, and added Figures 13, 14, and 15.	1, 2, 7, 8, 9, 10, 20–26
4	8/10	Revised the *Absolute Maximum Ratings* and the *Power-Supply Bypassing* sections.	2, 22
5	10/10	Added new graph to the *Typical Operating Characteristics*.	6
6	9/12	Added automotive qualified part to *Ordering Information*.	25
7	4/16	Updated *Pin Configuration* table	7, 8, 10
8	4/18	Added MAX16001ATE/V+ and MAX16001DTE/V+ information to the AEC-Q100 Qualified statement in the *Benefits and Features* section and the *Ordering Information*	1, 26
9	9/18	Updated *Typical Operating Characteristics*	6

For pricing, delivery, and ordering information, please visit Maxim Integrated's online storefront at https://www.maximintegrated.com/en/storefront/storefront.html.

Maxim Integrated cannot assume responsibility for use of any circuitry other than circuitry entirely embodied in a Maxim Integrated product. No circuit patent licenses are implied. Maxim Integrated reserves the right to change the circuitry and specifications without notice at any time. The parametric values (min and max limits) shown in the Electrical Characteristics table are guaranteed. Other parametric values quoted in this data sheet are provided for guidance.

Maxim Integrated and the Maxim Integrated logo are trademarks of Maxim Integrated Products, Inc. © 2018 Maxim Integrated Products, Inc.

Looking for pricing, stock, or lifecycle information?

Click below to explore more details on WIN SOURCE:

- View MAX16005DTE+ on WIN SOURCE
- Maxim Integrated Information

Optimize Your Supply Chain with WIN SOURCE Solutions

- Global Sourcing Solution
- Obsolete Management
- Cost Control Management
- Shortage Management
- Alternative Solution
- Excess Inventory Management