# THE DATASHEET OF

# MAX4583EEE+

www.win-source.net 0086-755-83957316

19-1328; Rev 6; 3/12

# Low-Voltage, CMOS Analog Multiplexers/Switches



## General Description

The MAX4581/MAX4582/MAX4583 are low-voltage, CMOS analog ICs configured as an 8-channel multiplexer (MAX4581), two 4-channel multiplexers (MAX4582), and three single-pole/double-throw (SPDT) switches (MAX4583).

These CMOS devices can operate continuously with ±2V to ±6V dual power supplies or a +2V to +12V single supply. Each switch can handle rail-to-rail analog signals. The off-leakage current is only 1nA at +25°C or 5nA at +85°C.

All digital inputs have 0.8V to 2.4V logic thresholds, ensuring TTL/CMOS-logic compatibility when using a single +5V or dual ±5V supplies.

## Applications

Battery-Operated Equipment

Audio and Video Signal Routing

Low-Voltage Data-Acquisition Systems

Communications Circuits

Automotive

## Features

- **MAX4582 Available in AEC-Q100 Qualified Version**
- **Offered in Automotive Temperature Range (-40°C to +125°C)**
- **Guaranteed On-Resistance**
  **80Ω with ±5V Supplies**
  **150Ω with Single +5V Supply**
- **Guaranteed On-Resistance Match Between Channels**
- **Guaranteed Low Off-Leakage Current 1nA at +25°C**
- **Guaranteed Low On-Leakage Current 1nA at +25°C**
- **+2V to +12V Single-Supply Operation ±2V to ±6V Dual-Supply Operation**
- **TTL/CMOS-Logic Compatible**
- **Low Distortion: < 0.02% (600Ω)**
- **Low Crosstalk: < -96dB (50Ω, MAX4582)**
- **High Off-Isolation: < -74dB (50Ω)**

## Ordering Information

| PART | TEMP RANGE | PIN-PACKAGE | TOP MARK |
|---|---|---|---|
| **MAX4581**CPE+ | 0°C to +70°C | 16 PDIP | — |
| MAX4581CSE+ | 0°C to +70°C | 16 Narrow SO | — |
| MAX4581CUE+ | 0°C to +70°C | 16 TSSOP | — |

*+Denotes a lead(Pb)-free/RoHS-compliant package.*

***Ordering Information continued at end of data sheet.***

## Pin Configurations/Functional Diagrams

TOP VIEW

MAXIM
MAX4581

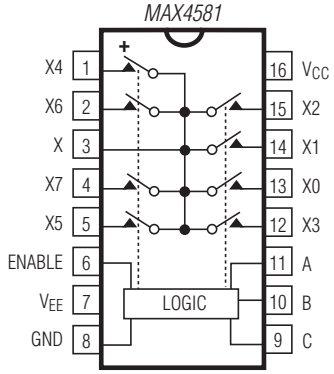


**PDIP/SO/QSOP/TSSOP**

MAXIM
MAX4582

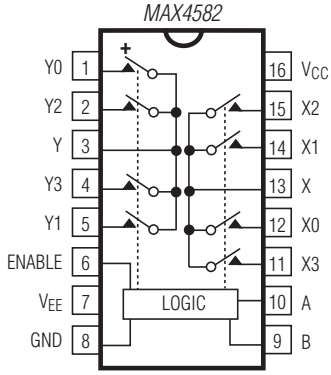


**PDIP/SO/QSOP/TSSOP**

MAXIM
MAX4583

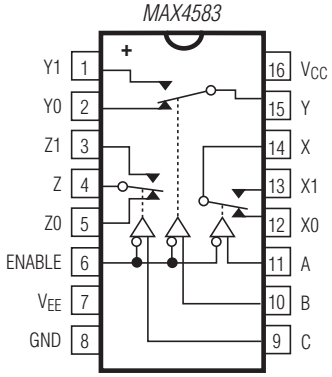


**PDIP/SO/QSOP/TSSOP**

*Pin Configurations continued at end of data sheet.*



***For pricing delivery, and ordering information please contact Maxim Direct! at 1-888-629-4642, or visit Maxim's website at www.maxim-ic.com.***

# Low-Voltage, CMOS Analog Multiplexers/Switches

## ABSOLUTE MAXIMUM RATINGS

Voltages Referenced to $V_{EE}$
$V_{CC}$ ..... -0.3V to 13V
Voltage into Any Terminal (Note 1) ... ($V_{EE}$ - 0.3V) to ($V_{CC}$ + 0.3V)
Continuous Current into Any Terminal ..... ±20mA
Peak Current, X_, Y_, Z_
(pulsed at 1ms, 10% duty cycle) ..... ±40mA
ESD per Method 3015.7 ..... >2000V
Continuous Power Dissipation ($T_A$ = +70°C)
16-Pin PDIP (derate 10.53mW/°C above +70°C) ..... 842mW
16-Pin Narrow SO (derate 8.70mW/°C above +70°C) ..... 696mW
16-Pin QSOP (derate 8.3mW/°C above +70°C) ..... 667mW
16-Pin TSSOP (derate 9.4mW/°C above +70°C) ..... 755mW
16-Pin TQFN (derate 14.7mW/°C above +70°C) ..... 1177mW
Operating Temperature Ranges
MAX458_C_ ..... 0°C to +70°C
MAX458_E_ ..... -40°C to +85°C
MAX458_A_ ..... -40°C to +125°C
Storage Temperature Range ..... -65°C to +150°C
Lead Temperature (soldering, 10s) ..... +300°C
Soldering Temperature (reflow) ..... +260°C

**Note 1:** Voltages exceeding $V_{CC}$ or $V_{EE}$ on any signal terminal are clamped by internal diodes. Limit forward-diode current to maximum current rating.

*Stresses beyond those listed under "Absolute Maximum Ratings" may cause permanent damage to the device. These are stress ratings only, and functional operation of the device at these or any other conditions beyond those indicated in the operational sections of the specifications is not implied. Exposure to absolute maximum rating conditions for extended periods may affect device reliability.*

## ELECTRICAL CHARACTERISTICS—Dual Supplies

($V_{CC}$ = 4.5V to 5.5V, $V_{EE}$ = -4.5V to -5.5V, $V_{_H}$ = 2.4V, $V_{_L}$ = 0.8V, $T_A$ = $T_{MIN}$ to $T_{MAX}$, unless otherwise noted. Typical values are at $T_A$ = +25°C.)

| PARAMETER | SYMBOL | CONDITIONS | | TEMP | MIN | TYP (Note 2) | MAX | UNITS |
|---|---|---|---|---|---|---|---|---|
| **ANALOG SWITCH** | | | | | | | | |
| Analog-Signal Range | $V_X$, $V_Y$, $V_Z$ | | | C, E, A | $V_{EE}$ | | $V_{CC}$ | V |
| Switch On-Resistance | $R_{ON}$ | $V_{CC}$ = 4.5V; $V_{EE}$ = -4.5V; $I_X$, $I_Y$, $I_Z$ = 1mA; $V_X$, $V_Y$, $V_Z$ = 3.5V | | +25°C | | 50 | 80 | Ω |
| | | | | C, E, A | | | 100 | |
| Switch On-Resistance Match Between Channels (Note 3) | $\Delta R_{ON}$ | $V_{CC}$ = 4.5V; $V_{EE}$ = -4.5V; $I_X$, $I_Y$, $I_Z$ = 1mA; $V_X$, $V_Y$, $V_Z$ = 3.5V | | +25°C | | 1 | 4 | Ω |
| | | | | C, E, A | | | 6 | |
| Switch On-Resistance Flatness (Note 4) | $R_{FLAT(ON)}$ | $V_{CC}$ = 5V; $V_{EE}$ = -5V; $I_X$, $I_Y$, $I_Z$ = 1mA; $V_X$, $V_Y$, $V_Z$ = 3V, 0V, -3V | | +25°C | | 4 | 10 | Ω |
| | | | | C, E, A | | | 12 | |
| X_, Y_, Z_ Off-Leakage (Note 5) | $I_{X_(OFF)}$, $I_{Y_(OFF)}$, $I_{Z_(OFF)}$ | $V_{CC}$ = 5.5V; $V_{EE}$ = -5.5V; $V_{X_}$, $V_{Y_}$, $V_{Z_}$ = ±4.5V; $V_X$, $V_Y$, $V_Z$ = ∓4.5V | | +25°C | -1 | | +1 | nA |
| | | | | C, E, A | -10 | | +10 | |
| X, Y, Z Off-Leakage (Note 5) | $I_{X(OFF)}$, $I_{Y(OFF)}$, $I_{Z(OFF)}$ | $V_{CC}$ = 5.5V; $V_{EE}$ = -5.5V; $V_{X_}$, $V_{Y_}$, $V_{Z_}$ = ±4.5V; $V_X$, $V_Y$, $V_Z$ = ∓4.5V | MAX4581 | +25°C | -2 | | +2 | nA |
| | | | | C, E, A | -100 | | +100 | |
| | | | MAX4582 MAX4583 | +25°C | -1 | | +1 | |
| | | | | C, E, A | -50 | | +50 | |
| X, Y, Z On-Leakage (Note 5) | $I_{X(ON)}$, $I_{Y(ON)}$, $I_{Z(ON)}$ | $V_{CC}$ = 5.5V; $V_{EE}$ = -5.5V; $V_X$, $V_Y$, $V_Z$ = ±4.5V | MAX4581 | +25°C | -2 | | +2 | nA |
| | | | | C, E, A | -100 | | +100 | |
| | | | MAX4582 MAX4583 | +25°C | -1 | | +1 | |
| | | | | C, E, A | -50 | | +50 | |
| **DIGITAL I/O** | | | | | | | | |
| Logic Input Logic Threshold High | $V_{AH}$, $V_{BH}$, $V_{CH}$ | | | C, E, A | | 1.5 | 2.4 | V |
| Logic Input Logic Threshold Low | $V_{AL}$, $V_{BL}$, $V_{CL}$ | | | C, E, A | 0.8 | 1.5 | | V |

## ELECTRICAL CHARACTERISTICS—Dual Supplies (continued)

($V_{CC}$ = 4.5V to 5.5V, $V_{EE}$ = -4.5V to -5.5V, $V_{_H}$ = 2.4V, $V_{_L}$ = 0.8V, $T_A$ = $T_{MIN}$ to $T_{MAX}$, unless otherwise noted. Typical values are at $T_A$ = +25°C.)

| PARAMETER | SYMBOL | CONDITIONS | | TEMP | MIN | TYP (Note 2) | MAX | UNITS |
|---|---|---|---|---|---|---|---|---|
| Input-Current High | $I_{AH}$, $I_{BH}$, $I_{CH}$ | $V_A$, $V_B$, $V_C$ = 2.4V | | C, E, A | -1 | | +1 | µA |
| Input-Current Low | $I_{AL}$, $I_{BL}$, $I_{CL}$ | $V_A$, $V_B$, $V_C$ = 0.8V | | C, E, A | -1 | | +1 | µA |
| **SWITCH DYNAMIC CHARACTERISTICS** | | | | | | | | |
| Inhibit Turn-On Time | $t_{(ON)}$ | $V_{X_}$, $V_{Y_}$, $V_{Z_}$ = 3V; $R_L$ = 300Ω; $C_L$ = 35pF; Figure 3 | | $T_A$ = +25°C | | 100 | 200 | ns |
| | | | | C, E, A | | | 200 | |
| Inhibit Turn-Off Time | $t_{(OFF)}$ | $V_{X_}$, $V_{Y_}$, $V_{Z_}$ = 3V; $R_L$ = 300Ω; $C_L$ = 35pF; Figure 3 | | $T_A$ = +25°C | | 40 | 100 | ns |
| | | | | C, E, A | | | 150 | |
| Address Transition Time | $t_{TRANS}$ | $V_{X_}$, $V_{Y_}$, $V_{Z_}$ = ±3V; $R_L$ = 300Ω; $C_L$ = 35pF; Figure 2 | | $T_A$ = +25°C | | 90 | 200 | ns |
| | | | | C, E, A | | | 200 | |
| Break-Before-Make Time | $t_{BBM}$ | $V_{X_}$, $V_{Y_}$, $V_{Z_}$ = 3V; $R_L$ = 300Ω; $C_L$ = 35pF; Figure 4 | | $T_A$ = +25°C | 4 | 20 | | ns |
| Charge Injection (Note 6) | Q | C = 1nF, $R_S$ = 0Ω, $V_S$ = 0V | | $T_A$ = +25°C | | 0.5 | 5 | pC |
| Input Off-Capacitance | $C_{X_(OFF)}$, $C_{Y_(OFF)}$, $C_{Z_(OFF)}$ | $V_{X_}$, $V_{Y_}$, $V_{Z_}$ = 0V; f = 1MHz; Figure 7 | | $T_A$ = +25°C | | 4 | | pF |
| Output Off-Capacitance | $C_{X(OFF)}$, $C_{Y(OFF)}$, $C_{Z(OFF)}$ | $V_{X_}$, $V_{Y_}$, $V_{Z_}$ = 0V; f = 1MHz; Figure 7 | MAX4581 | $T_A$ = +25°C | | 18 | | pF |
| | | | MAX4582 | | | 10 | | |
| | | | MAX4583 | | | 6 | | |
| Output On-Capacitance | $C_{X(ON)}$, $C_{Y(ON)}$, $C_{Z(ON)}$ | $V_{X_}$, $V_{Y_}$, $V_{Z_}$ = 0V; f = 1MHz; Figure 7 | MAX4581 | $T_A$ = +25°C | | 25 | | pF |
| | | | MAX4582 | | | 17 | | |
| | | | MAX4583 | | | 12.5 | | |
| Off-Isolation | $V_{ISO}$ | $R_L$ = 50Ω, f = 1MHz, Figure 6 | | $T_A$ = +25°C | | -74 | | dB |
| Channel-to-Channel Crosstalk | $V_{CT}$ | $R_L$ = 50Ω, f = 1MHz, Figure 6 | MAX4581 | $T_A$ = +25°C | | -78 | | dB |
| | | | MAX4582 | $T_A$ = +25°C | | -96 | | |
| | | | MAX4583 | $T_A$ = +25°C | | -73 | | pF |
| Total Harmonic Distortion | THD | $R_L$ = 600Ω, 5Vp-p, f = 20Hz to 20kHz | | $T_A$ = +25°C | | 0.02 | | % |
| **POWER SUPPLY** | | | | | | | | |
| Power-Supply Range | $V_{CC}$, $V_{EE}$ | | | C, E, A | ±2 | | ±6 | V |
| Power-Supply Current | $I_{CC}$, $I_{EE}$ | $V_{CC}$ = 5.5V, $V_{EE}$ = -5.5V, $V_A$, $V_B$, $V_C$, $V_{Enable}$ = V+ or 0V | | $T_A$ = +25°C | -1 | | +1 | µA |
| | | | | C, E, A | -10 | | +10 | |

# Low-Voltage, CMOS Analog Multiplexers/Switches

## ELECTRICAL CHARACTERISTICS—Single +5V Supply

($V_{CC}$ = 4.5V to 5.5V, $V_{EE}$ = 0V, $V_{_H}$ = 2.4V, $V_{_L}$ = 0.8V, $T_A$ = $T_{MIN}$ to $T_{MAX}$, unless otherwise noted. Typical values are at $T_A$ = +25°C.)

| PARAMETER | SYMBOL | CONDITIONS | | TEMP | MIN | TYP (Note 2) | MAX | UNITS |
|---|---|---|---|---|---|---|---|---|
| **ANALOG SWITCH** | | | | | | | | |
| Analog-Signal Range | $V_{X_}$, $V_{Y_}$, $V_{Z_}$, $V_X$, $V_Y$, $V_Z$ | | | C, E, A | $V_{EE}$ | | $V_{CC}$ | V |
| Switch On-Resistance | $R_{ON}$ | $V_{CC}$ = 4.5V; $I_X$, $I_Y$, $I_Z$ = 1mA; $V_X$, $V_Y$, $V_Z$ = 3.5V | | $T_A$ = +25°C | | 90 | 150 | Ω |
| | | | | C, E, A | | | 200 | |
| Switch On-Resistance Match Between Channels (Note 3) | $\Delta R_{ON}$ | $V_{CC}$ = 4.5V; $I_X$, $I_Y$, $I_Z$ = 1mA; $V_X$, $V_Y$, $V_Z$ = 3.5V | | $T_A$ = +25°C | | 2 | 8 | Ω |
| | | | | C, E, A | | | 10 | |
| X_, Y_, Z Off-Leakage (Note 5) | $I_{X_(OFF)}$, $I_{Y_(OFF)}$, $I_{Z_(OFF)}$ | $V_{CC}$ = 5.5V; $V_{X_}$, $V_{Y_}$, $V_{Z_}$ = 1V, 4.5V; $V_X$, $V_Y$, $V_Z$ = 4.5V, 1V | | $T_A$ = +25°C | -1 | | +1 | nA |
| | | | | C, E, A | -10 | | +10 | |
| X, Y, Z Off-Leakage (Note 5) | $I_{X(OFF)}$, $I_{Y(OFF)}$, $I_{Z(OFF)}$ | $V_{CC}$ = 5.5V; $V_{X_}$, $V_{Y_}$, $V_{Z_}$ = 1V, 4.5V; $V_X$, $V_Y$, $V_Z$ = 4.5V, 1V | MAX4581 | $T_A$ = +25°C | -2 | | +2 | nA |
| | | | | C, E, A | -100 | | +100 | |
| | | | MAX4582 MAX4583 | $T_A$ = +25°C | -1 | | +1 | |
| | | | | C, E, A | -50 | | +50 | |
| X, Y, Z On-Leakage (Note 5) | $I_{X(ON)}$, $I_{Y(ON)}$, $I_{Z(ON)}$ | $V_{CC}$ = 5.5V; $V_X$, $V_Y$, $V_Z$ = 4.5V, 1V | MAX4581 | $T_A$ = +25°C | -2 | | +2 | nA |
| | | | | C, E, A | -100 | | +100 | |
| | | | MAX4582 MAX4583 | $T_A$ = +25°C | -1 | | +1 | |
| | | | | C, E, A | -50 | | +50 | |
| **DIGITAL I/O** | | | | | | | | |
| Logic Input Logic Threshold High | $V_{AH}$, $V_{BH}$, $V_{CH}$, $V_{ENABLEH}$ | | | C, E, A | | 1.5 | 2.4 | V |
| Logic Input Logic Threshold Low | $V_{AL}$, $V_{BL}$, $V_{CL}$, $V_{ENABLEL}$ | | | C, E, A | 0.8 | 1.5 | | V |
| Input-Current High | $I_{AH}$, $I_{BH}$, $I_{CH}$, $I_{ENABLEH}$ | $V_{AL}$, $V_{BL}$, $V_{CL}$, $V_{EnableL}$ = 2.4V | | C, E, A | -1 | | +1 | µA |
| Input-Current Low | $I_{AL}$, $I_{BL}$, $I_{CL}$, $I_{ENABLEL}$ | $V_{AL}$, $V_{BL}$, $V_{CL}$, $V_{EnableL}$ = 0.8V | | C, E, A | -1 | | +1 | µA |
| **SWITCH DYNAMIC CHARACTERISTICS** | | | | | | | | |
| Charge Injection (Note 6) | Q | C = 1nF, $R_S$ = 0Ω, $V_S$ = 2.5V | | $T_A$ = +25°C | | 0.8 | 5 | pC |
| Enable Turn-On Time | $t_{(ON)}$ | $V_{X_}$, $V_{Y_}$, $V_{Z_}$ = 3V, $R_L$ = 300Ω, $C_L$ = 35pF, Figure 3 | | $T_A$ = +25°C | | 100 | 200 | ns |
| | | | | C, E, A | | | 250 | |
| Enable Turn-Off Time | $t_{(OFF)}$ | $V_{X_}$, $V_{Y_}$, $V_{Z_}$ = 3V, $R_L$ = 300Ω, $C_L$ = 35pF, Figure 3 | | $T_A$ = +25°C | | 40 | 100 | ns |
| | | | | C, E, A | | | 150 | |
| Address Transition Time | $t_{TRANS}$ | $V_{X_}$, $V_{Y_}$, $V_{Z_}$ = 3V/0V, $R_L$ = 300Ω, $C_L$ = 35pF, Figure 2 | | $T_A$ = +25°C | | 80 | 200 | ns |
| | | | | C, E, A | | | 250 | |
| Break-Before-Make Time | $t_{BBM}$ | $V_{X_}$, $V_{Y_}$, $V_{Z_}$ = 3V, $R_L$ = 300Ω, $C_L$ = 35pF, Figure 4 | | $T_A$ = +25°C | 10 | 30 | | ns |
| **POWER SUPPLY** | | | | | | | | |
| Power-Supply Range | $V_{CC}$, $V_{EE}$ | | | C, E, A | 2 | | 12 | V |
| Power-Supply Current | $I_{CC}$, $I_{EE}$ | $V_{CC}$ = 3.6V; $V_A$, $V_B$, $V_C$, $V_{Enable}$ = V+ or 0V | | $T_A$ = +25°C | -1 | | +1 | µA |
| | | | | C, E, A | -10 | | +10 | |

## ELECTRICAL CHARACTERISTICS—Single +3V Supply

($V_{CC}$ = 2.7V to 3.6V, $V_{EE}$ = 0V, $V_{_H}$ = 2.0V, $V_{_L}$ = 0.5V, $T_A$ = $T_{MIN}$ to $T_{MAX}$, unless otherwise noted. Typical values are at $T_A$ = +25°C.)

| PARAMETER | SYMBOL | CONDITIONS | | TEMP | MIN | TYP (Note 2) | MAX | UNITS |
|---|---|---|---|---|---|---|---|---|
| **ANALOG SWITCH** | | | | | | | | |
| Analog-Signal Range | $V_{X_}$, $V_{Y_}$, $V_{Z_}$, $V_X$, $V_Y$, $V_Z$ | | | C, E, A | $V_{EE}$ | | $V_{CC}$ | V |
| Switch On-Resistance | $R_{ON}$ | $V_{CC}$ = 2.7V; $I_X$, $I_Y$, $I_Z$ = 0.1mA; $V_X$, $V_Y$, $V_Z$ = 1.5V | | $T_A$ = +25°C | | 190 | 450 | Ω |
| | | | | C, E, A | | | 550 | |
| X_, Y_, Z_ Off-Leakage (Note 5) | $I_{X_(OFF)}$, $I_{Y_(OFF)}$, $I_{Z_(OFF)}$ | $V_{CC}$ = 3.6V; $V_{X_}$, $V_{Y_}$, $V_{Z_}$ = 1V, 3V; $V_X$, $V_Y$, $V_Z$ = 3V, 1V | | $T_A$ = +25°C | -1 | | +1 | nA |
| | | | | C, E, A | -10 | | +10 | |
| X, Y, Z Off-Leakage (Note 6) | $I_{X(OFF)}$, $I_{Y(OFF)}$, $I_{Z(OFF)}$ | $V_{CC}$ = 3.6V; $V_{X_}$, $V_{Y_}$, $V_{Z_}$ = 1V, 3.0V; $V_X$, $V_Y$, $V_Z$ = 3.0V, 1V | MAX4581 | $T_A$ = +25°C | -2 | | +2 | nA |
| | | | | C, E, A | -100 | | +100 | |
| | | | MAX4582 MAX4583 | $T_A$ = +25°C | -1 | | +1 | |
| | | | | C, E, A | -50 | | +50 | |
| X, Y, Z On-Leakage (Note 6) | $I_{X(ON)}$, $I_{Y(ON)}$, $I_{Z(ON)}$ | $V_{CC}$ = 3.6V; $V_X$, $V_Y$, $V_Z$ = 3.0V, 1V | MAX4581 | $T_A$ = +25°C | -2 | | +2 | nA |
| | | | | C, E, A | -100 | | +100 | |
| | | | MAX4582 MAX4583 | $T_A$ = +25°C | -1 | | +1 | |
| | | | | C, E, A | -50 | | +50 | |
| **DIGITAL I/O** | | | | | | | | |
| Logic Input Logic Threshold High | $V_{AH}$, $V_{BH}$, $V_{CH}$, $V_{ENABLEH}$ | | | C, E, A | | 1.0 | 2.0 | V |
| Logic Input Logic Threshold Low | $V_{AL}$, $V_{BL}$, $V_{CL}$, $V_{ENABLEL}$ | | | C, E, A | 0.5 | 1.0 | | V |
| Input-Current High | $I_{AH}$, $I_{BH}$, $I_{CH}$, $I_{ENABLEH}$ | $V_A$, $V_B$, $V_C$ = $V_{Enable}$ = 2.0V | | C, E, A | -1 | | +1 | µA |
| Input-Current Low | $I_{AL}$, $I_{BL}$, $I_{CL}$, $I_{ENABLEL}$ | $V_A$, $V_B$, $V_C$ = $V_{Enable}$ = 0.5V | | C, E, A | -1 | | +1 | µA |
| **SWITCH DYNAMIC CHARACTERISTICS** (Note 6) | | | | | | | | |
| Enable Turn-On Time | $t_{(ON)}$ | $V_{X_}$, $V_{Y_}$, $V_{Z_}$ = 1.5V; $R_L$ = 300Ω; $C_L$ = 35pF; Figure 3 | | $T_A$ = +25°C | | 170 | 300 | ns |
| | | | | C, E, A | | | 400 | |
| Enable Turn-Off Time | $t_{(OFF)}$ | $V_{X_}$, $V_{Y_}$, $V_{Z_}$ = 1.5V; $R_L$ = 300Ω; $C_L$ = 35pF; Figure 3 | | $T_A$ = +25°C | | 50 | 200 | ns |
| | | | | C, E, A | | | 300 | |
| Address Transition Time | $t_{TRANS}$ | $V_{X_}$, $V_{Y_}$, $V_{Z_}$ = 1.5V/0V; $R_L$ = 300Ω; $C_L$ = 35pF; Figure 2 | | $T_A$ = +25°C | | 130 | 300 | ns |
| | | | | C, E, A | | | 400 | |
| Break-Before-Make Time | $t_{BBM}$ | $V_{X_}$, $V_{Y_}$, $V_{Z_}$ = 1.5V; $R_L$ = 300Ω; $C_L$ = 35pF | | $T_A$ = +25°C | 15 | 40 | | ns |
| **POWER SUPPLY** | | | | | | | | |
| Power-Supply Current | $I_{CC}$, $I_{EE}$ | $V_{CC}$ = 3.6V, $V_A$, $V_B$, $V_C$, $V_{Enable}$ = V+ or 0V | | $T_A$ = +25°C | -1 | | +1 | µA |
| | | | | C, E, A | -10 | | +10 | |

**Note 2:** The algebraic convention is used in this data sheet; the most negative value is shown in the minimum column.

**Note 3:** $\Delta R_{ON} = R_{ON(MAX)} - R_{ON(MIN)}$.

**Note 4:** Flatness is defined as the difference between the maximum and minimum value of on-resistance as measured over the specified analog signal ranges; i.e., $V_{X_}$, $V_{Y_}$, $V_{Z_}$ = 3V to 0 and 0 to -3V.

**Note 5:** Leakage parameters are 100% tested at maximum-rated hot operating temperature, and guaranteed by correlation at $T_A$ = +25°C.

**Note 6:** Guaranteed by design, not production tested.

# Low-Voltage, CMOS Analog Multiplexers/Switches

## Typical Operating Characteristics

($V_{CC}$ = 5V, $V_{EE}$ = -5V, $V_{GND}$ = 0V, $T_A$ = +25°C, unless otherwise noted.)

**ON-RESISTANCE vs. $V_X$, $V_Y$, $V_Z$ (DUAL SUPPLIES)**

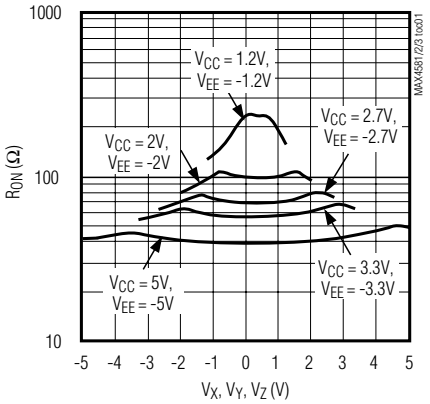


**ON-RESISTANCE vs. $V_X$, $V_Y$, $V_Z$ AND TEMPERATURE (DUAL SUPPLIES)**

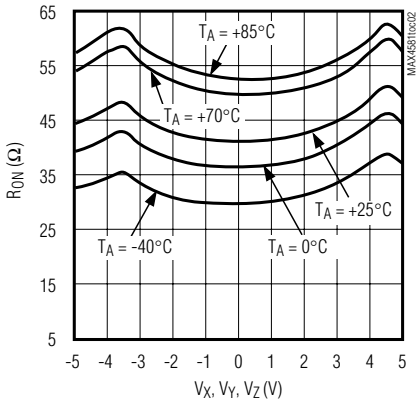


**ON-RESISTANCE vs. $V_X$, $V_Y$, $V_Z$ (SINGLE SUPPLY)**

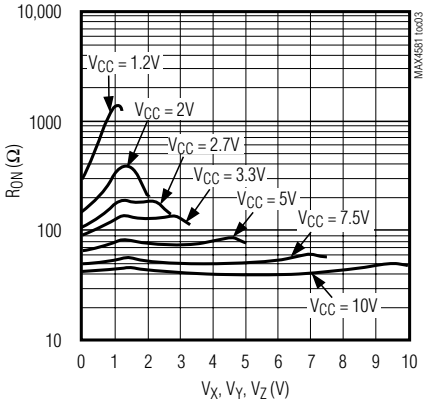


**ON-RESISTANCE vs. $V_X$, $V_Y$, $V_Z$ AND TEMPERATURE (SINGLE SUPPLY)**

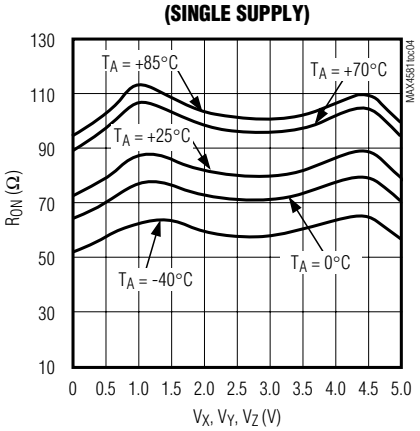


**OFF-LEAKAGE vs. TEMPERATURE**

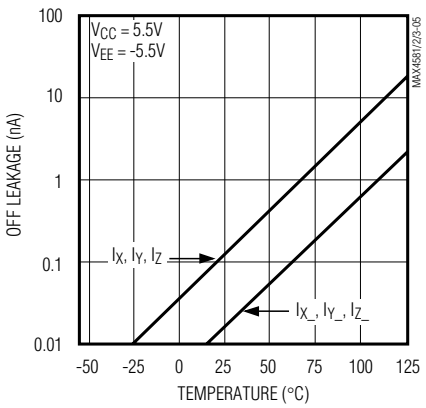


**ON-LEAKAGE vs. TEMPERATURE**

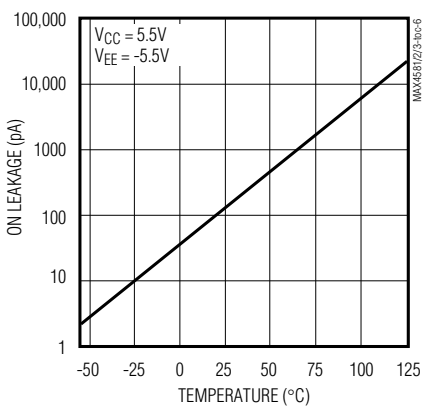


**CHARGE INJECTION vs. $V_X$, $V_Y$, $V_Z$**

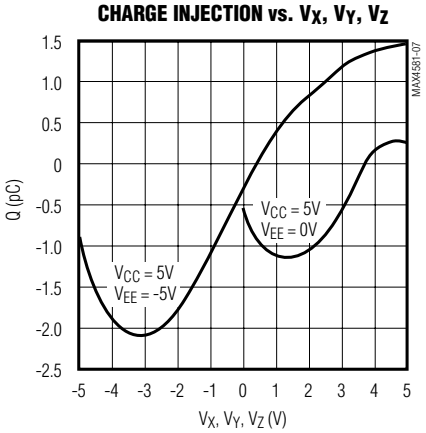

## Typical Operating Characteristics (continued)

($V_{CC}$ = 5V, $V_{EE}$ = -5V, $V_{GND}$ = 0V, $T_A$ = +25°C, unless otherwise noted.)

**SUPPLY CURRENT vs. TEMPERATURE**

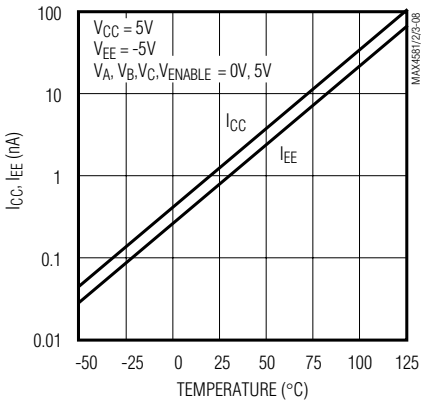


**FREQUENCY RESPONSE**

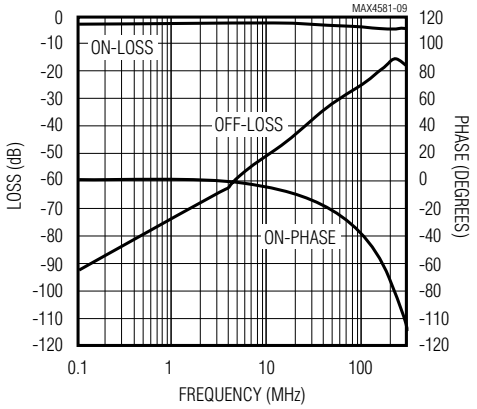


**TOTAL HARMONIC DISTORTION vs. FREQUENCY**

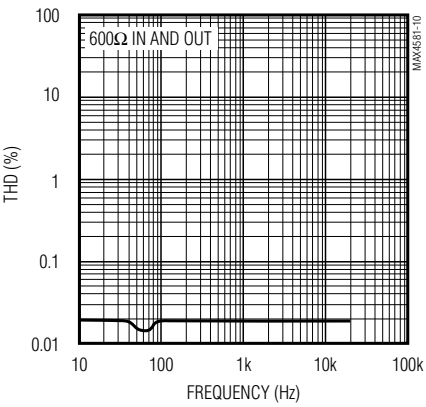


**VCC CURRENT vs. LOGIC LEVEL (VA, VB, VC, VENABLE)**

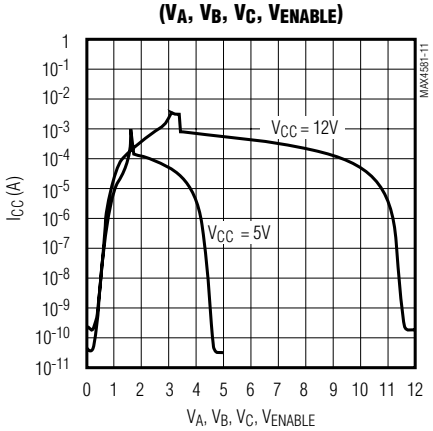


**LOGIC-LEVEL THRESHOLD vs. VCC**

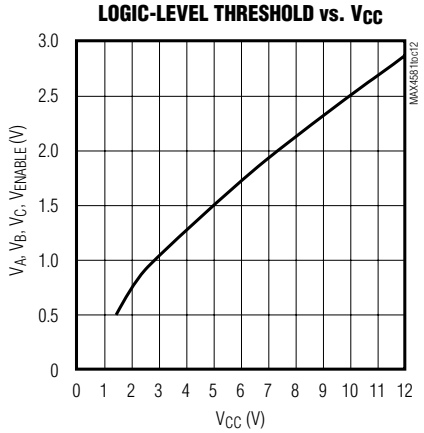

# Low-Voltage, CMOS Analog Multiplexers/Switches

## Pin Description

| PIN | | | | | | NAME | FUNCTION |
|---|---|---|---|---|---|---|---|
| MAX4581 | | MAX4582 | | MAX4583 | | | |
| PDIP, SO, TSSOP | TQFN-EP | PDIP, SO, TSSOP | TQFN-EP | PDIP, SO, TSSOP | TQFN-EP | | |
| 13, 14, 15, 12, 1, 5, 2, 4 | 11, 12, 13, 10, 15, 3, 16, 2 | — | — | — | — | X0–X7 | Analog Switch Inputs 0–7 |
| 3 | 1 | 13 | 11 | 14 | 12 | X | Analog Switch “X” Output |
| — | — | 12, 14, 15, 11 | 10, 12, 13, 9 | — | — | X0, X1, X2, X3 | Analog Switch “X” Inputs 0–3 |
| — | — | 1, 5, 2, 4 | 15, 3, 16, 2 | — | — | Y0, Y1, Y2, Y3 | Analog Switch “Y” Inputs 0–3 |
| — | — | 3 | 1 | 15 | 13 | Y | Analog Switch “Y” Output |
| — | — | — | — | 13 | 11 | X1 | Analog Switch “X” Normally Open Input |
| — | — | — | — | 12 | 10 | X0 | Analog Switch “X” Normally Closed Input |
| — | — | — | — | 1 | 15 | Y1 | Analog Switch “Y” Normally Open Input |
| — | — | — | — | 2 | 16 | Y0 | Analog Switch “Y” Normally Open Input |
| — | — | — | — | 3 | 1 | Z1 | Analog Switch “Z” Normally Open Input |
| — | — | — | — | 5 | 3 | Z0 | Analog Switch “Z” Normally Open Input |
| — | — | — | — | 4 | 2 | Z | Analog Switch “Z” Output |
| 16 | 14 | 16 | 14 | 16 | 14 | $V_{CC}$ | Positive Analog and Digital Supply-Voltage Input |
| 11 | 9 | 10 | 8 | 11 | 9 | A | Digital Address “A” Input |
| 10 | 8 | 9 | 7 | 10 | 8 | B | Digital Address “B” Input |
| 9 | 7 | — | — | 9 | 7 | C | Digital Address “C” Input |
| 8 | 6 | 8 | 6 | 8 | 6 | GND | Ground. Connect to digital ground. (Analog signals have no ground reference; they are limited to $V_{CC}$ and $V_{EE}$.) |
| 7 | 5 | 7 | 5 | 7 | 5 | $V_{EE}$ | Negative Analog Supply-Voltage Input. Connect to GND for single-supply operation. |
| 6 | 4 | 6 | 4 | 6 | 4 | ENABLE | Digital Enable Input. Normally connected to GND. |
| — | — | — | — | — | — | EP | Exposed Pad (TQFN only). Connect EP to $V_{CC}$. |

***Note:*** *Input and output pins are identical and interchangeable. Any may be considered an input or output; signals pass equally well in both directions.*

## Applications Information

### Power-Supply Considerations

#### Overview

The MAX4581/MAX4582/MAX4583 construction is typical of most CMOS analog switches. They have three supply pins: $V_{CC}$, $V_{EE}$, and GND. $V_{CC}$ and $V_{EE}$ are used to drive the internal CMOS switches and set the limits of the analog voltage on any switch. Reverse ESD-protection diodes are internally connected between each analog-signal pin and both $V_{CC}$ and $V_{EE}$. If any analog signal exceeds $V_{CC}$ or $V_{EE}$, one of these diodes

## Table 1. Truth Table/Switch Programming

| ENABLE INPUT | SELECT INPUTS | | | ON SWITCHES | | |
|---|---|---|---|---|---|---|
| | C* | B | A | MAX4581 | MAX4582 | MAX4583 |
| H | X | X | X | All switches open | All switches open | All switches open |
| L | L | L | L | X–X0 | X–X0, Y–Y0 | X–X0, Y–Y0, Z–Z0 |
| L | L | L | H | X–X1 | X–X1, Y–Y1 | X–X1, Y–Y0, Z–Z0 |
| L | L | H | L | X–X2 | X–X2, Y–Y2 | X–X0, Y–Y1, Z–Z0 |
| L | L | H | H | X–X3 | X–X3, Y–Y3 | X–X1, Y–Y1, Z–Z0 |
| L | H | L | L | X–X4 | X–X0, Y–Y0 | X–X0, Y–Y0, Z–Z1 |
| L | H | L | H | X–X5 | X–X1, Y–Y1 | X–X1, Y–Y0, Z–Z1 |
| L | H | H | L | X–X6 | X–X2, Y–Y2 | X–X0, Y–Y1, Z–Z1 |
| L | H | H | H | X–X7 | X–X3, Y–Y3 | X–X1, Y–Y1, Z–Z1 |

*X = Don't care*

**C not present on MAX4582.*

***Note:*** *Input and output pins are identical and interchangeable. Either may be considered an input or output; signals pass equally well in either direction.*

will conduct. During normal operation, these and other reverse-biased ESD diodes leak, forming the only current drawn from $V_{CC}$ or $V_{EE}$.

Virtually all the analog leakage current comes from the ESD diodes. Although the ESD diodes on a given signal pin are identical and therefore fairly well balanced, they are reverse biased differently. Each is biased by either $V_{CC}$ or $V_{EE}$ and the analog signal. This means their leakages will vary as the signal varies. The *difference* in the two diode leakages to the $V_{CC}$ and $V_{EE}$ pins constitutes the analog-signal-path leakage current. All analog leakage current flows between each pin and one of the supply terminals, not to the other switch terminal. This is why both sides of a given switch can show leakage currents of either the same or opposite polarity.

There is no connection between the analog-signal paths and GND.

$V_{CC}$ and GND power the internal logic and logic-level translators, and set the input logic limits. The logic-level translators convert the logic levels into switched $V_{CC}$ and $V_{EE}$ signals to drive the gates of the analog signals. This drive signal is the only connection between the logic supplies and signals and the analog supplies. $V_{CC}$ and $V_{EE}$ have ESD-protection diodes to GND.

The logic-level thresholds are TTL/CMOS compatible when $V_{CC}$ is +5V. As $V_{CC}$ rises, the threshold increases

slightly, so when $V_{CC}$ reaches +12V the threshold is about 3.1V (above the TTL-guaranteed high-level minimum of 2.8V, but still compatible with CMOS outputs).

### Bipolar Supplies

These devices operate with bipolar supplies between ±2V and ±5V. The $V_{CC}$ and $V_{EE}$ supplies need not be symmetrical, but their sum cannot exceed the +13V absolute maximum rating

### Single Supply

These devices operate from a single supply between +2V and +12V when $V_{EE}$ is connected to GND. All of the bipolar precautions must be observed. At room temperature, they actually "work" with a single supply near or below +1.7V, although as supply voltage decreases, switch on-resistance and switching times become very high.

### Overvoltage Protection

Proper power-supply sequencing is recommended for all CMOS devices. Do not exceed the absolute maximum ratings because stresses beyond the listed ratings can cause permanent damage to the devices. Always sequence $V_{CC}$ on first, then $V_{EE}$, followed by the logic inputs and analog signals. If power-supply sequencing is not possible, add two small signal diodes (D1, D2) in series with the supply pins for overvoltage protection (Figure 1).

Adding diodes reduces the analog-signal range to one diode drop below $V_{CC}$ and one diode drop above $V_{EE}$, but does not affect the devices' low switch resistance and low leakage characteristics. Device operation is unchanged, and the difference between $V_{CC}$ and $V_{EE}$ should not exceed 13V. These protection diodes are not recommended when using a single supply if signal levels must extend to ground.

### High-Frequency Performance

In 50Ω systems, signal response is reasonably flat up to 50MHz (see *Typical Operating Characteristics*). Above 20MHz, the on response has several minor peaks which are highly layout dependent. The problem is not turning the switch on, but turning it off. The off-state switch acts like a capacitor and passes higher frequencies with less attenuation. At 10MHz, off isolation is about -50dB in 50Ω systems, becoming worse (approximately 20dB per decade) as frequency increases. Higher circuit impedances also degrade off isolation. Adjacent channel attenuation is about 3dB above that of a bare IC socket and is entirely due to capacitive coupling.

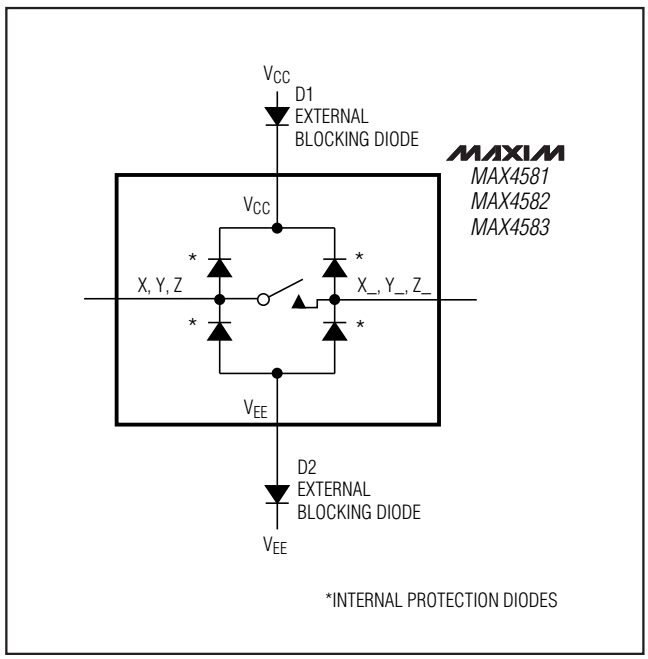


*Figure 1. Overvoltage Protection Using External Blocking Diodes*

### Pin Nomenclature

The MAX4581/MAX4582/MAX4583 are pin-compatible with the industry-standard 74HC4051/74HC4052/74HC4053 and the MAX4051/MAX4052/MAX4053. They function identically and have identical logic diagrams, although these parts differ electrically.

The pin designations and logic diagrams in this data sheet conform to the original 1972 specifications published by RCA for the CD4051/CD4052/CD4053. These designations differ from the standard Maxim switch and mux designations as found all other Maxim data sheets (including the MAX4051/MAX4052/MAX4053) and may cause confusion. Designers who feel more comfortable with Maxim's standard designations are advised that the pin designations and logic diagrams on the MAX4051/MAX4052/MAX4053 data sheet may be freely applied to the MAX4581/MAX4582/MAX4583.

## Test Circuits/Timing Diagrams

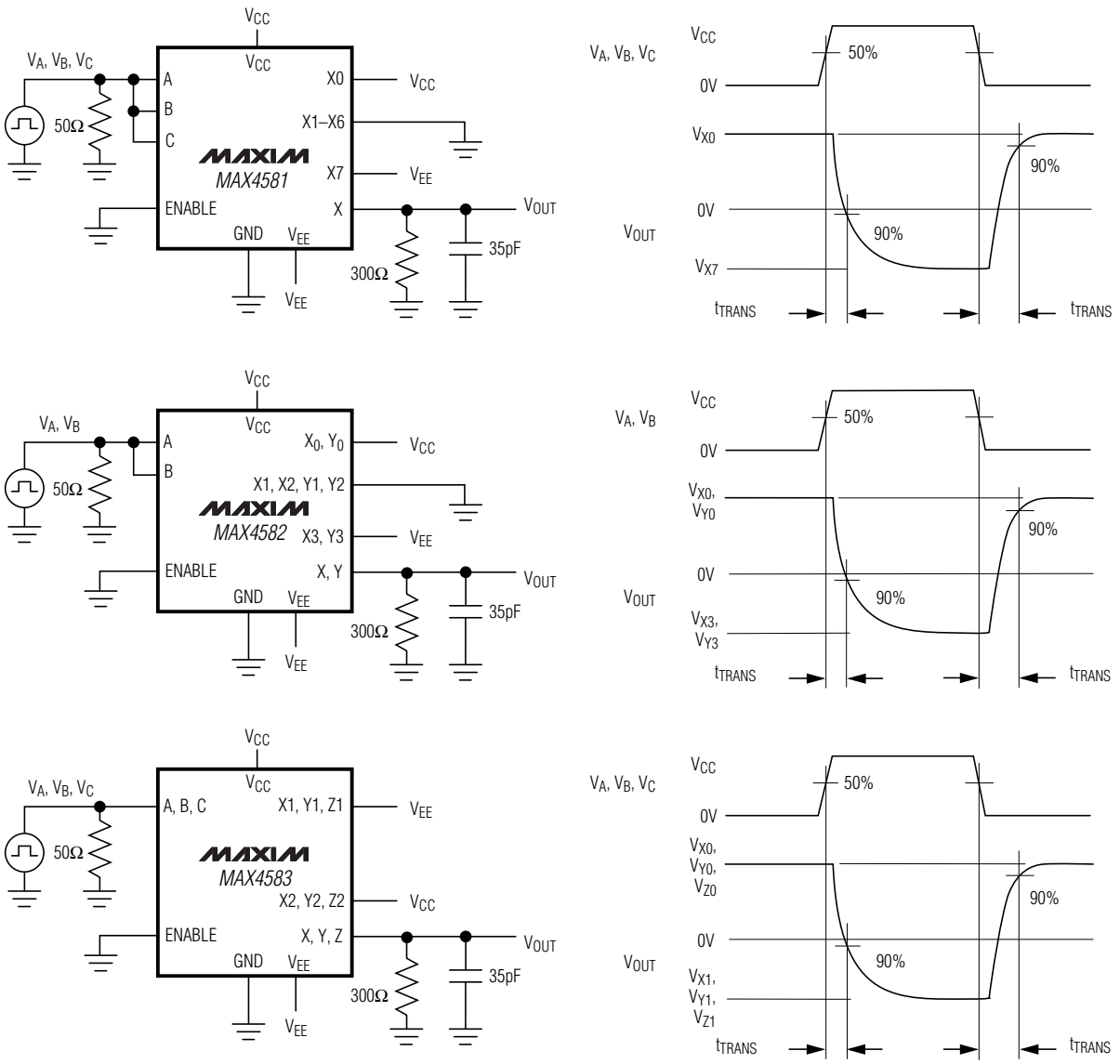


VEE = 0V FOR SINGLE-SUPPLY OPERATION.
TEST EACH SECTION INDIVIDUALLY.

*Figure 2. Address Transition Times*

# Low-Voltage, CMOS Analog Multiplexers/Switches

## Test Circuits/Timing Diagrams (continued)

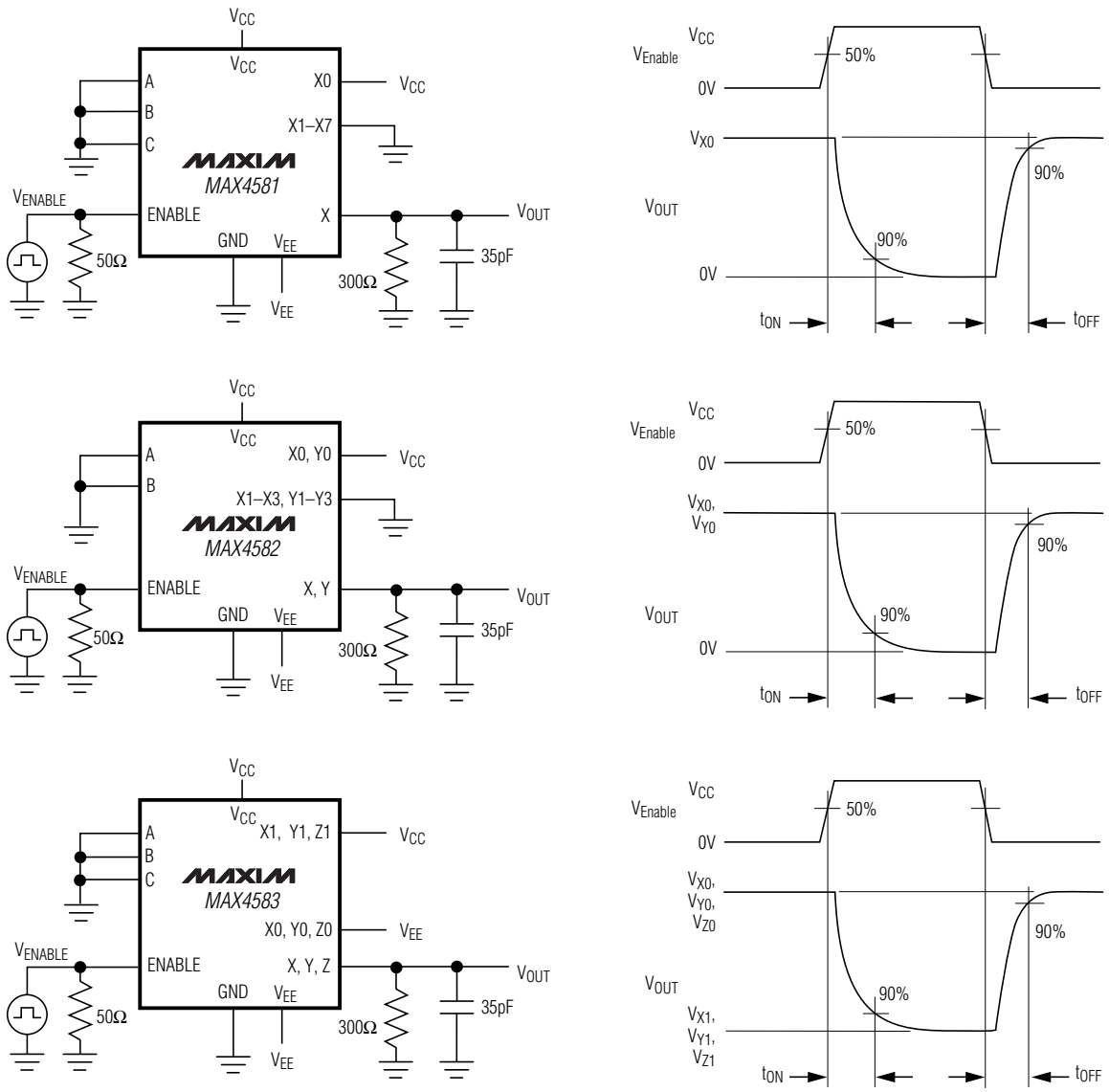


VEE = 0V FOR SINGLE-SUPPLY OPERATION.
TEST EACH SECTION INDIVIDUALLY.

*Figure 3. Inhibit Switching Times*

## Test Circuits/Timing Diagrams (continued)

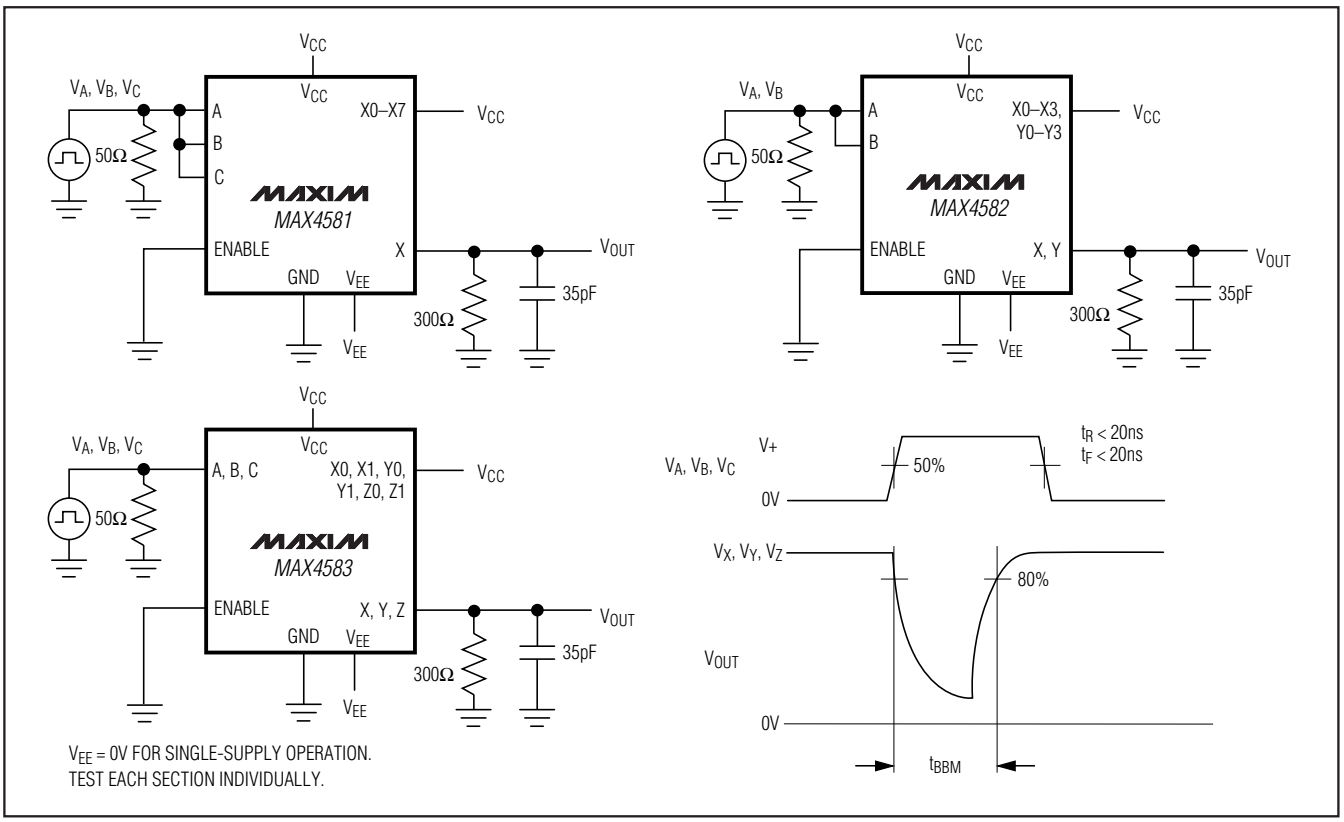


*Figure 4. Break-Before-Make Interval*

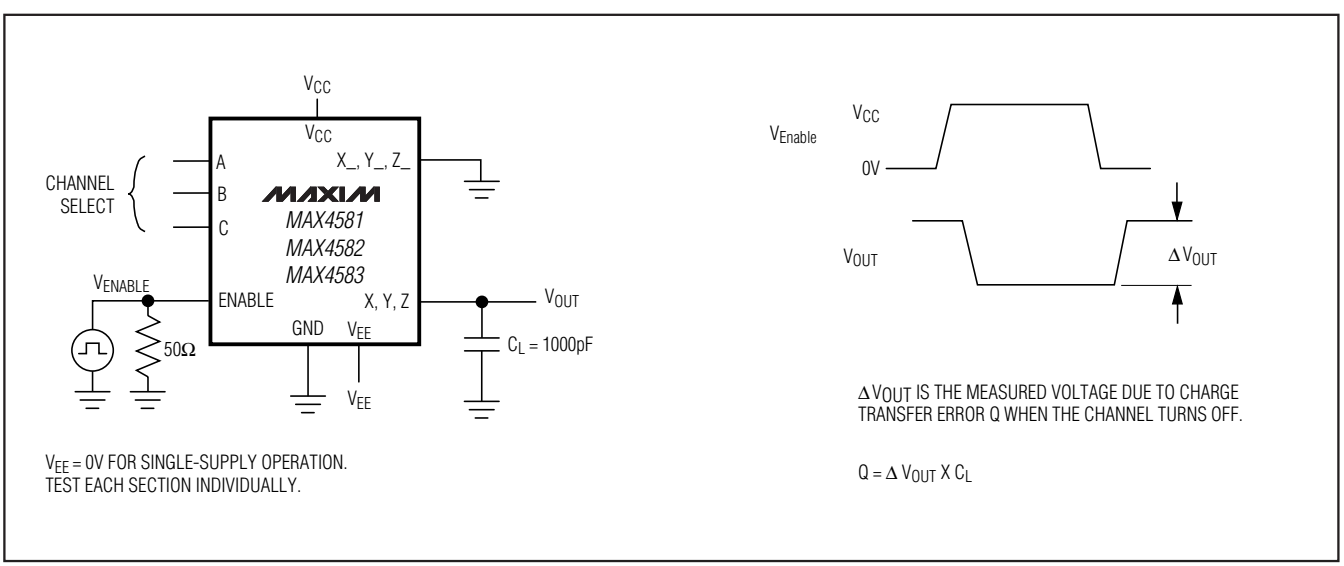


*Figure 5. Charge Injection*

# Low-Voltage, CMOS Analog Multiplexers/Switches

## Test Circuits/Timing Diagrams (continued)

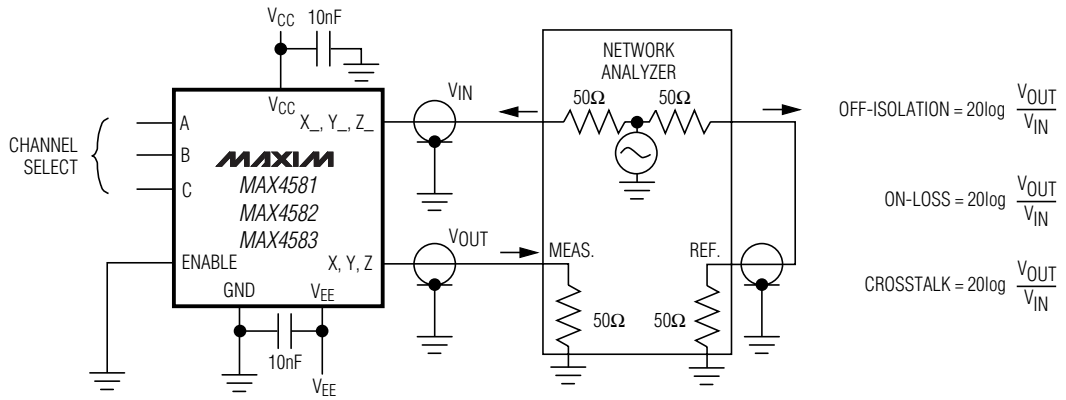


MEASUREMENTS ARE STANDARDIZED AGAINST SHORT AT SOCKET TERMINALS.
OFF-ISOLATION IS MEASURED BETWEEN COM AND "OFF" NO TERMINAL ON EACH SWITCH.
ON-LOSS IS MEASURED BETWEEN COM AND "ON" NO TERMINAL ON EACH SWITCH.
CROSSTALK (MAX4582/MAX4583) IS MEASURED FROM ONE CHANNEL (A, B, C) TO ALL OTHER CHANNELS.
SIGNAL DIRECTION THROUGH SWITCH IS REVERSED; WORST VALUES ARE RECORDED.

*Figure 6. Off Isolation, On Loss, and Crosstalk*

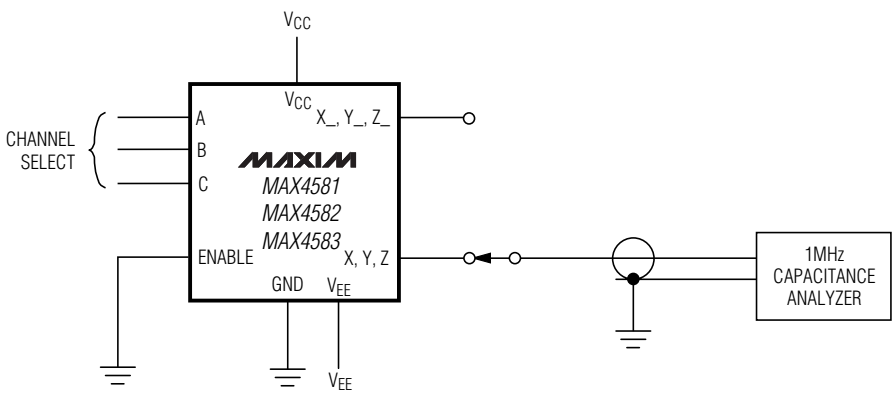


*Figure 7. Capacitance*

## Pin Configurations/Functional Diagrams (continued)

BOTTOM VIEW

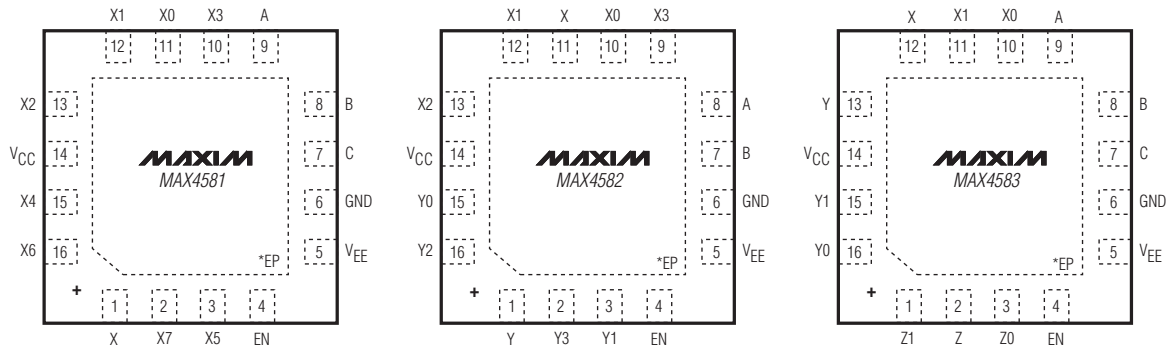


*CONNECT EXPOSED PAD TO $V_{CC}$

## Ordering Information (continued)

| PART | TEMP RANGE | PIN-PACKAGE | TOP MARK |
|---|---|---|---|
| MAX4581CEE+ | 0°C to +70°C | 16 QSOP | — |
| MAX4581EPE+ | -40°C to +85°C | 16 PDIP | — |
| MAX4581ESE+ | -40°C to +85°C | 16 Narrow SO | — |
| MAX4581EUE+ | -40°C to +85°C | 16 TSSOP | — |
| MAX4581EEE+ | -40°C to +85°C | 16 QSOP | — |
| MAX4581ETE+ | -40°C to +85°C | 16 TQFN-EP* | AGH |
| MAX4581ASE+ | -40°C to +125°C | 16 Narrow SO | — |
| MAX4581AUE+ | -40°C to +125°C | 16 TSSOP | — |
| **MAX4582**CPE+ | 0°C to +70°C | 16 PDIP | — |
| MAX4582CSE+ | 0°C to +70°C | 16 Narrow SO | — |
| MAX4582CUE+ | 0°C to +70°C | 16 TSSOP | — |
| MAX4582CEE+ | 0°C to +70°C | 16 QSOP | — |
| MAX4582EPE+ | -40°C to +85°C | 16 PDIP | — |
| MAX4582ESE+ | -40°C to +85°C | 16 Narrow SO | — |
| MAX4582EUE+ | -40°C to +85°C | 16 TSSOP | — |

| PART | TEMP RANGE | PIN-PACKAGE | TOP MARK |
|---|---|---|---|
| MAX4582EEE+ | -40°C to +85°C | 16 QSOP | — |
| MAX4582ETE+ | -40°C to +85°C | 16 TQFN-EP* | AGH |
| MAX4582ASE+ | -40°C to +125°C | 16 Narrow SO | — |
| MAX4582AUE/V+T | -40°C to +125°C | 16 TSSOP | — |
| **MAX4583**CPE+ | 0°C to +70°C | 16 PDIP | — |
| MAX4583CSE+ | 0°C to +70°C | 16 Narrow SO | — |
| MAX4583CUE+ | 0°C to +70°C | 16 TSSOP | — |
| MAX4583CEE+ | 0°C to +70°C | 16 QSOP | — |
| MAX4583EPE+ | -40°C to +85°C | 16 PDIP | — |
| MAX4583ESE+ | -40°C to +85°C | 16 Narrow SO | — |
| MAX4583EUE+ | -40°C to +85°C | 16 TSSOP | — |
| MAX4583EEE+ | -40°C to +85°C | 16 QSOP | — |
| MAX4583ETE+ | -40°C to +85°C | 16 TQFN–EP* | AGH |
| MAX4583ASE+ | -40°C to +125°C | 16 Narrow SO | — |
| MAX4583AUE+ | -40°C to +125°C | 16 TSSOP | — |

*+Denotes a lead(Pb)-free/RoHS-compliant package.*

*/V Denotes an automotive qualified part.*

*T = Tape and reel.*

**EP = Exposed pad.*

# Low-Voltage, CMOS Analog Multiplexers/Switches

## Chip Information

PROCESS: BICMOS

TRANSISTOR COUNT: 219

## Package Information

For the latest package outline information and land patterns (footprints), go to **www.maxim-ic.com/packages**. Note that a "+", "#", or "-" in the package code indicates RoHS status only. Package drawings may show a different suffix character, but the drawing pertains to the package regardless of RoHS status.

| PACKAGE TYPE | PACKAGE CODE | OUTLINE NO. | LAND PATTERN NO. |
|---|---|---|---|
| 16 PDIP | P16+1 | 21-0043 | — |
| 16 Narrow SO | S16+1 | 21-0041 | 90-0097 |
| 16 TSSOP | U16+2 | 21-0066 | 90-0117 |
| 16 QSOP | E16+4 | 21-0055 | 90-0167 |
| 16 TQFN | T1633+5 | 21-0136 | 90-0032 |

## Revision History

| REVISION NUMBER | REVISION DATE | DESCRIPTION | PAGES CHANGED |
|---|---|---|---|
| 5 | 6/07 | Various changes | — |
| 6 | 3/12 | Updated TQFN, PDIP, and lead-free packaging options; updated temperature ranges | 1–7, 15, 16 |

*Maxim cannot assume responsibility for use of any circuitry other than circuitry entirely embodied in a Maxim product. No circuit patent licenses are implied. Maxim reserves the right to change the circuitry and specifications without notice at any time. The parametric values (min and max limits) shown in the Electrical Characteristics table are guaranteed. Other parametric values quoted in this data sheet are provided for guidance.*



© 2012 Maxim Integrated Products Maxim is a registered trademark of Maxim Integrated Products, Inc.

## Looking for pricing, stock, or lifecycle information?

Click below to explore more details on WIN SOURCE:

- View MAX4583EEE+ on WIN SOURCE
- Maxim Integrated Information

## Optimize Your Supply Chain with WIN SOURCE Solutions

- Global Sourcing Solution
- Obsolete Management
- Cost Control Management
- Shortage Management
- Alternative Solution
- Excess Inventory Management