WINSOURCE ELECTRONICS

THE DATASHEET OF

MAX4586EUB-T

www.win-source.net 0086-755-83957316

19-1511; Rev 0; 8/99

MAXIM

Serially Controlled, 4-Channel Audio/Video Multiplexers

General Description

The MAX4586/MAX4587 serial-interface, programmable, 4-to-1 channel multiplexers are ideal for multimedia applications. They feature 65Ω on-resistance, 4Ω on-resistance matching between channels, and 5Ω on-resistance flatness. Additionally, they feature -83dB off-isolation at 20kHz and -48dB off-isolation at 10MHz, with -84dB crosstalk at 20kHz and -60dB crosstalk at 10MHz.

The MAX4586 uses a 2-wire, I²C™-compatible serial interface; the MAX4587 uses a 3-wire, SPI™/QSPI™/MICROWIRE™-compatible interface. Both devices are available in 10-pin µMAX packages and are specified for the extended -40°C to +85°C temperature range.

Features

- **+2.7V to +5.5V Single-Supply Operation**
- **4-to-1 Channel Multiplexer**
- **65Ω (max) R_{ON} with +5V Supply**
- **Audio Performance**
  - **-83dB Off-Isolation at 20kHz**
  - **-84dB Crosstalk at 20kHz**
- **Video Performance**
  - **-48dB Off-Isolation at 10MHz**
  - **-60dB Crosstalk at 10MHz**
- **Serial Interface**
  - **2-Wire, I²C Compatible (MAX4586)**
  - **3-Wire, SPI/QSPI/MICROWIRE Compatible (MAX4587)**

Applications

Cellular Phones and Accessories

Private Mobile Radios (PMRs)

PC Multimedia Audio/Video Routing

Industrial Equipment

Set-Top Boxes

Video Conferencing

High-End Audio Equipment

Ordering Information

PART	TEMP. RANGE	PIN-PACKAGE
MAX4586EUB	-40°C to +85°C	10 µMAX
MAX4587EUB	-40°C to +85°C	10 µMAX

Pin Configuration/ Functional Diagram

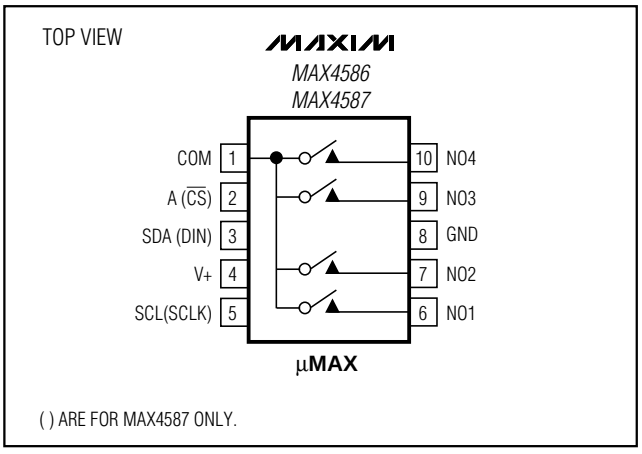

I²C is a trademark of Philips Corp.
SPI/QSPI are trademarks of Motorola, Inc.
MICROWIRE is a trademark of National Semiconductor Corp.

For free samples & the latest literature: http://www.maxim-ic.com, or phone 1-800-998-8800.
For small orders, phone 1-800-835-8769.

Serially Controlled, 4-Channel Audio/Video Multiplexers

ABSOLUTE MAXIMUM RATINGS

V+ to GND .....-0.3V to +6V
COM and NO_ to GND (Note 1).....-0.3V to (V+ + 0.3V)
A, $\overline{CS}$, SDA, DIN, SCL, and SCLK to GND.....-0.3V to +6V
Continuous Current into Any Terminal.....±20mA
Peak Current into Any Terminal
(pulsed at 1ms, 10% duty cycle).....±40mA
ESD per Method 3015.7.....>2kV

Continuous Power Dissipation (T_A = +70°C)
10-Pin µMAX (derate 4.1mW/°C above +70°C).....330mW
Operating Temperature Range .....-40°C to +85°C
Storage Temperature Range .....-65°C to +150°C
Lead Temperature (soldering, 10sec) .....+300°C

Note 1: Signals on NO_ or COM exceeding V+ or ground are clamped by internal diodes. Limit forward-diode current to maximum current rating.

Stresses beyond those listed under "Absolute Maximum Ratings" may cause permanent damage to the device. These are stress ratings only, and functional operation of the device at these or any other conditions beyond those indicated in the operational sections of the specifications is not implied. Exposure to absolute maximum rating conditions for extended periods may affect device reliability.

ELECTRICAL CHARACTERISTICS—Single +5V Supply

(V+ = +5V ±5%, T_A = T_{MIN} to T_{MAX}, unless otherwise noted. Typical values are at T_A = +25°C.) (Note 2)

PARAMETER	SYMBOL	CONDITIONS		MIN	TYP	MAX	UNITS
ANALOG SWITCHES							
Analog Signal Range (Note 3)	$V_{NO_}$, V_{COM}			0		V+	V
On-Resistance	R_{ON}	V+ = 4.75V, $V_{NO_}$ = 3V, I_{COM} = 4mA	T_A = +25°C		45	65	Ω
			T_A = T_{MIN} to T_{MAX}			80	
On-Resistance Match Between Channels (Note 4)	ΔR_{ON}	V+ = 4.75V, $V_{NO_}$ = 3V, I_{COM} = 4mA	T_A = +25°C		2	4	Ω
			T_A = T_{MIN} to T_{MAX}			5	
On-Resistance Flatness (Note 5)	R_{FLAT}	V+ = 4.75V; $V_{NO_}$ = 1V, 2V, 3V; I_{COM} = 4mA	T_A = +25°C		2	5	Ω
			T_A = T_{MIN} to T_{MAX}			6.5	
NO_ Off-Leakage Current (Note 6)	$I_{NO_(OFF)}$	V+ = 5.25V; $V_{NO_}$ = 1V, 4.5V; V_{COM} = 4.5V, 1V	T_A = +25°C	-1	0.001	1	nA
			T_A = T_{MIN} to T_{MAX}	-10		10	
COM Off-Leakage Current (Note 6)	$I_{COM(OFF)}$	V+ = 5.25V; $V_{NO_}$ = 1V, 4.5V; V_{COM} = 4.5V, 1V	T_A = +25°C	-1	0.001	1	nA
			T_A = T_{MIN} to T_{MAX}	-10		10	
COM On-Leakage Current (Note 6)	$I_{COM(ON)}$	V+ = 5.25V; $V_{NO_}$ = 1V, 4.5V, or floating; V_{COM} = 1V, 4.5V	T_A = +25°C	-1	0.002	1	nA
			T_A = T_{MIN} to T_{MAX}	-10		10	
AUDIO PERFORMANCE							
Off-Isolation (Note 7)	$V_{ISO(A)}$	V_A = 1.0V_{RMS}, f_{IN} = 20kHz, R_L = 600Ω, Figure 8			-83		dB
Channel-to-Channel Crosstalk	$V_{CT(A)}$	V_A = 1.0V_{RMS}, f_{IN} = 20kHz, R_S = 600Ω, Figure 8			-84		dB

ELECTRICAL CHARACTERISTICS—Single +5V Supply (continued)

(V+ = +5V ±5%, T_A = T_{MIN} to T_{MAX}, unless otherwise noted. Typical values are at T_A = +25°C.) (Note 2)

PARAMETER	SYMBOL	CONDITIONS		MIN	TYP	MAX	UNITS
VIDEO PERFORMANCE							
Off-Isolation (Note 7)	$V_{ISO(V)}$	V_A = 1.0V_{RMS}, f_{IN} = 10MHz, R_L = 50Ω, Figure 8			-48		dB
Channel-to-Channel Crosstalk	$V_{CT(V)}$	V_A = 1.0V_{RMS}, f_{IN} = 10MHz, R_S = 50Ω, Figure 8			-60		dB
-0.1dB Bandwidth	BW	R_S = 75Ω, R_L = 1kΩ			5		MHz
-3dB Bandwidth	BW	R_S = 50Ω, R_L = 50Ω			300		MHz
NO_ Off-Capacitance	C_{OFF}	f_{IN} = 1MHz			5		pF
DYNAMIC TIMING (Notes 8, 9, and Figure 5)							
Turn-On Time	t_{ON}	$V_{NO_}$ = 2.5V, R_L = 5kΩ, C_L = 35pF	T_A = +25°C		275	400	ns
			T_A = T_{MIN} to T_{MAX}			500	
Turn-Off Time	t_{OFF}	$V_{NO_}$ = 2.5V, R_L = 300Ω, C_L = 35pF	T_A = +25°C		125	200	ns
			T_A = T_{MIN} to T_{MAX}			250	
Break-Before-Make Time	t_{BBM}	$V_{NO_}$ = 2.5V, Figure 6		10	50		ns
Charge Injection	Q	C_L = 1.0nF, V_S = 0, R_S = 0, Figure 7			3		pC
POWER SUPPLY							
Power-Supply Voltage Range	V+			2.7		5.5	V
Supply Current	I+	All logic inputs = 0 or V+			5	10	µA

Serially Controlled, 4-Channel Audio/Video Multiplexers

ELECTRICAL CHARACTERISTICS—Single +3V Supply

(V+ = +3V ±10%, T_A = T_{MIN} to T_{MAX}, unless otherwise noted. Typical values are at T_A = +25°C.)

PARAMETER	SYMBOL	CONDITIONS		MIN	TYP	MAX	UNITS
ANALOG SWITCHES							
Analog Signal Range (Note 3)	$V_{NO_}$, V_{COM}			0		V+	V
On-Resistance	R_{ON}	V+ = 2.7V, $V_{NO_}$ = 1V, I_{COM} = 4mA	T_A = +25°C		65	110	Ω
			T_A = T_{MIN} to T_{MAX}			130	
On-Resistance Match Between Channels (Note 4)	ΔR_{ON}	V+ = 2.7V, $V_{NO_}$ = 1V, I_{COM} = 4mA	T_A = +25°C		3	5	Ω
			T_A = T_{MIN} to T_{MAX}			6	
On-Resistance Flatness (Note 5)	R_{FLAT}	V+ = 2.7V; $V_{NO_}$ = 1V, 1.5V, 2V; I_{COM} = 4mA	T_A = +25°C		3	10	Ω
			T_A = T_{MIN} to T_{MAX}			12	
NO_ Off-Leakage Current (Notes 6, 10)	$I_{NO_(OFF)}$	V+ = 3.6V; $V_{NO_}$ = 0.5V, 3V; V_{COM} = 3V, 0.5V	T_A = +25°C	-1	0.001	1	nA
			T_A = T_{MIN} to T_{MAX}	-10		10	
COM Off-Leakage Current (Notes 6, 10)	$I_{COM(OFF)}$	V+ = 3.6V; $V_{NO_}$ = 0.5V, 3V; V_{COM} = 3V, 0.5V	T_A = +25°C	-1	0.001	1	nA
			T_A = T_{MIN} to T_{MAX}	-10		10	
COM On-Leakage Current (Notes 6, 10)	$I_{COM(ON)}$	V+ = 3.6V; $V_{NO_}$ = 0.5V, 3V, or floating; V_{COM} = 0.5V, 3V	T_A = +25°C	-1	0.002	1	nA
			T_A = T_{MIN} to T_{MAX}	-10		10	
AUDIO PERFORMANCE							
Off-Isolation (Note 7)	$V_{ISO(A)}$	V_A = 0.5V_{RMS}, f_{IN} = 20kHz, R_L = 600Ω, Figure 8			-83		dB
Channel-to-Channel Crosstalk	$V_{CT(A)}$	V_A = 0.5V_{RMS}, f_{IN} = 20kHz, R_S = 600Ω, Figure 8			-84		dB
VIDEO PERFORMANCE							
Off-Isolation (Note 7)	$V_{ISO(V)}$	V_A = 0.5V_{RMS}, f_{IN} = 10MHz, R_L = 50Ω, Figure 8			-48		dB
Channel-to-Channel Crosstalk	$V_{CT(V)}$	V_A = 0.5V_{RMS}, f_{IN} = 10MHz, R_S = 50Ω, Figure 8			-60		dB
-3dB Bandwidth	BW	R_S = 50Ω, R_L = 50Ω			200		MHz
NO_ Off-Capacitance	C_{OFF}	f_{IN} = 1MHz			5		pF
DYNAMIC TIMING (Notes 8, 9, and Figure 5)							
Turn-On Time	t_{ON}	$V_{NO_}$ = 1.5V, R_L = 5kΩ, C_L = 35pF	T_A = +25°C		400	800	ns
			T_A = T_{MIN} to T_{MAX}			1000	
Turn-Off Time	t_{OFF}	$V_{NO_}$ = 1.5V, R_L = 300Ω, C_L = 35pF	T_A = +25°C		200	350	ns
			T_A = T_{MIN} to T_{MAX}			500	
Break-Before-Make Time	t_{BBM}	$V_{NO_}$ = 1.5V, Figure 6		10	100		ns

I/O INTERFACE CHARACTERISTICS

(V+ = +2.7V to +5.25V, T_A = T_{MIN} to T_{MAX}, unless otherwise noted. Typical values are at T_A = +25°C.)

PARAMETER	SYMBOL	CONDITIONS	MIN	TYP	MAX	UNITS
DIGITAL INPUTS (SCLK, DIN, $\overline{CS}$, SCL, SDA, A)						
Input Low Voltage	V_{IL}	V+ = 5V			0.8	V
		V+ = 3V			0.6	
Input High Voltage	V_{IH}	V+ = 5V	3			V
		V+ = 3V	2			
Input Hysteresis	V_{HYST}			0.2		V
Input Leakage Current	I_{LEAK}	Digital inputs = 0 or V+	-1	0.01	1	µA
Input Capacitance	C_{IN}	f = 1MHz		5		pF
DIGITAL OUTPUT (SDA)						
Output Low Voltage	V_{OL}	I_{SINK} = 6mA			0.4	V

2-WIRE TIMING CHARACTERISTICS

(Figures 1 and 2, V+ = +2.7V to +5.25V, f_{SCL} = 100kHz, T_A = T_{MIN} to T_{MAX}, unless otherwise noted. Typical values are at T_A = +25°C.)

PARAMETER	SYMBOL	CONDITIONS	MIN	TYP	MAX	UNITS
SCL Clock Frequency	f_{SCL}	V+ = 2.7V to 5.25V	0		100	kHz
		V+ = 4.75V to 5.25V			400	
Bus Free Time Between Stop and Start Condition	t_{BUF}		4.7			µs
Hold Time After Start Condition	$t_{HD:STA}$	The first clock is generated after this period.	4.0			µs
Stop Condition Setup Time	$t_{SU:STO}$		4.0			µs
Data Hold Time	$t_{HD:DAT}$		0			µs
Data Setup Time	$t_{SU:DAT}$		250			ns
Clock Low Period	t_{LOW}		4.7			µs
Clock High Period	t_{HIGH}		4.0			µs
SCL/SDA Rise Time (Note 11)	t_R		20 + 0.1C_B		300	ns
SCL/SDA Fall Time (Note 11)	t_F		20 + 0.1C_B		300	ns

3-WIRE TIMING CHARACTERISTICS

(Figures 3 and 4, V+ = +2.7V to +5.25V, f_{OP} = 2.1MHz, $T_A = T_{MIN}$ to T_{MAX}, unless otherwise noted. Typical values are at T_A = +25°C.)

PARAMETER	SYMBOL	CONDITIONS	MIN	TYP	MAX	UNITS
Operating Frequency	f_{OP}	V+ = 2.7V to 5.25V	0		2.1	MHz
		V+ = 4.75V to 5.25V			10	
DIN to SCLK Setup	t_{DS}		100			ns
DIN to SCLK Hold	t_{DH}		0			ns
$\overline{CS}$ Fall to SCLK Rise Setup	t_{CSS}		100			ns
$\overline{CS}$ Rise to SCLK Hold	t_{CSH}		0			ns
SCLK Pulse Width Low	t_{CL}		200			ns
SCLK Pulse Width High	t_{CH}		200			ns
Rise Time (SCLK, DIN, $\overline{CS}$)	t_R				2	µs
Fall Time (SCLK, DIN, $\overline{CS}$)	t_F				2	µs
$\overline{CS}$ Pulse Width High	t_{CSW}			40		ns

Note 2: Algebraic convention is used in this data sheet; the most negative value is shown in the minimum column.
Note 3: Guaranteed by design. Not subject to production testing.
Note 4: $\Delta R_{ON} = R_{ON(MAX)} - R_{ON(MIN)}$.
Note 5: Resistance flatness is defined as the difference between the maximum and minimum on-resistance values, as measured over the specified analog signal range.
Note 6: Leakage parameters are 100% tested at maximum rated temperature and guaranteed by correlation at T_A = +25°C.
Note 7: Off-isolation = 20log (V_{COM} / $V_{NO_}$), V_{COM} = output, $V_{NO_}$ = input to off switch.
Note 8: All timing is measured from the clock's falling edge preceding the ACK signal for 2-wire and from the rising edge of $\overline{CS}$ for 3-wire. Turn-off time is defined at the output of the switch for a 0.5V change, tested with a 300Ω load to ground. Turn-on time is defined at the output of the switch for a 0.5V change and measured with a 5kΩ load resistor to GND. All timing is shown with respect to 20% V+ and 70% V+, unless otherwise noted.
Note 9: Typical values are for MAX4586 devices.
Note 10: Leakage testing is guaranteed by testing with a +5.25V supply.
Note 11: C_B = capacitance of one bus line in pF. Tested with C_B = 400pF.

Typical Operating Characteristics

(V+ = +5V, T_A = +25°C, unless otherwise noted.)

ON-RESISTANCE vs. V_{COM} AND SUPPLY VOLTAGE

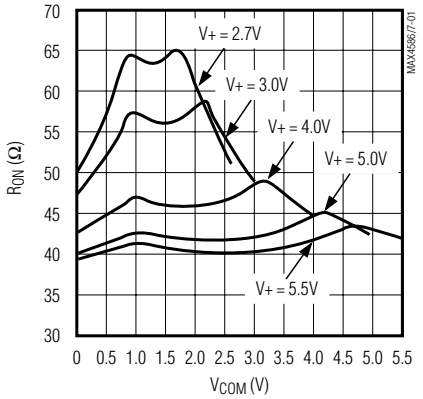

ON-RESISTANCE vs. V_{COM} AND TEMPERATURE (V+ = 5V)

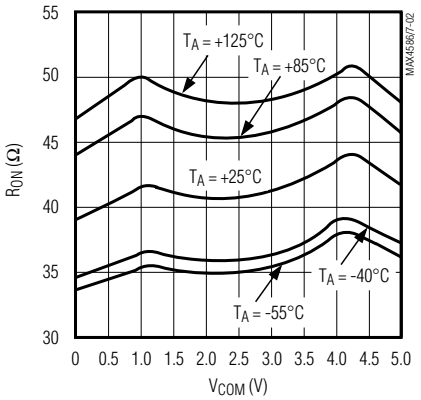

ON-RESISTANCE vs. V_{COM} AND TEMPERATURE (V+ = 3.3V)

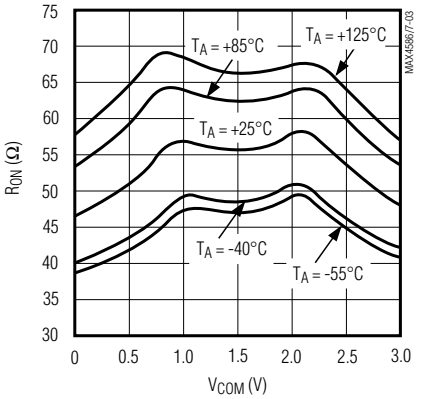

Typical Operating Characteristics (continued)

(V+ = +5V, T_A = +25°C, unless otherwise noted.)

SUPPLY CURRENT vs. TEMPERATURE

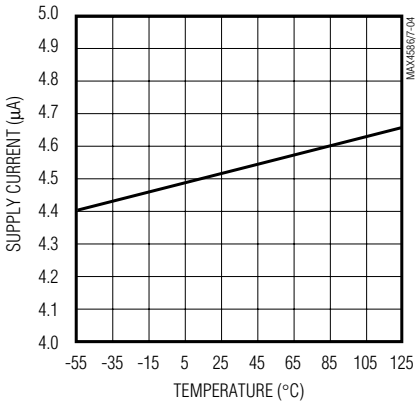

CHARGE INJECTION vs. V_{COM}

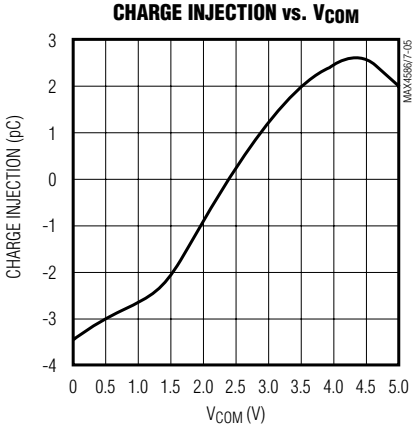

TURN-ON AND TURN-OFF TIMES vs. SUPPLY VOLTAGE

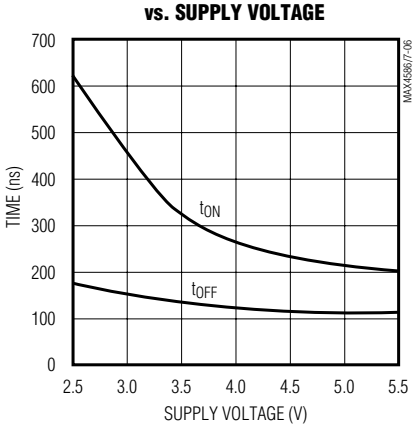

TURN-ON/TURN-OFF TIMES vs. TEMPERATURE

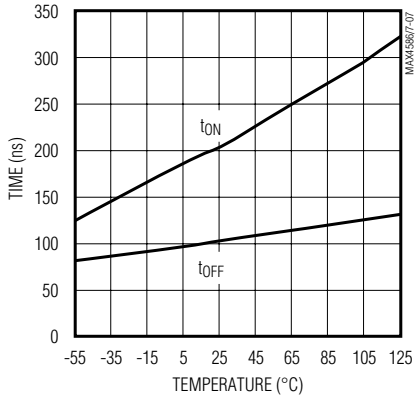

ON-LEAKAGE CURRENT vs. TEMPERATURE

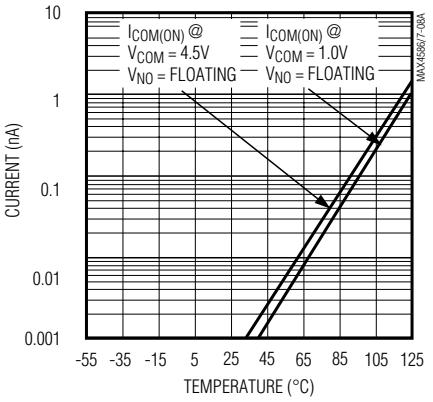

OFF-LEAKAGE CURRENT vs. TEMPERATURE

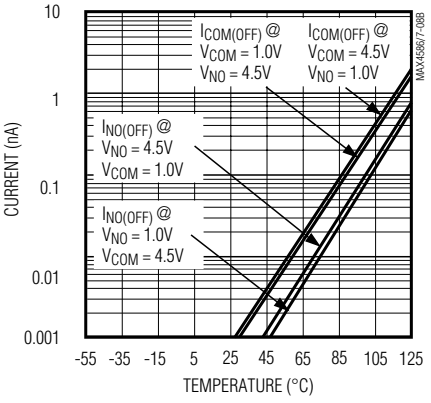

AUDIO FREQUENCY RESPONSE

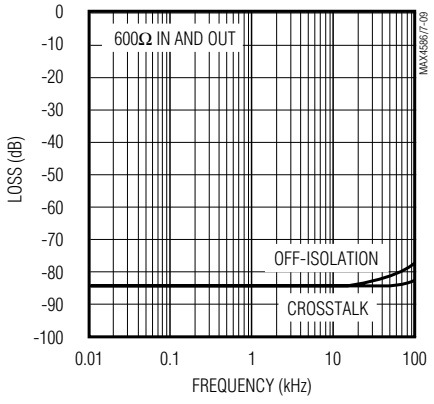

VIDEO FREQUENCY RESPONSE

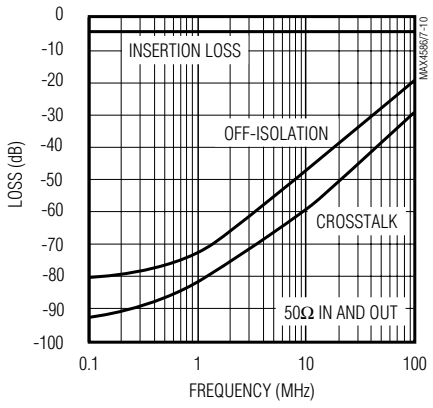

TURN-ON/TURN-OFF TIMES

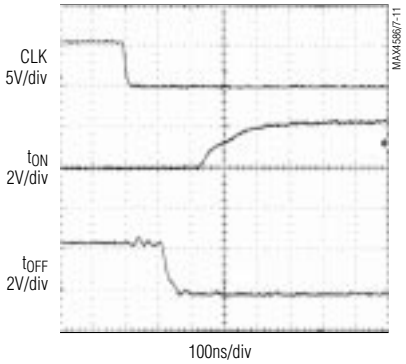

Serially Controlled, 4-Channel Audio/Video Multiplexers

Pin Description

PIN		NAME	FUNCTION
MAX4586	MAX4587		
1	1	COM	Analog Switch Common Terminal
2	—	A	LSB + 2 of the 2-Wire Serial-Interface Address Field
—	2	$\overline{CS}$	Chip Select of the 3-Wire Serial Interface
3	—	SDA	Data Input of 2-Wire Serial Interface
—	3	DIN	Data Input of 3-Wire Serial Interface
4	4	V+	Supply Voltage
5	—	SCL	Clock Input of the 2-Wire Serial Interface
—	5	SCLK	Clock Input of the 3-Wire Serial Interface
6	6	NO1	Mux Normally Open Output 1
7	7	NO2	Mux Normally Open Output 2
8	8	GND	Ground
9	9	NO3	Mux Normally Open Output 3
10	10	NO4	Mux Normally Open Output 4

Detailed Description

The MAX4586/MAX4587 are serial-interface, programmable multiplexers. Each device contains a 4-to-1 normally open (NO) multiplexer. Each switch is independently controlled through the on-chip serial interface. The MAX4586 uses a 2-wire, I²C-compatible serial communications protocol, and the MAX4587 uses a 3-wire, SPI/QSPI/MICROWIRE-compatible serial communications protocol.

These devices operate from a single +2.7V to +5.5V supply and are optimized for use with an audio frequency at 20kHz and video frequencies up to 10MHz. They feature 65Ω on-resistance, 4Ω on-resistance matching between channels, and 5Ω on-resistance flatness. Audio off-isolation is -83dB at 20kHz and crosstalk is at least -84dB at 20kHz, while video off-isolation is -48dB at 10MHz and crosstalk is at least -60dB at 10MHz.

Applications Information

Multiplexer Control

The MAX4586/MAX4587 have a common command-bit structure; the only difference between them is the interface type (2-wire or 3-wire, respectively).

The command controls the open/closed states of the various switches. Table 1 shows the configuration of the data bits and their related switches. After a command is issued, a logic “1” in any data-bit location closes the associated switch, while a logic “0” opens it (Table 2).

2-Wire Serial Interface

The MAX4586 uses a 2-wire, I²C-compatible serial interface. The COM_ register uses the “SendByte” protocol that consists of an address byte followed by a command byte (Table 1).

To address a given chip, the A bit in the address byte must duplicate the value present at the A pin of that chip. The rest of the address bits must match those shown in Table 3. The command byte details are described in the *Switch Control* section.

The 2-wire serial interface requires only two I/O lines of a standard microprocessor (µP) port. Figures 1 and 2 detail the timing diagram for signals on the 2-wire bus, and Tables 1 and 3 detail the format of the signals. The MAX4586 is a receive-only device and must be controlled by the bus master device. A bus master device communicates by transmitting the address byte of the slave device over the bus and then transmitting the desired information. Each transmission consists of a start condition, an address byte, a command byte, and finally a stop condition. The slave device acknowledges the recognition of its address by pulling the SDA line low for one clock period after the address byte is transmitted. The slave device also issues a similar acknowledgment after the command byte.

Table 1. Command-Bit Mapping

COMMAND BIT	SWITCH	TERMINALS	POWER-UP STATE
D7 (MSB)	x		x
D6	x		x
D5	x		x
D4	x		x
D3	NO4 to COM	10, 1	0 (Open)
D2	NO3 to COM	9, 1	0 (Open)
D1	NO2 to COM	7, 1	0 (Open)
D0 (LSB)	NO1 to COM	6, 1	0 (Open)

X = Don't care

Table 2. Truth Table

LOGIC	NO_ SWITCH
0	OPEN
1	CLOSED

Table 3. Address Bit Map

ADDRESS BIT (A)	ADDRESS
0	0110 1010
1	0110 1110

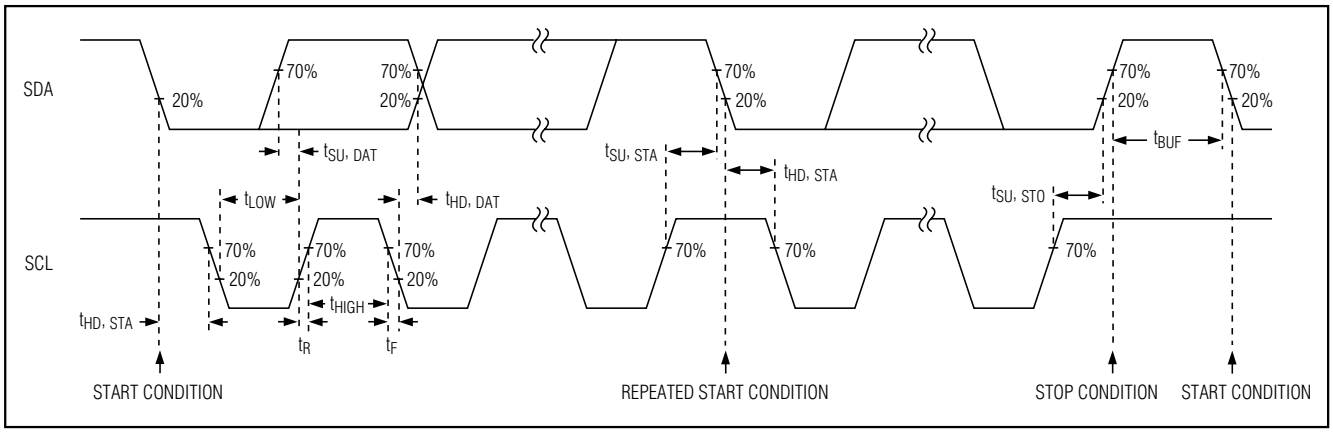

Figure 1. 2-Wire Serial-Interface Timing Diagram

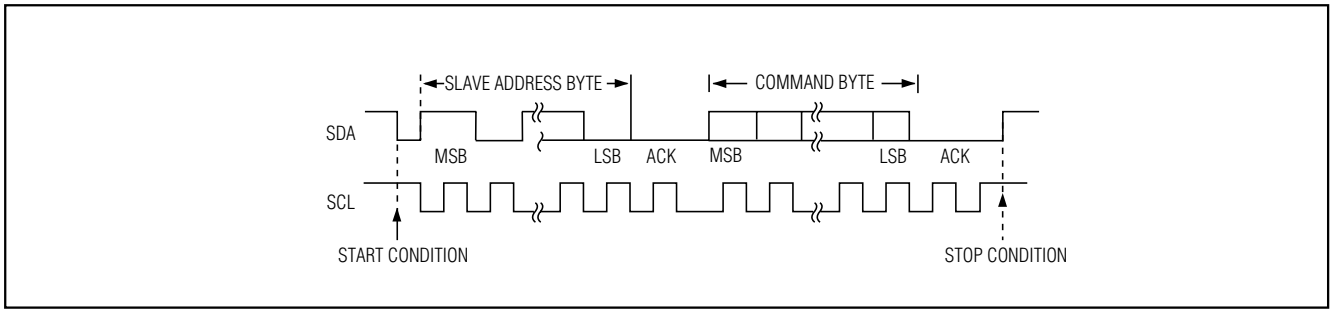

Figure 2. Complete 2-Wire Serial-Interface Transmission

Start and Stop Conditions

The bus master signals the beginning of a transmission with a start condition by transitioning SDA from high to low while SCL is high. When the bus master has finished communicating with the slave device, it issues a stop condition by transitioning SDA from low to high while SCL is high. The bus master is then free for another transmission.

Slave Address (Address Byte)

The MAX4586 uses an 8-bit-long slave address. To select a slave address, connect A to V+ or GND. The MAX4586 has two possible slave addresses, so a maximum of two of these devices may share the same address line. The slave device MAX4586 monitors the serial bus continuously, waiting for a start condition followed by an address byte. When a slave device recog-

Serially Controlled, 4-Channel Audio/Video Multiplexers

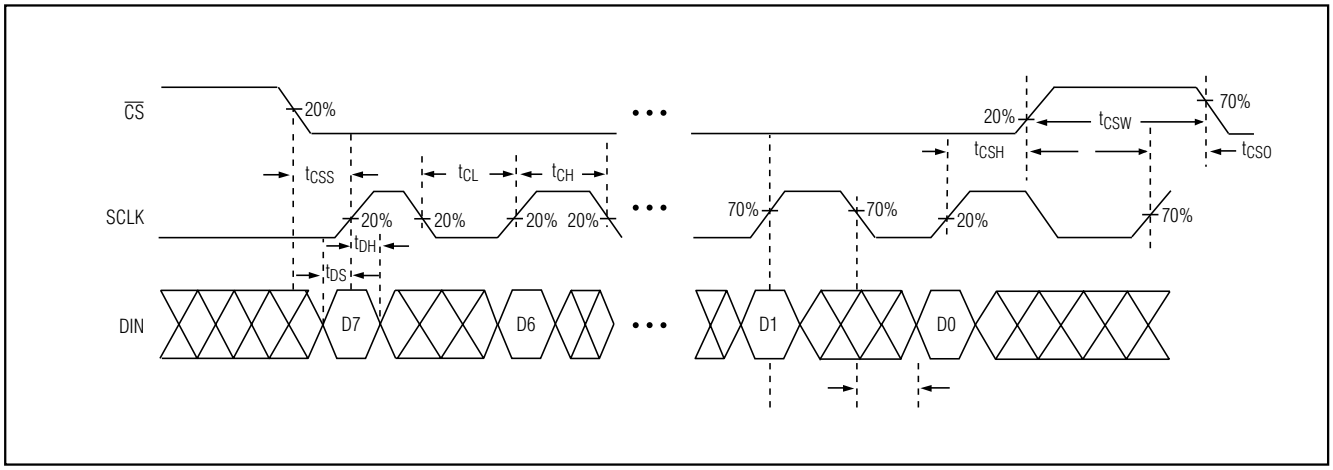

Figure 3. 3-Wire Serial-Interface Timing Diagram

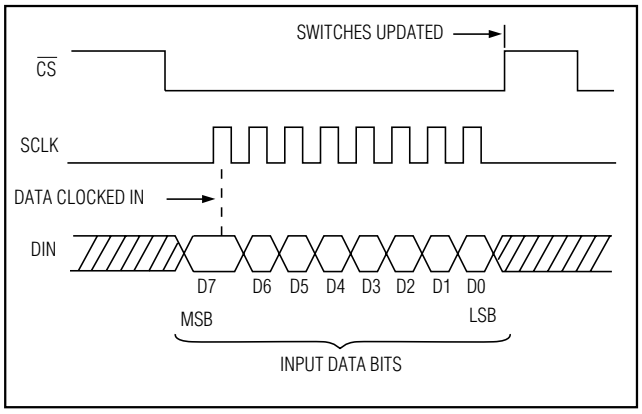

Figure 4. Complete 3-Wire Serial Transmission

nizes its address (01101A10), it acknowledges that it is ready for further communication by pulling the SDA line low for one clock period.

3-Wire Serial Interface

The MAX4587 3-wire serial interface is SPI/QSPI/MICROWIRE compatible. An active-low chip-select ($\overline{CS}$) input enables the device to receive data for the serial input (DIN). Data is clocked in on the rising edge of the serial-clock (SCLK) signal. A total of 8 bits is needed in each write cycle. The first bit clocked into the MAX4587 is the command byte's MSB, and the last bit clocked in is the data byte's LSB. The first four bits of the command byte are "don't care." While shifting data, the device remains in its original configuration. After all eight bits are clocked into the input shift register, a rising edge on $\overline{CS}$ latches the data into the MAX4587 internal registers, initiating the device's change of state. Figures 3 and 4 detail the 3-wire protocol, and Table 1 details the command byte format.

Addressable Serial Interface

To program several MAX4587s individually using a single processor, connect DIN of each MAX4587 together and control $\overline{CS}$ on each MAX4587 separately. To select a particular device, drive the corresponding $\overline{CS}$ low, clock in the 8-bit command, then drive $\overline{CS}$ high to execute the command. Typically, only one MAX4587 is addressed at a time.

Power-Up State

The MAX4586/MAX4587 feature a preset power-up state. See Table 1 to determine the power-up state of the devices.

Chip Information

TRANSISTOR COUNT: 2259

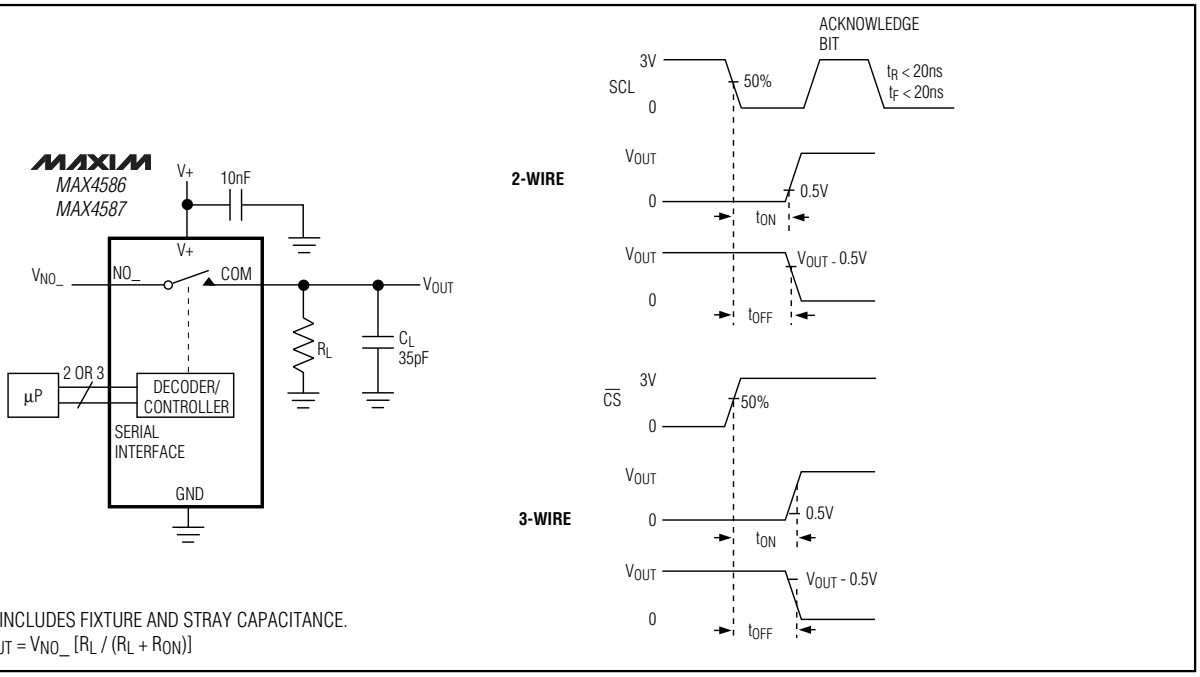

C_L INCLUDES FIXTURE AND STRAY CAPACITANCE.
$V_{OUT} = V_{NO_} [R_L / (R_L + R_{ON})]$

Figure 5. Switching Time

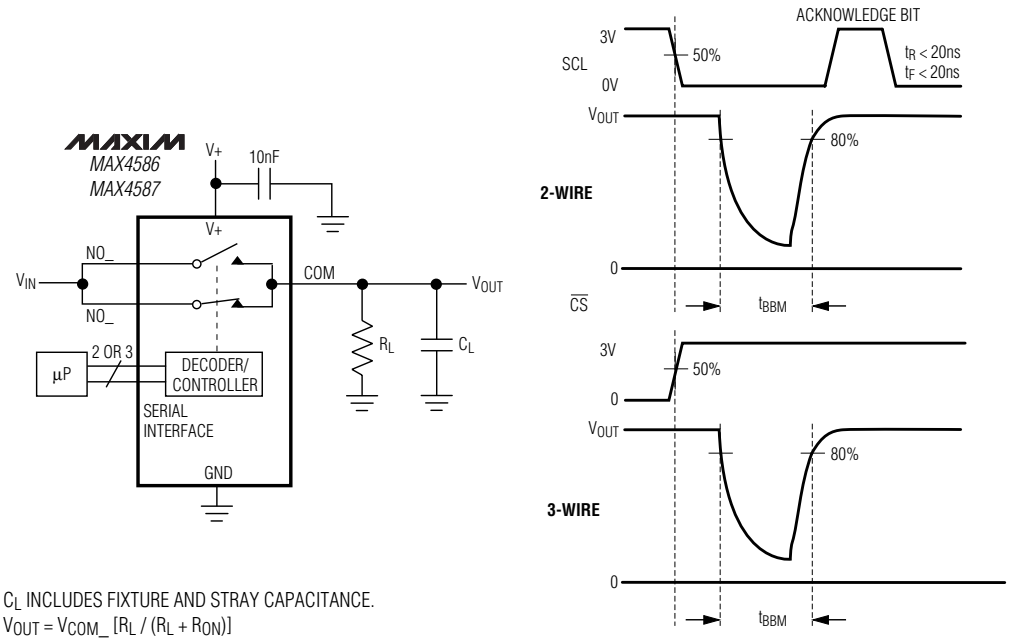

C_L INCLUDES FIXTURE AND STRAY CAPACITANCE.
$V_{OUT} = V_{COM_} [R_L / (R_L + R_{ON})]$

Figure 6. Break-Before-Make Interval

Serially Controlled, 4-Channel Audio/Video Multiplexers

Test Circuits/Timing Diagrams (continued)

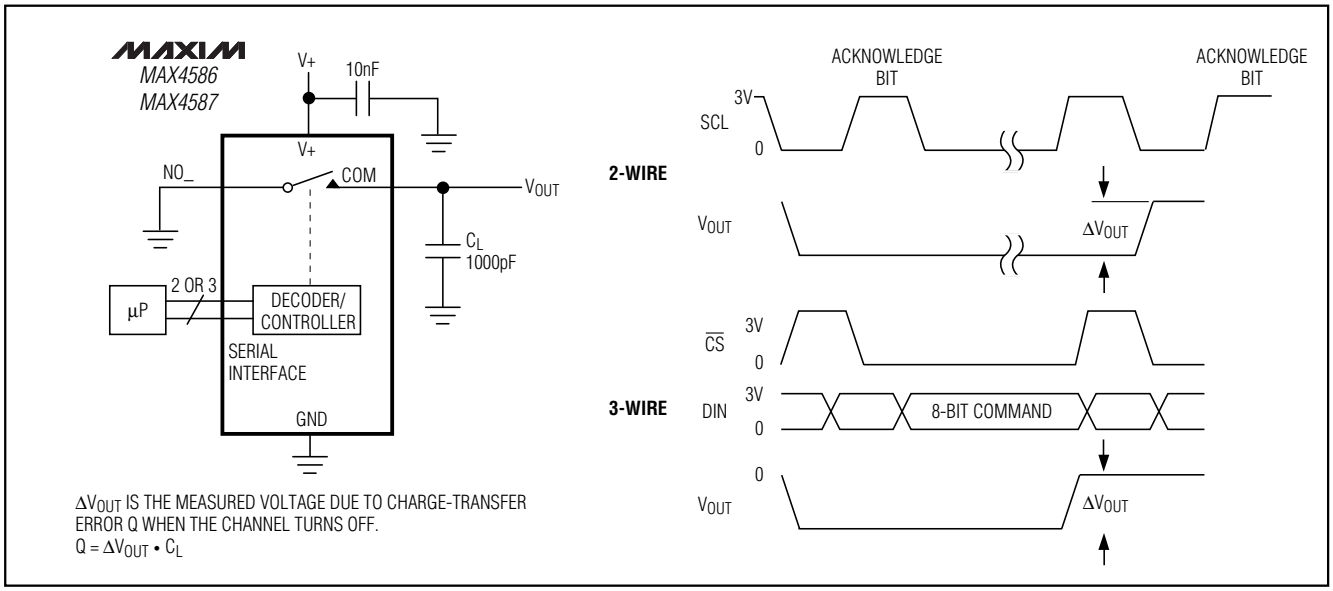

Figure 7. Charge Injection

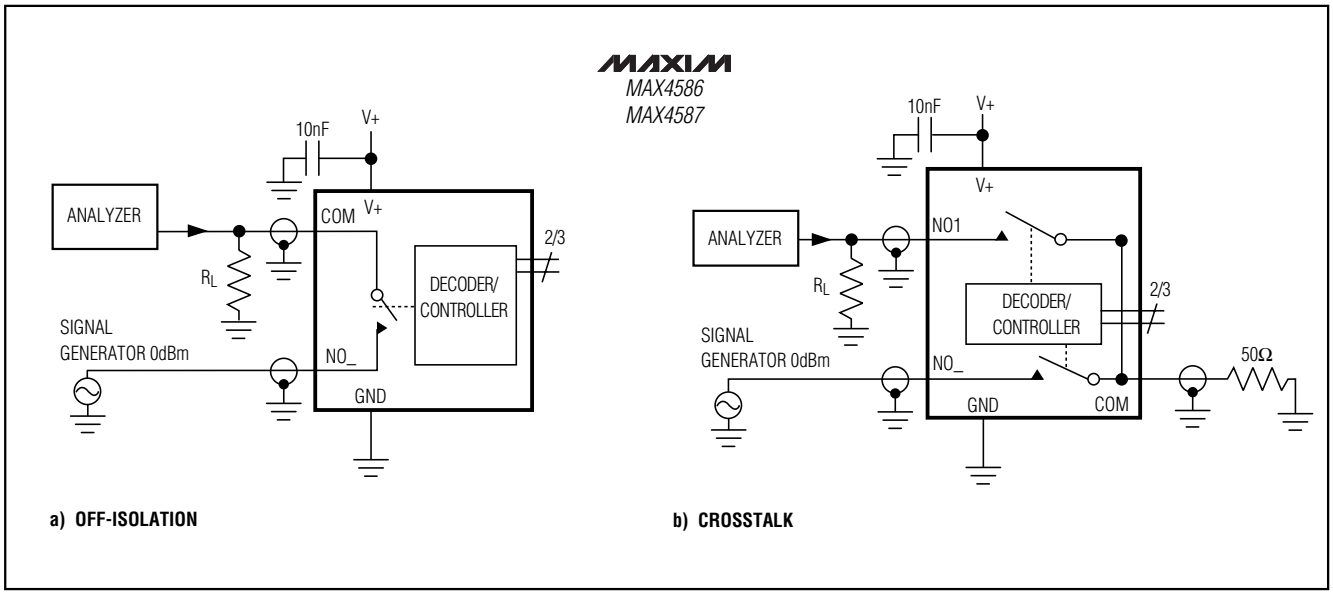

Figure 8. Off-Isolation and Crosstalk

Maxim cannot assume responsibility for use of any circuitry other than circuitry entirely embodied in a Maxim product. No circuit patent licenses are implied. Maxim reserves the right to change the circuitry and specifications without notice at any time.

© 1999 Maxim Integrated Products Printed USA MAXIM is a registered trademark of Maxim Integrated Products.

Looking for pricing, stock, or lifecycle information?

Click below to explore more details on WIN SOURCE:

- View MAX4586EUB+T on WIN SOURCE
- Maxim Integrated Information

Optimize Your Supply Chain with WIN SOURCE Solutions

- Global Sourcing Solution
- Obsolete Management
- Cost Control Management
- Shortage Management
- Alternative Solution
- Excess Inventory Management