THE DATASHEET OF

MAX562CAI-T

www.win-source.net 0086-755-83957316

19-0144; Rev. 0; 9/93

MAXIM

Complete 230kbps, 2.7V to 5.25V Serial Interface for Notebook Computers

General Description

The MAX562 is designed specifically for notebook and palmtop computers that need to transfer data quickly. It runs at data rates up to 230kbps, and has a guaranteed 4V/µs slew rate. This device meets the new EIA/TIA-562 standard that guarantees compatibility with RS-232 interfaces.

The MAX562 has low-power shutdown and keep-awake modes. In keep-awake mode, the transmitters are disabled but all receivers are active, allowing unidirectional communication. In shutdown mode, the entire chip is disabled and all outputs are in a high-impedance state.

The MAX562 is available in a standard 28-pin SO package, and in a smaller footprint shrink small-outline package (SSOP).

Applications

Palmtop, Notebook, and Subnotebook Computers

Peripherals

Battery-Powered Equipment

Typical Operating Circuit

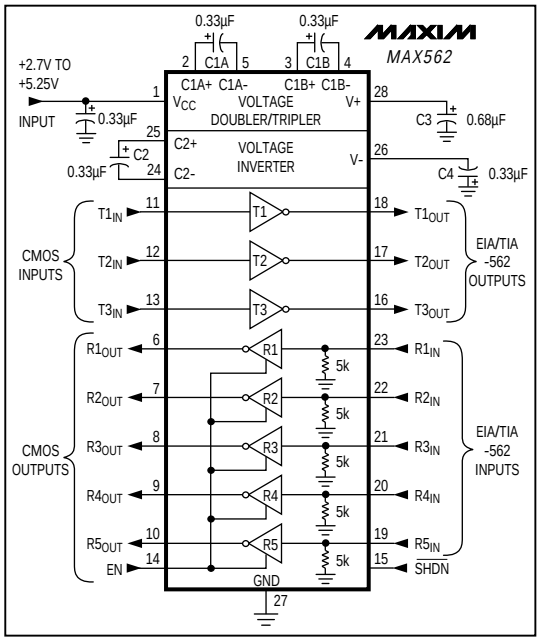

™ LapLink is a registered trademark of Traveling Software, Inc.

Features

- **230kbps Data Rate, LapLink™ Compatible**
- **Operates from a 2.7V to 5.25V Supply**
- **Designed for EIA/TIA-562 and EIA/TIA-232 Applications**
- **Guaranteed 4.0V/µs Slew Rate**
- **3 Drivers, 5 Receivers**
- **Flow Through Pinout**
- **Low-Power Shutdown and Keep-Awake Modes**
- **Low-Cost, Surface-Mount External Capacitors**

Ordering Information

PART	TEMP. RANGE	PIN-PACKAGE
MAX562CWI	0°C to +70°C	28 SO
MAX562CAI	0°C to +70°C	28 SSOP
MAX562C/D	0°C to +70°C	Dice*
MAX562EWI	-40°C to +85°C	28 SO
MAX562EAI	-40°C to +85°C	28 SSOP

** Contact factory for dice specifications.*

Pin Configuration

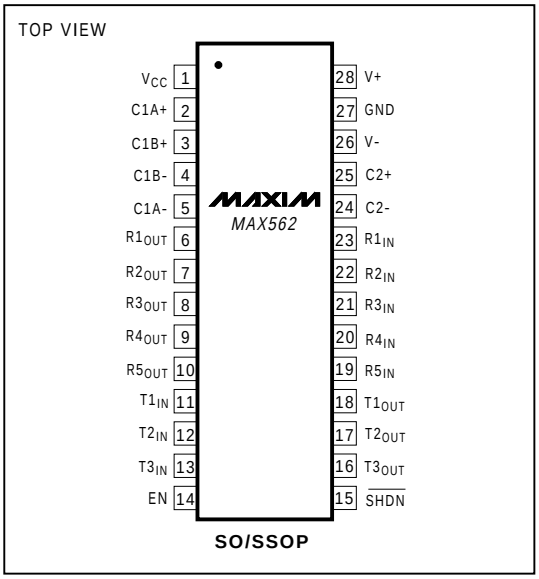

Call toll free 1-800-998-8800 for free samples or literature.

Complete 230kbps, 2.7V to 5.25V Serial Interface for Notebook Computers

ABSOLUTE MAXIMUM RATINGS

V_{CC} ..... -0.3V to +6V
V+ ..... (V_{CC} - 0.3V) to +6V
V- ..... +0.3V to -6V
C1A+, C1B+ ..... -6V to (V+ + 0.3V)
C1A-, C1B-, C2+ ..... -0.3V to (V+ + 0.3V)
C2- ..... (V- - 0.3V) to +6V
Input Voltages
  T_{IN}, EN, $\overline{SHDN}$ ..... -0.3V to (V_{CC} + 0.3V)
  R_{IN} ..... ±25V
Output Voltages
  T_{OUT} ..... ±15V
  R_{OUT} ..... -0.3V to (V_{CC} + 0.3V)
Short-Circuit Duration
  T_{OUT} to GND ..... Continuous
  R_{OUT} to GND, V_{CC} ..... Continuous
Continuous Power Dissipation (T_A = +70°C)
  SO (derate 12.50mW/°C above +70°C) 1000mW
  SSOP (derate 9.52mW/°C above +70°C) 762mW
Operating Temperature Ranges:
  MAX562C_ _ ..... 0°C to +70°C
  MAX562E_ _ ..... -40°C to +85°C
Storage Temperature Range ..... -65°C to +160°C
Lead Temperature (soldering, 10sec) ..... +300°C

Stresses beyond those listed under "Absolute Maximum Ratings" may cause permanent damage to the device. These are stress ratings only, and functional operation of the device at these or any other conditions beyond those indicated in the operational sections of the specifications is not implied. Exposure to absolute maximum rating conditions for extended periods may affect device reliability.

ELECTRICAL CHARACTERISTICS

(V_{CC} = 2.7V to 5.25V, C1A = C1B = C2 = C4 = 0.33µF, C3 = 0.68µF, T_A = T_{MIN} to T_{MAX}, unless otherwise noted.)

PARAMETER	CONDITIONS		MIN	TYP	MAX	UNITS
EIA/TIA-562 TRANSMITTERS						
Output Voltage Swing	All transmitter outputs loaded with 3kΩ to GND		±3.7	±4.5	±6.0	V
Input Logic Threshold Low	T_{IN}, EN, $\overline{SHDN}$	V_{CC} = 2.7V to 3.6V			0.6	V
		V_{CC} = 5.0V +5%, -10%			0.8	
Input Logic Threshold High	T_{IN}, EN, $\overline{SHDN}$	V_{CC} = 2.7V to 3.6V	1.8			V
		V_{CC} = 5.0V +5%, -10%	3.0			
Output Leakage Current					±10	µA
Output Resistance	V_{CC} = V+ = V- = 0V, V_{OUT} = ±2V		300			Ω
Output Short-Circuit Current	V_{OUT} = 0V				±60	mA
EIA/TIA-562 RECEIVERS						
Input Voltage Operating Range					±25	V
Input Threshold Low			0.8			V
Input Threshold High					2.4	V
Input Hysteresis	No hysteresis when $\overline{SHDN}$ = 0V			0.3		V
Input Resistance	-15V < V_{IN} < 15V		3	5	7	kΩ
Output Voltage Low	I_{OUT} = 1.6mA				0.4	V
Output Voltage High	I_{OUT} = -1.0mA		V_{CC} -0.5			V
Output Leakage Current	EN = GND, 0V ≤ R_{OUT} ≤ V_{CC}			0.05	±10	µA
POWER SUPPLY						
Operating Supply Voltage			2.7		5.25	V
V_{CC} Power-Supply Current	V_{CC} = 3.3V	No load		20	33	mA
		All outputs loaded 3kΩ		24		
Shutdown Supply Current with Receivers Active	EN = V_{CC}, $\overline{SHDN}$ = GND, T_A = +25°C			45	130	µA
Shutdown Supply Current	$\overline{SHDN}$ = EN = GND, T_A = +25°C			1	50	µA

AC CHARACTERISTICS

PARAMETER	CONDITIONS		MIN	TYP	MAX	UNITS
Data Rate	1000pF ‖ 3kΩ load each transmitter output, 150pF load each receiver output		230.4	280.0		kbits/sec
Transmitter Slew Rate	C_L = 50pF to 2500pF, R_L = 3kΩ to 7kΩ. Measured from +3V to -3V, or -3V to +3V		4	6	30	V/µs
Transmitter Rise/Fall Time	R_L = 3kΩ measured from +3.3V to -3.3V or -3.3V to +3.3V	C_L = 2500pF	0.22		3.1	µs
		C_L = 1000pF	0.22		2.1	
Transmitter Propagation Delay	2500pF ‖ 3kΩ load, Figure 1	t_{PHLT}		900	1700	ns
		t_{PLHT}		1000	1700	
Transmitter-Output Enable Time		t_{ET}		100		µs
Transmitter-Output Disable Time	Figure 3	t_{DT}		600		ns
Receiver Propagation Delay, Normal Operation	C_L = 150pF, $\overline{SHDN}$ = V_{CC} Figure 2	t_{PHLR}		100	250	ns
		t_{PLHR}		250	500	
Receiver Propagation Delay, Keep-Awake Mode	C_L = 150pF, $\overline{SHDN}$ = GND Figure 2	t_{PHLS}		3000	4000	ns
		t_{PLHS}		2000	3000	
Receiver-Output Enable Time	Figure 4	t_{ER}		100	250	ns
Receiver-Output Disable Time	Figure 4	t_{DR}		250	500	ns

Complete 230kbps, 2.7V to 5.25V Serial Interface for Notebook Computers

Typical Operating Characteristics

(V_{CC} = 3.3V, C1A = C1B = C2 = C4 = 0.33µF, C3 = 0.68µF, T_A=+25°C, unless otherwise noted.)

TRANSMITTER SLEW RATE vs. LOAD CAPACITANCE

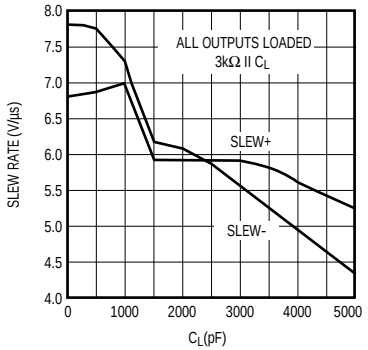

TRANSMITTER OUTPUT VOLTAGE vs. TEMPERATURE

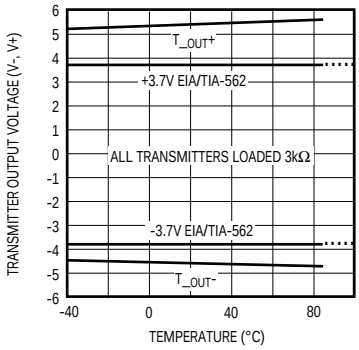

TRANSMITTER OUTPUT VOLTAGE vs. LOAD CAPACITANCE, TO 231kbps

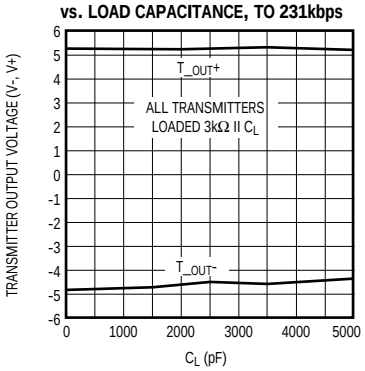

SUPPLY CURRENT vs. SUPPLY VOLTAGE

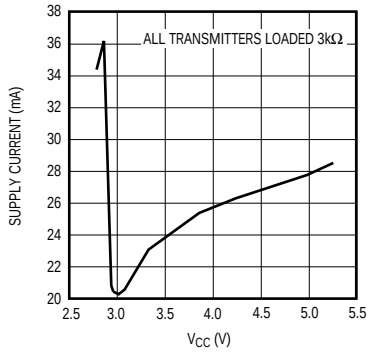

SUPPLY CURRENT vs. TEMPERATURE

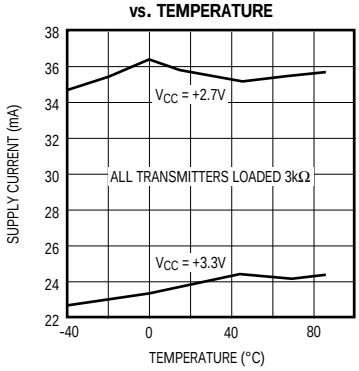

SUPPLY CURRENT vs. TRANSMITTER DATA RATE

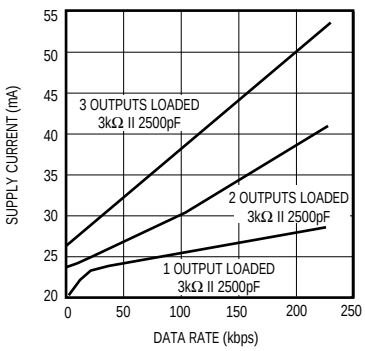

SUPPLY CURRENT vs. TEMPERATURE

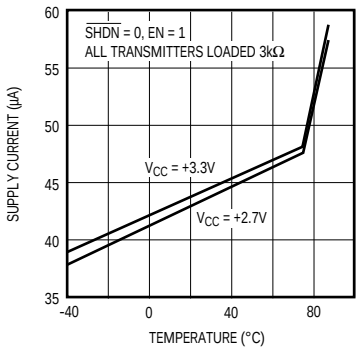

Pin Description

PIN	NAME	FUNCTION
28	V+	Positive charge-pump output, typically 5.8V
2, 5	C1A+, C1A-	Terminals for positive charge-pump capacitor
3, 4	C1B+, C1B-	Terminals for positive charge-pump capacitor
6, 7, 8, 9, 10	$R_{_OUT}$	TTL/CMOS Receiver Outputs.
11, 12, 13	$T_{_IN}$	TTL/CMOS Driver Inputs
14	EN	Receiver Enable, see *Shutdown and Enable Control* section.
15	$\overline{SHDN}$	Shutdown Control, see *Shutdown and Enable Control* section.
16, 17, 18	$T_{_OUT}$	EIA/TIA-562 Driver Outputs
19, 20, 21, 22, 23	$R_{_IN}$	EIA/TIA-562 Receiver Inputs
24, 25	C2+, C2-	Terminals for negative charge-pump capacitor
26	V-	Negative charge-pump output, typically -5.2V
27	GND	Ground
1	V_{CC}	+2.7V to +5.25V Supply Voltage

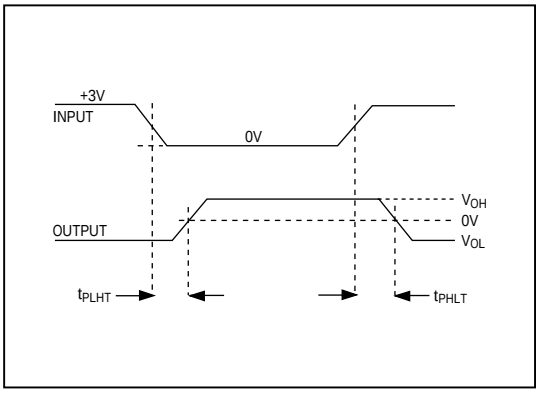

Figure 1. Transmitter Propagation Delay Timing

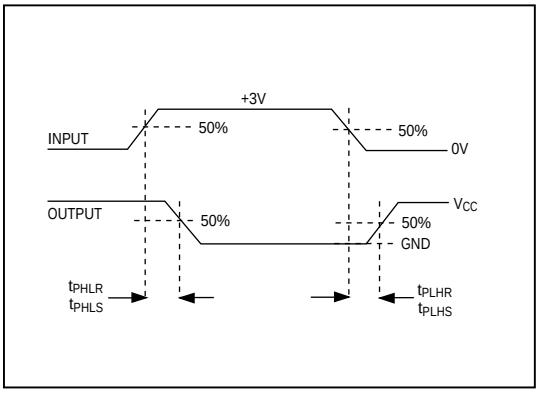

Figure 2. Receiver Propagation Delay Timing

Complete 230kbps, 2.7V to 5.25V Serial Interface for Notebook Computers

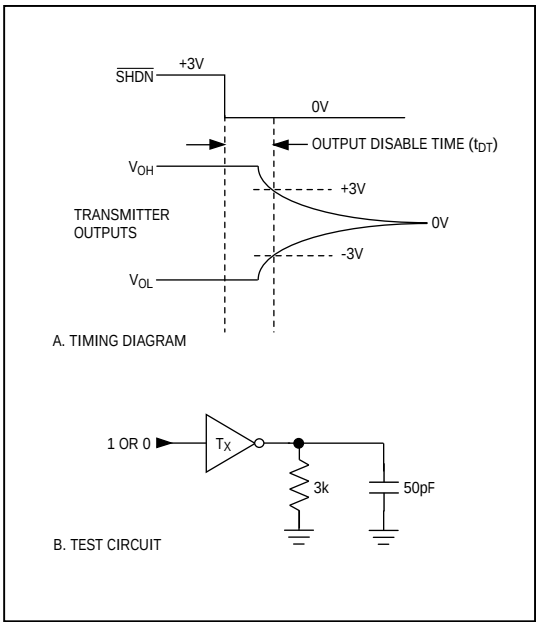

Figure 3. Transmitter-Output Disable Timing

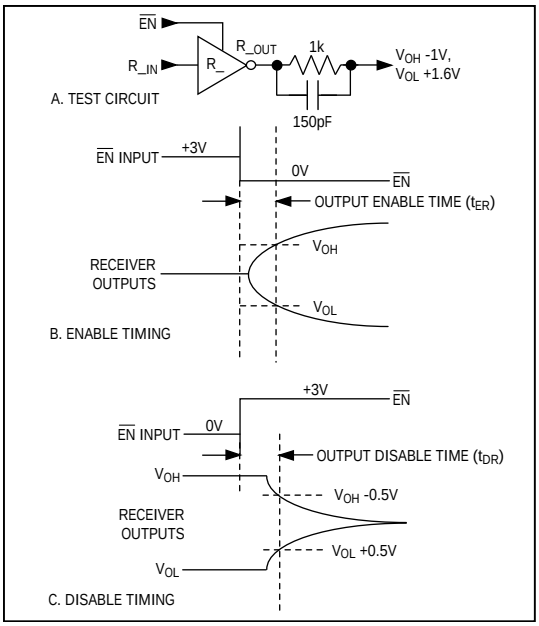

Figure 4. Receiver-Output Enable and Disable Timing

Detailed Description

The MAX562 has three sections: the charge-pump voltage converter, the drivers (transmitters), and the receivers.

Charge-Pump Voltage Converter

The charge-pump voltage converter is used to produce a positive and a negative supply to drive the transmitters. The positive voltage (V+) is generated by a regulated charge pump working as either a doubler or a tripler (depending on the V_{CC} level) and using capacitors C1A, C1B and C3 (see *Typical Operating Circuit*). The negative voltage (V-) derives from V+ using a simple charge-pump inverter that employs capacitors C2 and C4.

These charge-pump converters are regulated to give output voltages of +5.8V and -5.2V. Having regulated supplies generated on-chip makes the MAX562's performance insensitive to variations in V_{CC} from 2.7V to 5.25V, transmitter loading changes, and operating temperature changes.

When $\overline{SHDN}$ is low, the charge pumps are disabled, V+ is internally connected to V_{CC}, and V- is internally connected to GND.

EIA/TIA-562 Drivers

The driver output voltage is guaranteed to meet the ±3.7V EIA/TIA-562 specification over the full range of operating temperatures and voltages, when each transmitter is loaded with up to 3kΩ and operated up to 230kbps (see *Typical Operating Characteristics*). The typical driver output voltage swing exceeds ±4V with a 3kΩ load on all transmitter outputs. The open-circuit output voltage swing is typically from (V+ - 0.7V) to (V- + 0.7V). Output swing is not significantly dependent on V_{CC} since the charge pumps are regulated.

Input thresholds are CMOS and TTL compatible. Connect unused inputs to V_{CC} or to GND.

When $\overline{SHDN}$ is low, the driver outputs are off and their leakage currents are less than 10µA, even if the transmitter outputs are back-driven between -7V and +15V. Taking $\overline{SHDN}$ low does not disable the receivers.

When $\overline{SHDN}$ and EN are both low, the entire chip is disabled and all outputs are high impedance. Power consumption is lowest in this condition. Exiting shutdown takes about 100µs, but depends on V_{CC}. Figure 5 shows

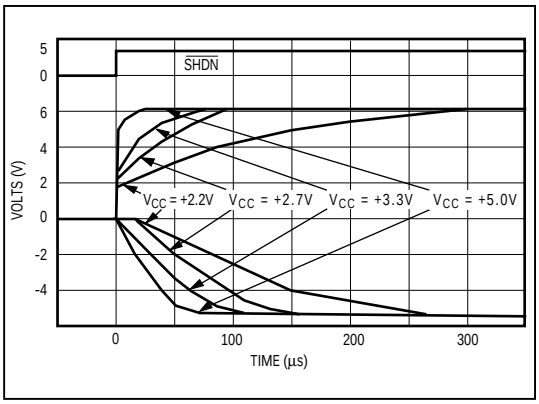

Figure 5. Time for Transmitters to Exit Shutdown

the MAX562 transmitter outputs when $\overline{SHDN}$ rises. Two transmitter outputs are shown going to opposite EIA/TIA-562 levels (one transmitter input is high, the other is low). Each transmitter is loaded with 3kΩ in parallel with 2500pF. The transmitter outputs are well behaved, with no ringing or undesirable transients as they come out of shutdown.

Driving Multiple Receivers

Each transmitter is designed to drive a single receiver. Transmitters can be paralleled to drive multiple receivers.

EIA/TIA-562 Receivers

All 5 receivers are identical and accept EIA/TIA-562 or EIA/TIA-232 signals. The CMOS receiver outputs swing between V_{CC} and GND. They are inverting, maintaining compatibility with the driver outputs.

The guaranteed 0.8V and 2.4V receiver input thresholds are significantly tighter than the ±3.0V thresholds required by the EIA/TIA-562 specification. This allows the receiver inputs to respond to TTL/CMOS logic levels as well as EIA/TIA-562/232 levels. Also, the MAX562's guaranteed 0.8V lower threshold ensures that receivers shorted to ground will have a logic 1 output. The 5kΩ input resistance to ground ensures that a receiver with its input left open will also have a logic 1 output.

The receiver inputs have approximately 0.3V hysteresis when $\overline{SHDN}$ is high. This provides clean output transitions, even with slowly moving input signals with moderate noise and ringing.

The receivers are active when EN is high. When EN is low, the receiver outputs are high impedance. This allows wire-OR connection of two EIA/TIA-562 ports (or ports of different types) at the UART.

The receivers are always active,when EN is high, irrespective of $\overline{SHDN}$'s state. When $\overline{SHDN}$ is high, the receivers have hysteresis and experience the shortest propagation delays (typically 100ns falling, 250ns rising). When $\overline{SHDN}$ is low, the receivers have longer propagation delays (typically 3µs falling, 2µs rising) and have no hysteresis. The receiver outputs are not valid for 50µs after $\overline{SHDN}$ goes low.

Shutdown and Enable Control

$\overline{SHDN}$ and EN determine the operation of the MAX562 as shown in Table 1.

Applications Information

Capacitor Selection

The capacitor type is not critical for proper MAX562 operation. Any low cost ceramic capacitor (e.g., Z5U, Y5V) is acceptable for operating at room temperature,

Table 1. MAX562 Control Pin Configurations

$\overline{SHDN}$	EN	CHARGE-PUMP OPERATION STATUS	TRANSMITTERS T1-T3	RECEIVERS R1-R5	SUPPLY CURRENT TYP (A)
0	0	Shutdown	High-Z	High-Z	1µ
0	1	Shutdown	High-Z	Active*	45µ
1	0	Normal Operation	Active	High-Z	24m
1	1	Normal Operation	Active	Active	24m

* Active, but with reduced performance (see *EIA/TIA-562 Receivers* section). This is “keep-awake” mode.

Table 2. Summary of EIA/TIA-232E/V.28 and EIA/TIA-562 Specifications

PARAMETER	CONDITION	EIA/TIA-232E/V.28 SPECIFICATION	EIA/TIA-562 SPECIFICATION
Driver Output Voltage 0 Level	3kΩ to 7kΩ load	5.0V to 15.0V	3.7V to 13.2V
1 Level		-5.0V to -15.0V	-3.7V to -13.2V
Maximum Output Level	No load	±25V	±13.2V
Signal Rate ($3k\Omega \le R_L \le 7k\Omega$)	C_L = 2500pF	Up to 20kbps	Up to 20kbps
	C_L = 1000pF	Not defined	Up to 64kbps

and X7R ceramic capacitors are recommended for operation over the full temperature range.

Larger capacitors may be used for C2 and C4 (see *Typical Operating Circuit*) to reduce ripple on the transmitter output voltages.

Power-Supply Decoupling

In applications that are sensitive to power-supply noise, decouple V_{CC} to ground with a capacitor similar in value to that of the C1A and C1B charge-pump capacitors. Connect the bypass capacitor as close as possible to the V_{CC} and GND pins.

V+ and V- as Power Supplies

A small amount of power can be drawn from V+ and V-. Excessive loads will cause V+ and V- to fall out of regulation. When V+ or V- are loaded, check for good regulation over the intended operating temperature range.

Chip Topography

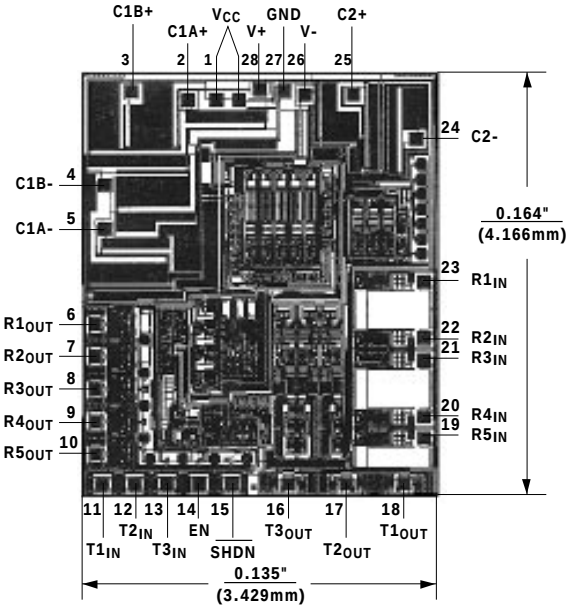

Substrate connected to V+

Transistor count: 1892

Maxim cannot assume responsibility for use of any circuitry other than circuitry entirely embodied in a Maxim product. No circuit patent licenses are implied. Maxim reserves the right to change the circuitry and specifications without notice at any time.

© 1993 Maxim Integrated Products Printed USA MAXIM is a registered trademark of Maxim Integrated Products.

Looking for pricing, stock, or lifecycle information?

Click below to explore more details on WIN SOURCE:

- View MAX562CAI-T on WIN SOURCE
- Maxim Integrated Information

Optimize Your Supply Chain with WIN SOURCE Solutions

- Global Sourcing Solution
- Obsolete Management
- Cost Control Management
- Shortage Management
- Alternative Solution
- Excess Inventory Management