THE DATASHEET OF

SS5200B

www.win-source.net 0086-755-83957316

NextGen Components,Inc.

PART CODE: SMBSS5200S5200

SPECIFICATION SHEET

SPECIFICATION SHEET NO.	N1230- SMBSS5200S5200
DATE	Dec.30, 2021
REVISION	A0
DESCRIPITION	SMD Schottky Barrier Rectifier, 2 Pads, SMB series, SS5200B Type Reverse Voltage 200V Max. Forward Current 5.0A Max. Operating Temp. Range -50°C ~+150°C, Package in Tape/Reel, 3000pcs/Reel RoHS/RoHS III compliant
CUSTOMER	
CUSTOMER PART NUMBER	
CROSS REF. PART NUMBER	
ORIGINAL PART NUMBER	MDD SS5200B
PART CODE	SMBSS5200S5200

VENDOR APPROVE
Issued/Checked/Approved NextGen Components, Inc. Mandy Xu NextGen Components, Inc. Ruby Zhang NextGen Components, Inc. Jack Zhang
DATE: Dec.30, 2021

CUSTOMER APPROVE
DATE:

NextGen Components, Inc. sales@NextGenComponent.com www.NextGenComponent.com

NextGen Components,Inc.

PART CODE: **SMBSS5200S5200**

SMD SCHOTTKY BARRIER RECTIFIER SMB SERIES

MAIN FEATURE

- The plastic package carries Underwriters Laboratory Flammability Classification 94V-0
- Low reverse leakage
- Built-in strain relief
- Low power loss, high efficiency
- High forward surge current capability
- High temperature soldering guaranteed: 250℃/ 10 seconds at terminals
- Metal silicon junction, majority carrier conduction

APPLICATION

- For surface mounted applications

RFQ

Request For Quotation

PART CODE GUIDE

SMB	SS5200	S	5200
1	2	3	4

1) **SMB:** SMD Schottky Barrier Rectifier, 2 Pads, Package SMB series

2) **SS5200**: Type code for original part number SS5200B

3) **S**: Package code, Tape/reel, 3000pcs/reel.

4) **5200:** Specification code for Reverse Voltage 200V Max. Forward Current 5.0A Max.

SMD SCHOTTKY BARRIER RECTIFIER SMB SERIES

DIMENSION (Unit: Inch/mm)

Image for reference



Marking: SS5200B

SMB/DO-214AA

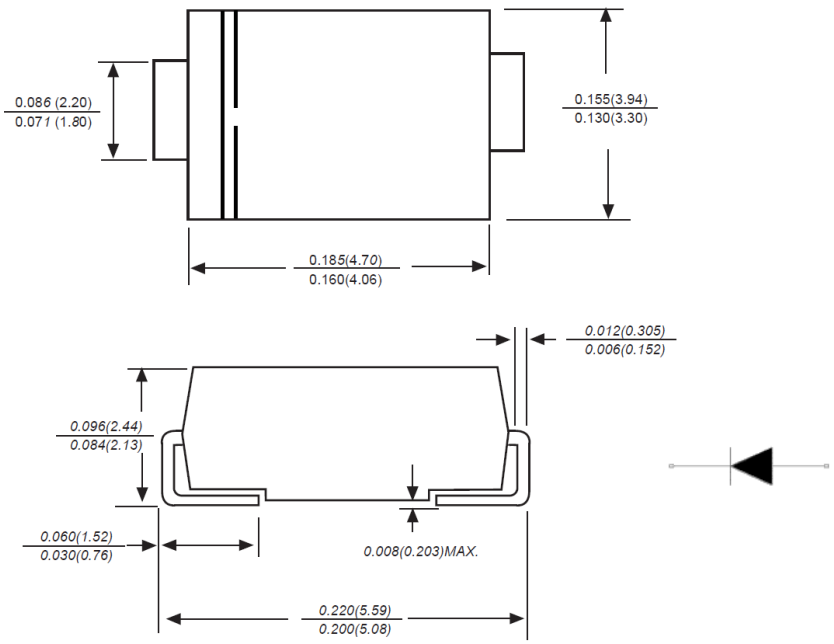

Recommend Pad Layout

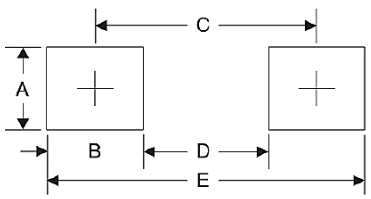

Symbol	Unit (inch)	Unit (mm)
A	0.110	2.80
B	0.094	2.40
C	0.181	4.60
D	0.086	2.20
E	0.276	7.00

SMD SCHOTTKY BARRIER RECTIFIER SMB SERIES

MECHANICAL DATA

Case	Terminals	Polarity	Mounting Position	Weight per piece
JEDEC SMB/DO-214AA molded plastic body	Solder plated, Solderable per MIL-STD-750, Method 2026	Polarity symbol marking on case	Any	0.0030 Ounce, 0.0850 grams

MAX. RATING & CHARACTERISTICS

Parameter		SYMBOLS	VALUE			UNITS
			Min.	Typical	Max.	
Repetitive peak reverse voltage		V_{RRM}			200	Volts
RMS voltage		V_{RMS}			140	Volts
DC blocking voltage		V_{DC}			200	Volts
Average forward output rectified current at TL (see fig.1)		I_{AV}			5.0	A
Peak forward surge current 8.3ms single half sine-wave superimposed on rated load (JEDEC Method)		I_{FSM}		150		A
Instantaneous forward voltage at 5.0A		V_F			0.85	Volts
DC reverse current at rated DC blocking voltage	**TA=25℃**	I_R			0.3	mA
	TA=125℃				25	mA
Junction capacitance (NOTE 2)		C_J		300		pF
Thermal resistance (Note 3)		$R_{\theta JA}$		50.0		°C/W
Operating junction temperature range		T_J	-50		+150	°C
Storage temperature range		T_{STG}	-50		+150	°C

Note

1. Ratings at 25 C ambient temperature unless otherwise specified. Single phase half-wave 60Hz, resistive or inductive load, for capacitive load current derate by 20%.
2. Measured at 1.0MHz and applied reverse voltage of 4.0Voltage
3. P.C.B. mounted with 0.2x0.2”(5.0x5.0mm) copper pad areas.

RELIABILITY

Number	Experiment Items	Experiment Method And Conditions	Reference Documents
1	Solder Resistance Test	Test 250°C± 5°C for 10 ± 2 sec. Immerse body into solder 1/16" ± 1/32"	MIL-STD-750D METHOD-2031.2
2	Solderability Test	230°C ±5°C for 5 sec.	MIL-STD-750D METHOD-2026.1 0
3	Pull Test	1 kg in axial lead direction for 10 sec.	MIL-STD-750D METHOD-2036.4
4	Bend Test	0.5Kg Weight Applied To Each Lead, Bending Arcs 90 °C ± 5 °C For 3 Times	MIL-STD-750D METHOD-2036.4
5	High Temperature Reverse Bias Test	T_A=100°C for 1000 Hours at V_R=80% Rated V_R	MIL-STD-750D METHOD-1038.4
6	Forward Operation Life Test	TA=25°C Rated Average Rectified Current	MIL-STD-750D METHOD-1027.3
7	Intermittent Operation Life Test	On state: 5 min with rated IRMS Power Off state: 5 min with Cool Forced Air. On and off for 1000 cycles.	MIL-STD-750D METHOD-1036.3
8	Pressure Cooker Test	15 PSIG, T_A=121°C, 4 hours	MIL-S-19500 APPENOIXC
9	Temperature Cycling Test	-55°C~+125°C; 30 Minutes For Dwelled Time 5 minutes for transferred time. Total: 10 cycles.	MIL-STD-750D METHOD-1051.7
10	Thermal Shock Test	0°C for 5 minutes., 100°C for 5minutes, Total: 10 cycles	MIL-STD-750D METHOD-1056.7
11	Forward Surge Test	8.3ms Single Sale Sine-wave One Surge.	MIL-STD-750D METHOD-4066.4
12	Humidity Test	T_A=65°C, RH=98% for 1000 hours.	MIL-STD-750D METHOD-1021.3
13	High Temperature Storage life Test	150°C for 1000 Hours	MIL-STD-750D METHOD-1031.5

SUGGESTED REFLOW PROFILE (For Reference Only)

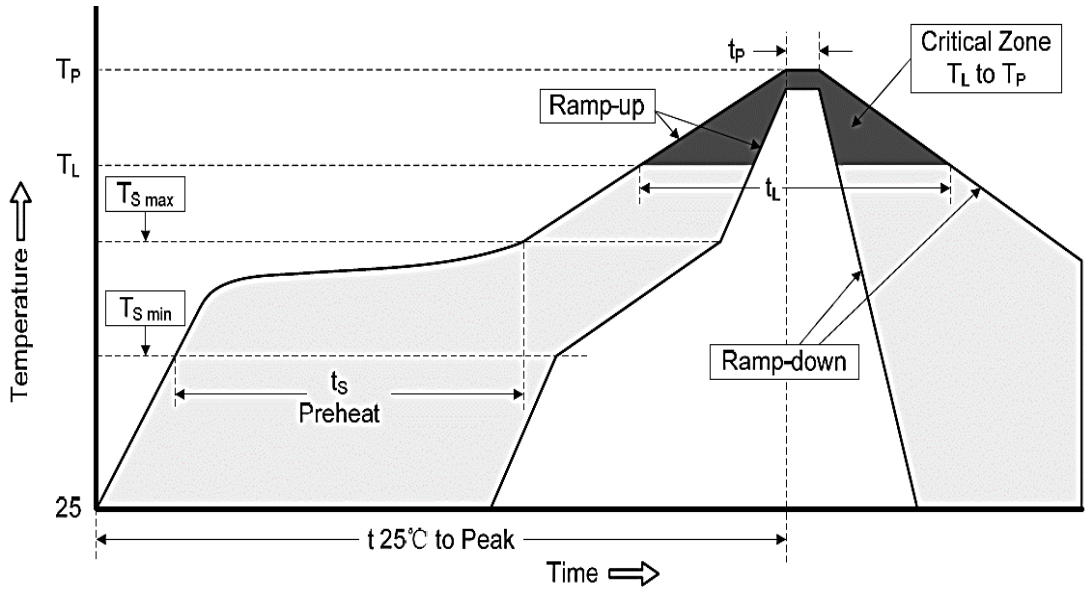

Profile Feature		Pb-Free Assembly
Average Ramp-up Rate (Ts Max to Tp)		3℃/second Max
Preheat	**Temperature Min (Ts Min.)**	150℃
	Temperature Max (Ts Max.)	200℃
	Time (ts Min. to ts Max.)	60 ~ 180 seconds
Time maintained above	**Temperature (TL)**	217℃
	Time (tL)	60 ~ 150 seconds
Peak/Classification Temperature (Tp)		250 ℃
Time within 5℃ of actual Peak Temperature (tp)		10 seconds
Ramp-down rate		6 ℃ /Second Max.
Time 25 ℃ to Peak Temperature		6 minutes Max.
Suggest reflow times		3 Times Max.

RATINGS AND CHARACTERISTIC CURVES (For Reference Only)

Fig.1 Forward Current Derating Curve

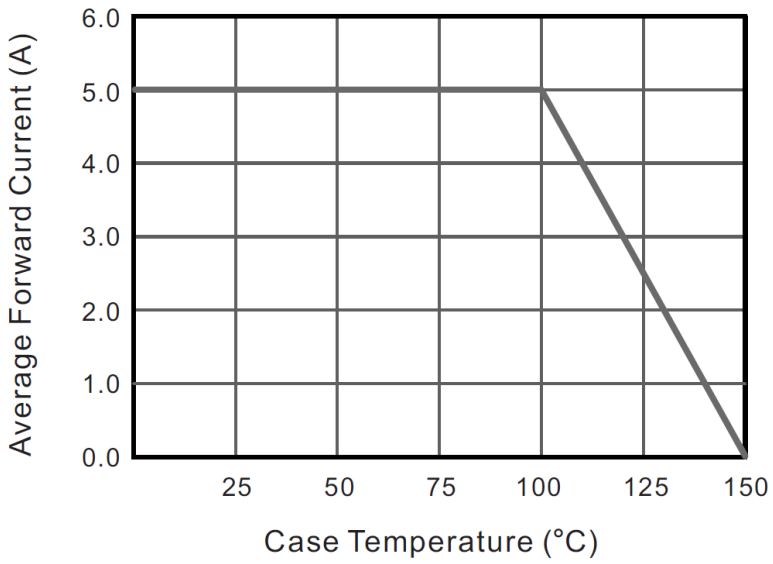

Fig.2 Typical Reverse Characteristics

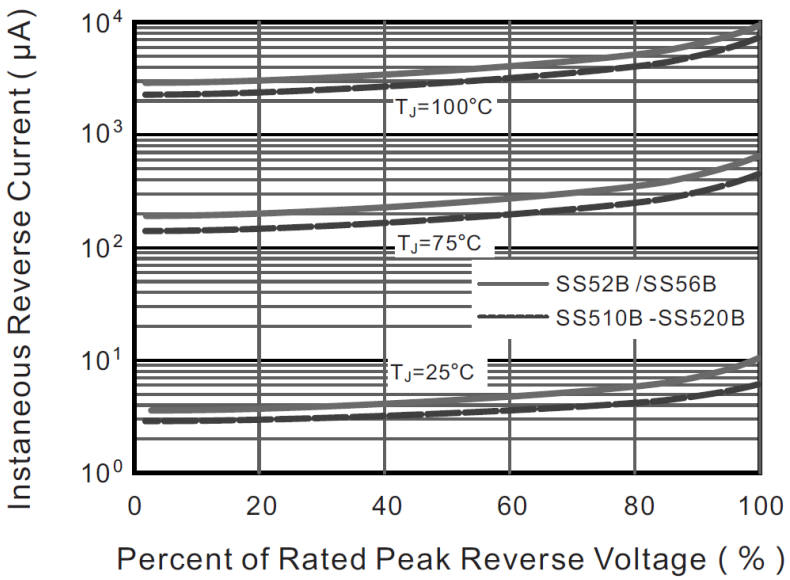

RATINGS AND CHARACTERISTIC CURVES (For Reference Only)

Fig.3 Typical Forward Characteristic

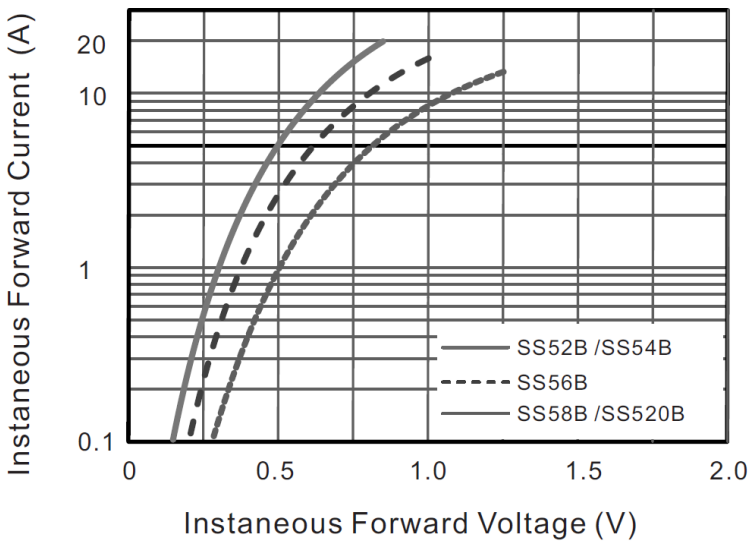

Fig.4 Typical Junction Capacitance

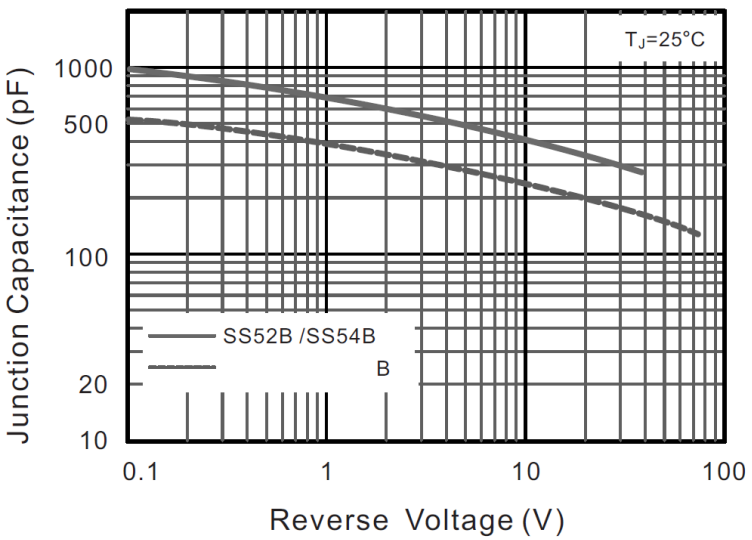

RATINGS AND CHARACTERISTIC CURVES (For Reference Only)

Fig.5 Maximum Non-Repetitive Peak Forward Surage Current

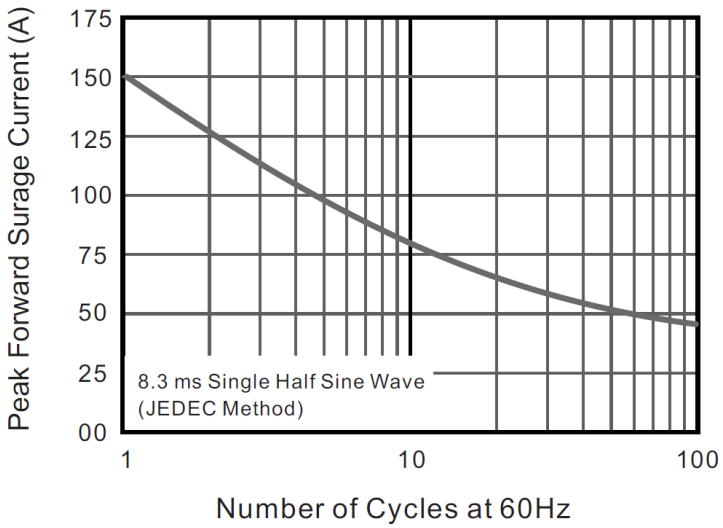

Fig.6- Typical Transient Thermal Impedance

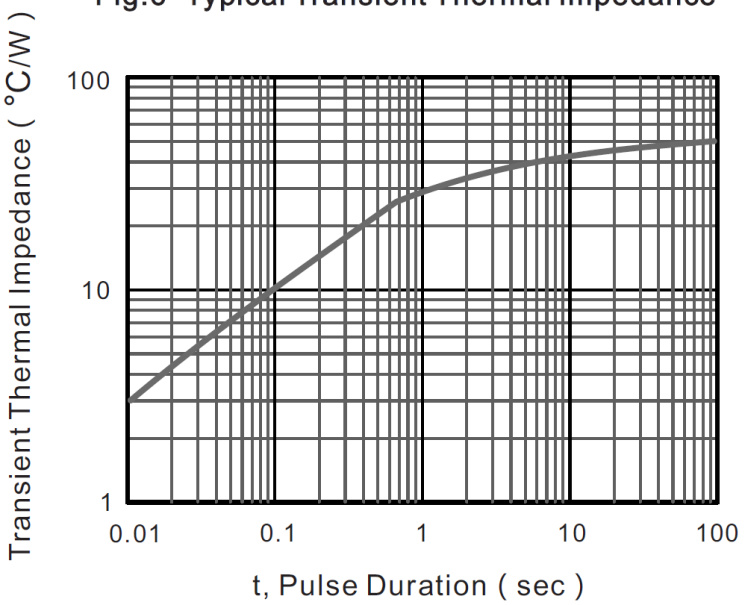

TAPE/REEL (Unit: mm)

All Devices are packed in accordance with EIA standard RS-481-A and specifications.

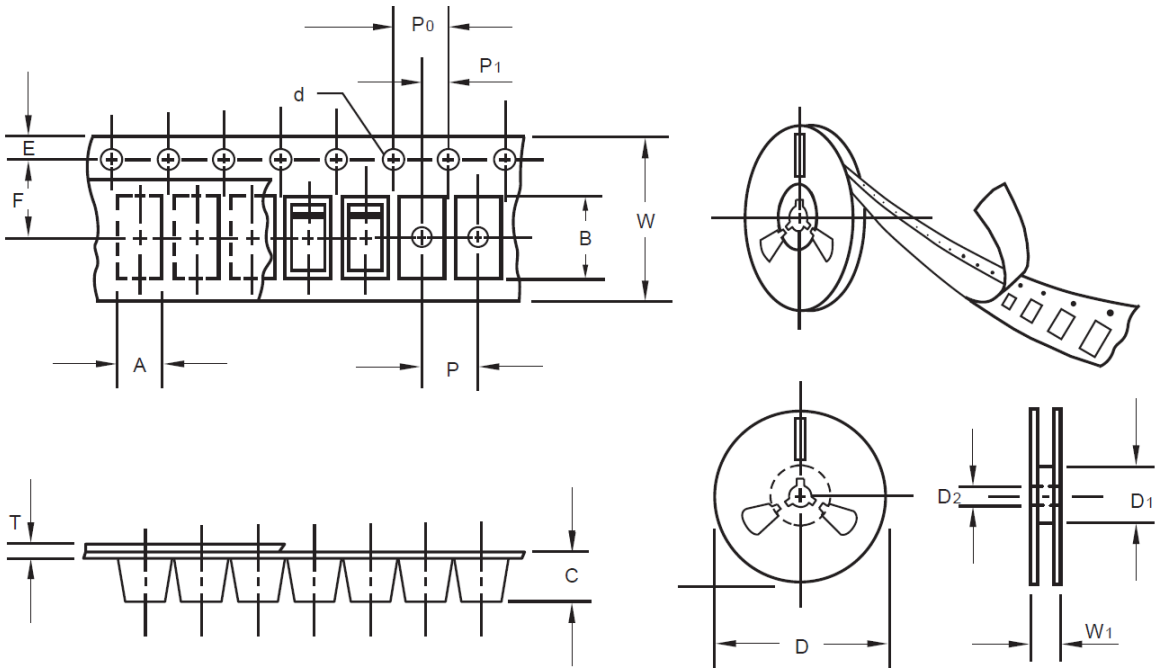

Item	Symbol	Tolerance	SMB/DO-214AA
Carrier width	A	0.1	3.81
Carrier Length	B	0.1	5.41
Carrier Depth	C	0.1	2.42
Sprocket hole	d	0.05	1.50
13”Reel outside diameter	D	2.0	330.00
13”Reel inner diameter	D1	Min.	50.00
7”Reel outside diameter	-	-	-
7”Reel inner diameter	-	-	-
Feed hole diameter	D2	0.5	13.00
Sprocket hole position	E	0.1	1.75
Punch hole position	F	0.1	5.55
Punch hole pitch	P	0.1	8.00
Sprocket hole pitch	P0	0.1	4.00
Embossment center	P1	0.1	2.00
Overall tape thickness	T	0.1	0.30
Tape width	W	0.3	12.00
Reel width	W1	1.0	12.30

PACKAGE For Reference

Case Code	SMB
Reel Size	13”
Reel Size	330 mm
MPQ/Reel	3000 pcs
Qty. /Box	6000 pcs
G.W/Box	6 lbs

DISCLAIMER

NextGen Component, Inc. reserves the right to make changes to the product(s) and or information contained herein without notice. No liability is assumed as a result of their use or application. No rights under any patent accompany the sale of any such product(s) or information

Looking for pricing, stock, or lifecycle information?

Click below to explore more details on WIN SOURCE:

- View SS5200B on WIN SOURCE
- MDD Information

Optimize Your Supply Chain with WIN SOURCE Solutions

- Global Sourcing Solution
- Obsolete Management
- Cost Control Management
- Shortage Management
- Alternative Solution
- Excess Inventory Management