LR745

High-Input Voltage SMPS Start-up

Features

- Accepts inputs from 35 to 450V
- Output current limiting
- For PWM ICs with start-up threshold voltage of 13.9 - 18.0V
- Very low power consumption after start-up

Applications

- Notebook and laptop computers
- Telecommunication power supplies
- Battery chargers
- Motor controllers

Description

LR745 is a high input voltage SMPS start-up circuit. LR745 is ideally suited for use with industry standard low-voltage, Pulse-Width Modulation (PWM) ICs having start thresholds of 13.9 to 18.0V. It allows the PWM ICs to be operated from rectified 120 or 240VAC lines, and eliminates the use of power resistors often used for this purpose.

The internal circuitry of the LR745 allows the PWM ICs to operate at a V_{CC} voltage below their start-threshold voltage after start-up. The auxiliary voltage can be less than the start-threshold voltage, which allows for improved efficiency. Current from the high voltage line is drawn only during the start-up period. After start-up, the internal, high-voltage line is disconnected from the IC, thereby reducing the continuous power dissipation to a minimum.

© 2015 Microchip Technology Inc.

Package Type

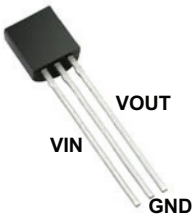

TO-92

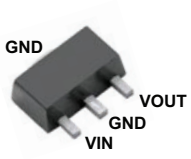

TO-243AA (SOT-89)

See Table 2-1 for pin information

© 2015 Microchip Technology Inc.

1.0 ELECTRICAL CHARACTERISTICS

ABSOLUTE MAXIMUM RATINGS

Input Voltage 450V
Output voltage 25V
Operating and storage temperature ..... -55°C to +150°C

Note: Stresses above those listed under “Absolute Maximum Ratings” may cause permanent damage to the device. This is a stress rating only and functional operation of the device at those or any other conditions, above those indicated in the operational listings of this specification, is not implied. Exposure to maximum rating conditions for extended periods may affect device reliability.

1.1 ELECTRICAL SPECIFICATIONS

TABLE 1-1: ELECTRICAL CHARACTERISTICS[1]

Symbol	Parameter	Min	Typ	Max	Units	Conditions
V_{OUT}	Output voltage	18.0		24	V	I_{OUT}= 0
	V_{OUT} over temperature	17.7		24.3	V	I_{OUT}= 0, T_A= -40°C to +85°C
I_{OUT}	Output current limiting	2.0	3.0	4.0	mA	
V_{IN}	Operating input voltage range	35		450	V	
I_{INQ}	Input quiescent current			500	µA	V_{IN}= 400V, I_{OUT}= 0
V_{OFF}	Output turn off voltage	12.6	13.25	13.9	V	
	V_{OFF} over temperature	12.3	13.25	14.2	V	T_A= -40°C to +85°C
V_{RESET}	Output reset voltage	6.3	7.0	7.7	V	
	V_{RESET} over temperature	6.0	7.0	8.0	V	T_A= -40°C to +85°C
I_{OFF}	V_{IN} off-state leakage current			75	µA	V_{IN}= 400V
V_{AUX}	External voltage applied to V_{OUT}			22	V	
I_{AUX}	Input current applied to V_{OUT}			500	µA	V_{AUX}= 22V

1 Test Conditions unless otherwise specified: T_A = 25°C, V_{IN} = 450V

TABLE 1-2: THERMAL CHARACTERISTICS

Package	θja
TO-92	132°C/W
TO-243AA (SOT-89)	133°C/W

2.0 PIN DESCRIPTION

The locations of the pins are listed in Package Type.

TABLE 2-1: PIN DESCRIPTION

Function	Description
VIN	Regulator input. 8 - 450V.
GND	Ground return for all internal circuitry. This pin must be electrically connected to circuit common.
VOUT	Regulator output.

© 2015 Microchip Technology Inc.

3.0 APPLICATION INFORMATION

Figure 3-1 shows a simplified typical configuration of a switch mode power supply, SMPS, using LR745 in the start-up circuit.

LR745's VOUT terminal is connected to the VCC line of a PWM IC. An auxiliary winding on the transformer generates a V_{CC} voltage to power the PWM IC after start-up. LR745 supplies power for the PWM IC only during start-up. After start-up, LR745 turns off and the auxiliary winding supplies power for the PWM IC. Figure 3-2 shows the typical current and voltage waveforms at various stages from power-up to operation powered by the auxiliary winding.

3.1 Stage I

Once a voltage is applied on VIN, LR745 starts to charge the V_{CC} capacitor, C_1. The V_{CC} voltage starts to increase at a rate limited by the internal current limiter of 3.0mA. The PWM IC is in its start-up condition and will typically draw 0.5mA from the V_{CC} line. The V_{CC} voltage will continue to increase until it reaches the PWM IC's start threshold voltage, typically 16V.

3.2 Stage II

Once V_{CC} reaches 16V, the PWM IC is in its operating condition and will typically draw 20mA, depending on the operating frequency and size of the switching metal–oxide–semiconductor field-effect transistor (MOSFET). The output of LR745, V_{OUT}, is internally current limited to 3.0mA. The remaining 17mA will be supplied by C_1, causing the V_{CC} voltage decrease. When V_{CC} decreases to 13.25V, LR745 will turn off its output, thereby reducing its input current from 3.0mA to 10s of microamperes. At this point, all 20mA will be supplied by C_1. The PWM IC can now operate to a minimum V_{CC} voltage, typically 10V.

Once the switching MOSFET starts operating, the energy in the primary winding is transferred to the secondary outputs and the auxiliary winding, thereby building up V_{AUX}. It is necessary to size the V_{CC} storage capacitor, C_1, such that V_{AUX} increases to a voltage greater than 10V before V_{CC} decreases to 10V. This allows V_{AUX} to supply the required operating current for the PWM IC.

If for some reason the auxiliary voltage does not reach 10V, V_{CC} will continue to decrease. Once V_{CC} goes below 10V, the PWM IC will return to its start-up condition. The PWM IC will now only draw 0.5mA. V_{CC} will continue to decrease but at a much slower rate. Once V_{CC} decreases below 7.0V, LR745 will turn the output, V_{OUT}, back on. V_{OUT} will start charging C_1 as described in Stage I.

3.3 Stage III

At this stage, LR745 output is turned off and the PWM IC is operating from the V_{AUX} supply. The auxiliary voltage, V_{AUX}, can be designed to vary anywhere between the minimum operating V_{CC} voltage of the PWM IC (10V) to the maximum auxiliary voltage rating of the LR745 (22V).

FIGURE 3-1: SIMPLIFIED SMPS USING LR745

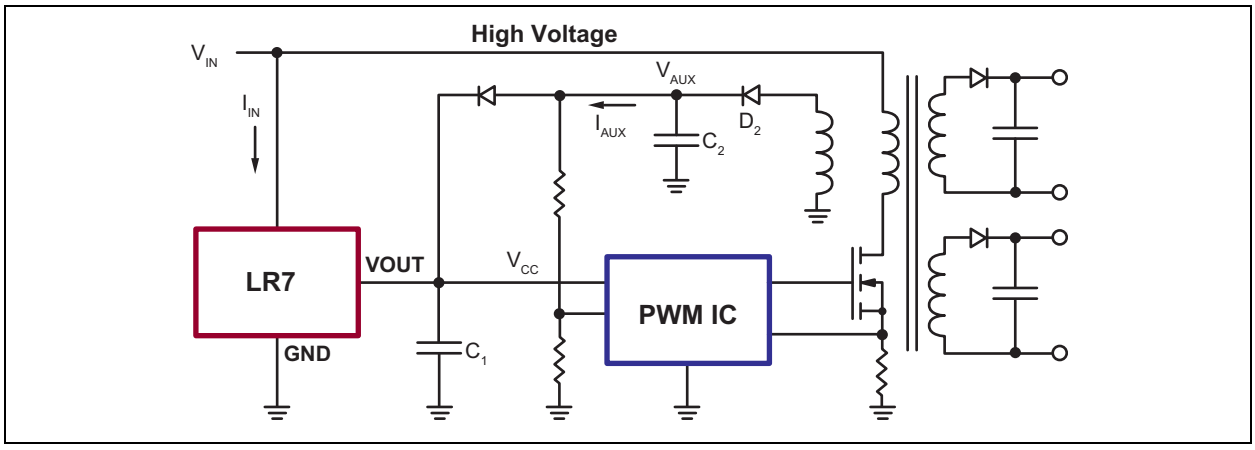

FIGURE 3-2: START-UP WAVEFORMS

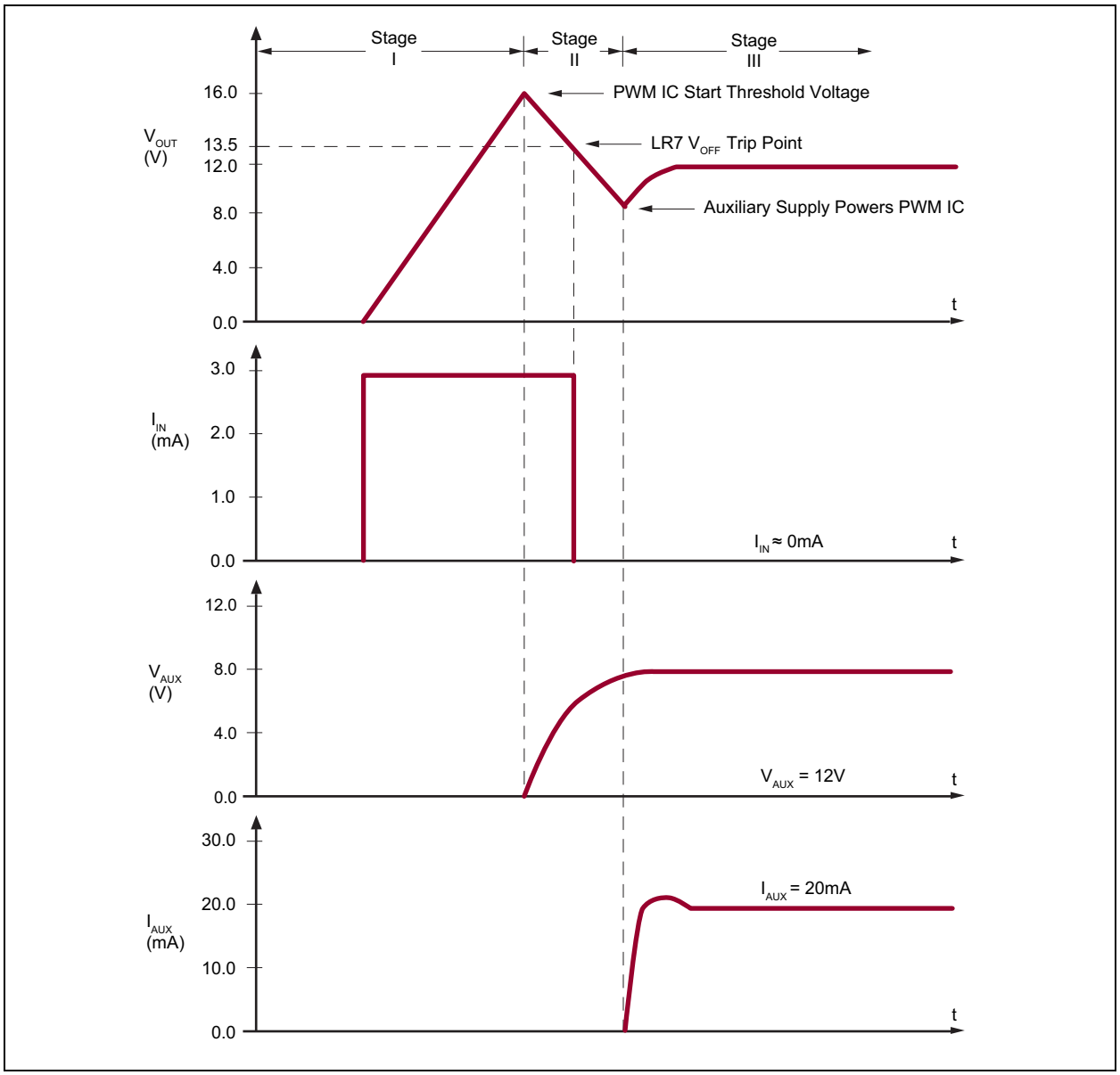

© 2015 Microchip Technology Inc.

3.4 Block Diagram

FIGURE 3-3: BLOCK DIAGRAM

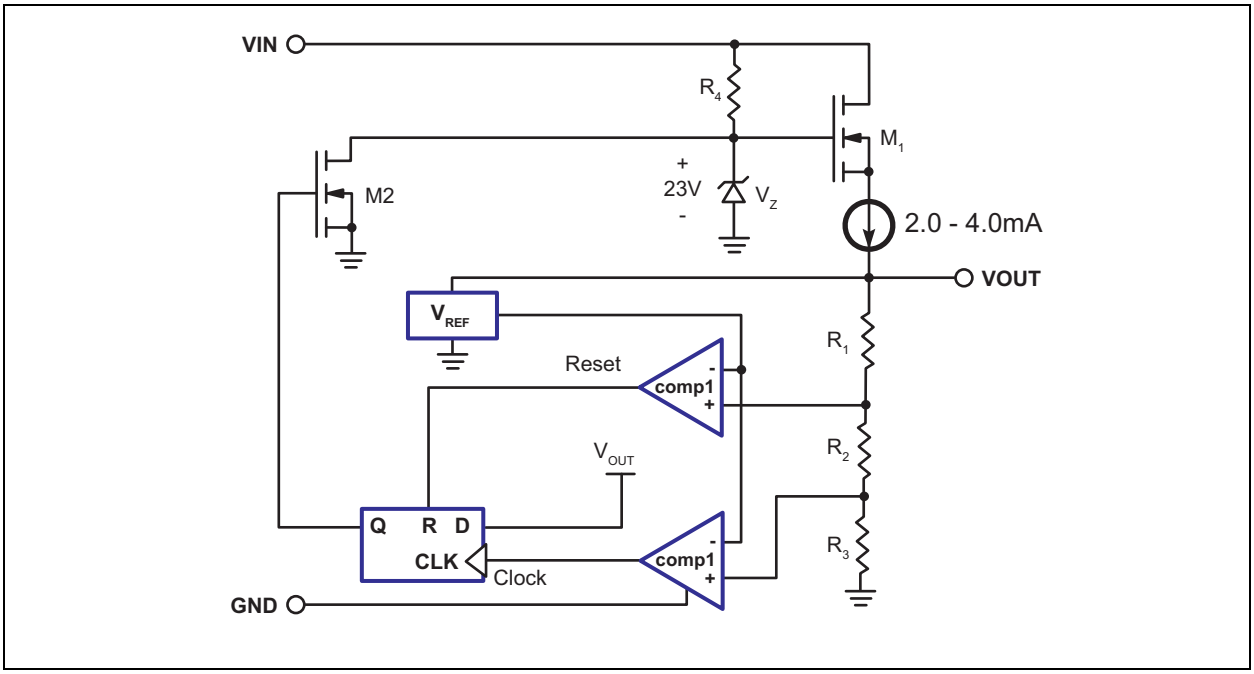

LR745 is a high voltage, switch-mode power supply start-up circuit which has 3 terminals: VIN, GND, and VOUT. An input voltage range of 35 - 450V DC can be applied directly at the input VIN pin. The output voltage, V_{OUT}, is monitored by the 2 comparators: comp1 and comp2. An internal reference, V_{REF}, and resistor divider R1, R2, and R3set the nominal V_{OUT} trip points of 7.0V for comp1 and 13.25V for comp2.

When a voltage is applied on VIN, V_{OUT} will start to ramp up from 0V. When V_{OUT} is less than 7.0V, the output of comp1 will be at a logic high state, keeping the D flip-flop in a reset state. The output of the D flip-flop, Q, will be at logic low keeping transistor M_2 off. The data input for the D flip-flop, D, is internally connected to a logic high. As V_{OUT} becomes greater than 7.0V, comp1 will change to a logic low state. V_{OUT} will continue to increase, and the constant current source, typically 3.0mA output, will charge an external storage capacitor. As V_{OUT} reaches above 13.25V, the output of comp2 will then switch from a logic high to a logic low state. The D flip-flop's output does not change state since its clock input is designed to trigger only on a rising edge, logic low to logic high transition. When there is no load connected to the output, the output voltage will continue to increase until it reaches 21.5V, which is the Zener voltage minus the threshold voltage of transistor M_1. The Zener voltage is typically 23V, and the threshold voltage of M_1 is typically 1.5V. The Zener diode is biased by resistor R_4.

V_{OUT} will start to decrease when it is connected to an external load greater than the internal constant current source, which is the case when the PWM IC starts up. When V_{OUT} falls below 13.25V, the output of comp2 will switch from a logic low to a logic high. The output of comp2 will clock in a logic 1 into the D flip-flop, causing the D flip-flop's output, Q, to switch from a logic low to a logic high. Transistor M_2 will then be turned on pulling the gate of transistor M_1 to ground, thereby turning transistor M_1 off. Transistor M_1 will remain off as long as VOUT is greater than 7.0V. Once V_{OUT} decreases below 7.0V, comp1 will reset the D flip-flop, thereby turning transistor M_2 off and transistor M_1 back on.

© 2015 Microchip Technology Inc.

4.0 DESIGN CONSIDERATIONS

To ensure the best design using LR745, evaluate the value of C_1 and the SMPS requirements.

4.1 Calculating the value for C_1

Sizing the V_{CC} capacitor, C_1, is an important factor. Making C_1 too large will cause the SMPS to power up too slowly. However, if too small, C_1 will not allow the SMPS to power up due to insufficient charge in the capacitor to power the IC and MOSFET until the auxiliary supply is available. The value of C_1 can be approximated by the following equation:

$$C_1 = \frac{\left[\frac{1}{f}\right] \bullet N \bullet 1}{V_{START} - V_{MIN}}$$

Definitions:

- f = switching frequency
- N = number of clock cycles required to charge V_{AUX} to V_{MIN} value
- I = PWM operating current
- V_{START} = PWM IC start threshold rating
- V_{MIN} = PWM IC minimum V_{CC} operating voltage

Consider for example, a PWM IC with a switching frequency of 100KHz, operating current of 20mA, start threshold of 16V, and a minimum operating voltage of 10V. If 100 clock cycles are required to charge the auxiliary voltage to 10V, the minimum value of C_1 is calculated as follows:

$$C_1 = \frac{\left[\frac{1}{100kHz}\right] \bullet 100 \bullet 20mA}{16V - 10V}$$

$$C_1 = 3.3\mu F$$

4.2 SMPS with wide minimum to maximum load

An important point is that the LR745's output voltage, V_{OUT}, must discharge to below the nominal V_{OFF} trip point of 13.25V in order for its output to turn off. If the SMPS requires a wide minimum to maximum output load variation, it will be difficult to guarantee that V_{CC} will fall below 13.25V under minimum load conditions. Consider an SMPS that is required to power small as well as large loads and is also required to power up quickly. Such a SMPS may power up too fast with a small load, not allowing the V_{CC} voltage to fall below 13.25V. For such conditions, the circuit in Figure 4-1 is recommended.

In Figure 4-1, the V_{REF} pin of the UC3844 is used to bias the ground pin of the LR745. The V_{REF} pin on the UC3844 is a 5.0V reference, which stays at 0V until the V_{CC} voltage reaches the start threshold voltage. Once V_{CC} reaches the start threshold voltage, V_{REF} will switch digitally from 0V to 5.0V. During start-up, the LR745 will be on, and V_{CC} will start to increase up to 16V. Once V_{CC} reaches16V, the UC3844 will start to operate and V_{REF} will increase from 0V to 5.0V. The LR745 will see an effective V_{OUT} voltage of 11V (16V minus 5.0V) because the ground of the LR745 is now at 5.0V. The LR745 will immediately turn off its output, VOUT, without having to wait for the V_{CC} voltage to decrease. The V_{REF} switching from 0 to 5.0V during start is a common feature in most PWM ICs.

FIGURE 4-1: USING V_{REF} FOR GROUND VOLTAGE

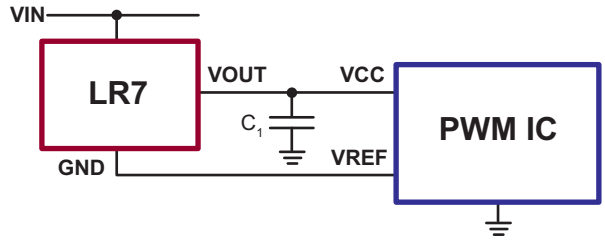

© 2015 Microchip Technology Inc.

5.0 PACKAGING INFORMATION

5.1 Package Marking Information

3-lead TO-92

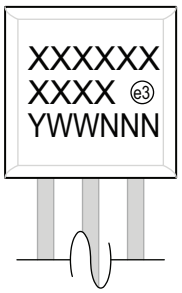

Example

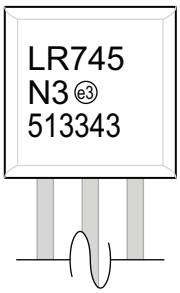

3-lead TO-243AA *
(SOT-89)

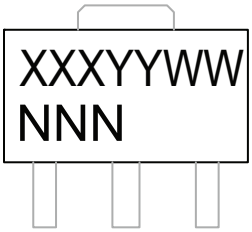

Example

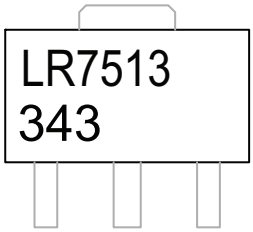

Legend:	XX...X	Product Code or Customer-specific information
	Y	Year code (last digit of calendar year)
	YY	Year code (last 2 digits of calendar year)
	WW	Week code (week of January 1 is week ‘01’)
	NNN	Alphanumeric traceability code
	(e3)	Pb-free JEDEC® designator for Matte Tin (Sn)
	*	This package is Pb-free. The Pb-free JEDEC designator ((e3)) can be found on the outer packaging for this package.

Note: In the event the full Microchip part number cannot be marked on one line, it will be carried over to the next line, thus limiting the number of available characters for product code or customer-specific information. Package may or not include the corporate logo.

3-Lead TO-243AA (SOT-89) Package Outline (N8)

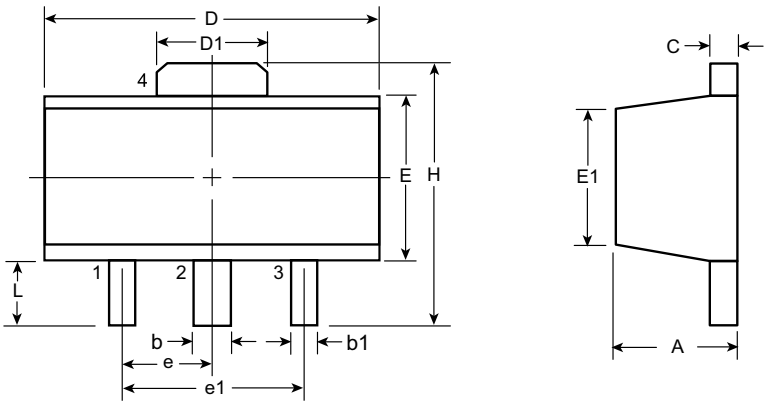

Top View **Side View**

Note: For the most current package drawings, see the Microchip Packaging Specification at www.microchip.com/packaging.

Symbol		A	b	b1	C	D	D1	E	E1	e	e1	H	L
Dimensions (mm)	MIN	1.40	0.44	0.36	0.35	4.40	1.62	2.29	2.00†	1.50 BSC	3.00 BSC	3.94	0.73†
	NOM	-	-	-	-	-	-	-	-			-	-
	MAX	1.60	0.56	0.48	0.44	4.60	1.83	2.60	2.29			4.25	1.20

JEDEC Registration TO-243, Variation AA, Issue C, July 1986.
† This dimension differs from the JEDEC drawing
Drawings not to scale.

© 2015 Microchip Technology Inc.

3-Lead TO-92 Package Outline (L/LL/N3)

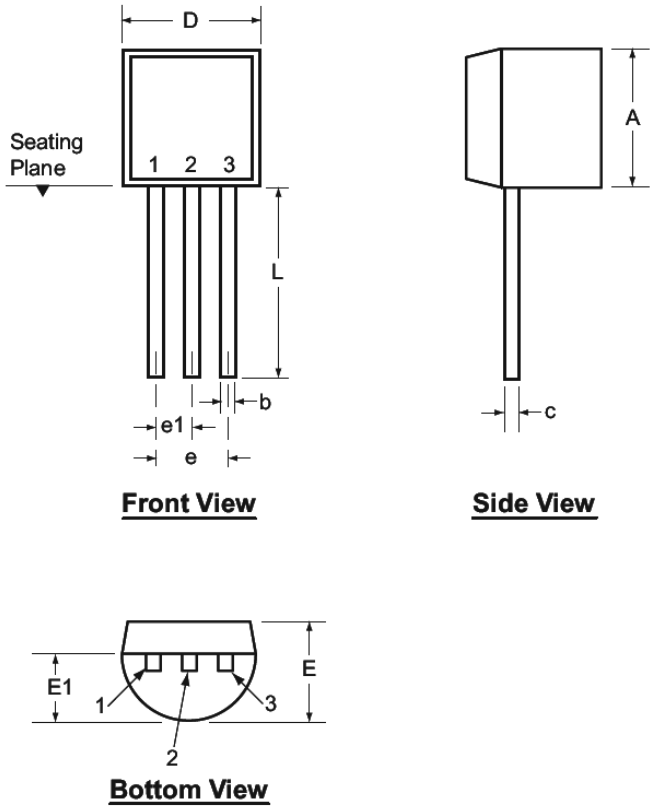

Note: For the most current package drawings, see the Microchip Packaging Specification at www.microchip.com/packaging.

Symbol		A	b	c	D	E	E1	e	e1	L
Dimensions (inches)	MIN	.170	.014†	.014†	.175	.125	.080	.095	.045	.500
	NOM	-	-	-	-	-	-	-	-	-
	MAX	.210	.022†	.022†	.205	.165	.105	.105	.055	.610*

JEDEC Registration TO-92.
** This dimension is not specified in the JEDEC drawing.*
† This dimension differs from the JEDEC drawing.
Drawings not to scale.

APPENDIX A: REVISION HISTORY

Revision A (April 2015)

- Update file to new format

© 2015 Microchip Technology Inc.

PRODUCT IDENTIFICATION SYSTEM

To order or obtain information, e.g., on pricing or delivery, refer to the factory or the listed sales office.

PART NO.	XX	-	X	-	X
Device	Package Options		Environmental		Media Type

Device:	LR745	= High-Input, Voltage SMPS, Start-up/Linear Regulator
Package:	N3	= TO-92 (fixed voltage)
	N8	= TO-243AA (SOT-89) (fixed voltage)
Environmental	G	= Lead (Pb)-free/ROHS-compliant package
Media Type:	(blank)	= 1000/Bag for N3 packages = 2000/Reel for N8 packages
	P003	= 2000/Reel for N3 package
	P013	= 2000/Ammo Pack for N3 package

Examples:

a)	LR745N3-G	TO-92 package, 1000/bag
b)	LR745N3-G-P003:	TO-92 package, 2000/reel.
c)	LR745N3-G-P013:	TO-92 package, 2000/ammo pack.
d)	LR745N8-G	TO-243AA package, 2000/reel

Note the following details of the code protection feature on Microchip devices:

- Microchip products meet the specification contained in their particular Microchip Data Sheet.
- Microchip believes that its family of products is one of the most secure families of its kind on the market today, when used in the intended manner and under normal conditions.
- There are dishonest and possibly illegal methods used to breach the code protection feature. All of these methods, to our knowledge, require using the Microchip products in a manner outside the operating specifications contained in Microchip's Data Sheets. Most likely, the person doing so is engaged in theft of intellectual property.
- Microchip is willing to work with the customer who is concerned about the integrity of their code.
- Neither Microchip nor any other semiconductor manufacturer can guarantee the security of their code. Code protection does not mean that we are guaranteeing the product as "unbreakable."

Code protection is constantly evolving. We at Microchip are committed to continuously improving the code protection features of our products. Attempts to break Microchip's code protection feature may be a violation of the Digital Millennium Copyright Act. If such acts allow unauthorized access to your software or other copyrighted work, you may have a right to sue for relief under that Act.

Information contained in this publication regarding device applications and the like is provided only for your convenience and may be superseded by updates. It is your responsibility to ensure that your application meets with your specifications. MICROCHIP MAKES NO REPRESENTATIONS OR WARRANTIES OF ANY KIND WHETHER EXPRESS OR IMPLIED, WRITTEN OR ORAL, STATUTORY OR OTHERWISE, RELATED TO THE INFORMATION, INCLUDING BUT NOT LIMITED TO ITS CONDITION, QUALITY, PERFORMANCE, MERCHANTABILITY OR FITNESS FOR PURPOSE**.** Microchip disclaims all liability arising from this information and its use. Use of Microchip devices in life support and/or safety applications is entirely at the buyer's risk, and the buyer agrees to defend, indemnify and hold harmless Microchip from any and all damages, claims, suits, or expenses resulting from such use. No licenses are conveyed, implicitly or otherwise, under any Microchip intellectual property rights.

Trademarks

The Microchip name and logo, the Microchip logo, dsPIC, FlashFlex, flexPWR, JukeBlox, KEELOQ, KEELOQ logo, Kleer, LANCheck, MediaLB, MOST, MOST logo, MPLAB, OptoLyzer, PIC, PICSTART, PIC^{32} logo, RightTouch, SpyNIC, SST, SST Logo, SuperFlash and UNI/O are registered trademarks of Microchip Technology Incorporated in the U.S.A. and other countries.

The Embedded Control Solutions Company and mTouch are registered trademarks of Microchip Technology Incorporated in the U.S.A.

Analog-for-the-Digital Age, BodyCom, chipKIT, chipKIT logo, CodeGuard, dsPICDEM, dsPICDEM.net, ECAN, In-Circuit Serial Programming, ICSP, Inter-Chip Connectivity, KleerNet, KleerNet logo, MiWi, MPASM, MPF, MPLAB Certified logo, MPLIB, MPLINK, MultiTRAK, NetDetach, Omniscient Code Generation, PICDEM, PICDEM.net, PICkit, PICtail, RightTouch logo, REAL ICE, SQI, Serial Quad I/O, Total Endurance, TSHARC, USBCheck, VariSense, ViewSpan, WiperLock, Wireless DNA, and ZENA are trademarks of Microchip Technology Incorporated in the U.S.A. and other countries.

SQTP is a service mark of Microchip Technology Incorporated in the U.S.A.

Silicon Storage Technology is a registered trademark of Microchip Technology Inc. in other countries.

GestIC is a registered trademarks of Microchip Technology Germany II GmbH & Co. KG, a subsidiary of Microchip Technology Inc., in other countries.

All other trademarks mentioned herein are property of their respective companies.

© 2015, Microchip Technology Incorporated, Printed in the U.S.A., All Rights Reserved.

ISBN: 978-1-63277-243-5

QUALITY MANAGEMENT SYSTEM
CERTIFIED BY DNV
═ ISO/TS 16949 ═

Microchip received ISO/TS-16949:2009 certification for its worldwide headquarters, design and wafer fabrication facilities in Chandler and Tempe, Arizona; Gresham, Oregon and design centers in California and India. The Company's quality system processes and procedures are for its PIC® MCUs and dsPIC® DSCs, KEELOQ® code hopping devices, Serial EEPROMs, microperipherals, nonvolatile memory and analog products. In addition, Microchip's quality system for the design and manufacture of development systems is ISO 9001:2000 certified.

© 2015 Microchip Technology Inc.

Worldwide Sales and Service

AMERICAS

Corporate Office
2355 West Chandler Blvd.
Chandler, AZ 85224-6199
Tel: 480-792-7200
Fax: 480-792-7277
Technical Support:
http://www.microchip.com/support
Web Address:
www.microchip.com

Atlanta
Duluth, GA
Tel: 678-957-9614
Fax: 678-957-1455

Austin, TX
Tel: 512-257-3370

Boston
Westborough, MA
Tel: 774-760-0087
Fax: 774-760-0088

Chicago
Itasca, IL
Tel: 630-285-0071
Fax: 630-285-0075

Cleveland
Independence, OH
Tel: 216-447-0464
Fax: 216-447-0643

Dallas
Addison, TX
Tel: 972-818-7423
Fax: 972-818-2924

Detroit
Novi, MI
Tel: 248-848-4000

Houston, TX
Tel: 281-894-5983
Indianapolis

Noblesville, IN
Tel: 317-773-8323
Fax: 317-773-5453

Los Angeles
Mission Viejo, CA
Tel: 949-462-9523
Fax: 949-462-9608

New York, NY
Tel: 631-435-6000

San Jose, CA
Tel: 408-735-9110

Canada - Toronto
Tel: 905-673-0699
Fax: 905-673-6509

ASIA/PACIFIC

Asia Pacific Office
Suites 3707-14, 37th Floor
Tower 6, The Gateway
Harbour City, Kowloon

Hong Kong
Tel: 852-2943-5100
Fax: 852-2401-3431

Australia - Sydney
Tel: 61-2-9868-6733
Fax: 61-2-9868-6755

China - Beijing
Tel: 86-10-8569-7000
Fax: 86-10-8528-2104

China - Chengdu
Tel: 86-28-8665-5511
Fax: 86-28-8665-7889

China - Chongqing
Tel: 86-23-8980-9588
Fax: 86-23-8980-9500

China - Dongguan
Tel: 86-769-8702-9880

China - Hangzhou
Tel: 86-571-8792-8115
Fax: 86-571-8792-8116

China - Hong Kong SAR
Tel: 852-2943-5100
Fax: 852-2401-3431

China - Nanjing
Tel: 86-25-8473-2460
Fax: 86-25-8473-2470

China - Qingdao
Tel: 86-532-8502-7355
Fax: 86-532-8502-7205

China - Shanghai
Tel: 86-21-5407-5533
Fax: 86-21-5407-5066

China - Shenyang
Tel: 86-24-2334-2829
Fax: 86-24-2334-2393

China - Shenzhen
Tel: 86-755-8864-2200
Fax: 86-755-8203-1760

China - Wuhan
Tel: 86-27-5980-5300
Fax: 86-27-5980-5118

China - Xian
Tel: 86-29-8833-7252
Fax: 86-29-8833-7256

ASIA/PACIFIC

China - Xiamen
Tel: 86-592-2388138
Fax: 86-592-2388130

China - Zhuhai
Tel: 86-756-3210040
Fax: 86-756-3210049

India - Bangalore
Tel: 91-80-3090-4444
Fax: 91-80-3090-4123

India - New Delhi
Tel: 91-11-4160-8631
Fax: 91-11-4160-8632

India - Pune
Tel: 91-20-3019-1500

Japan - Osaka
Tel: 81-6-6152-7160
Fax: 81-6-6152-9310

Japan - Tokyo
Tel: 81-3-6880- 3770
Fax: 81-3-6880-3771

Korea - Daegu
Tel: 82-53-744-4301
Fax: 82-53-744-4302

Korea - Seoul
Tel: 82-2-554-7200
Fax: 82-2-558-5932 or
82-2-558-5934

Malaysia - Kuala Lumpur
Tel: 60-3-6201-9857
Fax: 60-3-6201-9859

Malaysia - Penang
Tel: 60-4-227-8870
Fax: 60-4-227-4068

Philippines - Manila
Tel: 63-2-634-9065
Fax: 63-2-634-9069

Singapore
Tel: 65-6334-8870
Fax: 65-6334-8850

Taiwan - Hsin Chu
Tel: 886-3-5778-366
Fax: 886-3-5770-955

Taiwan - Kaohsiung
Tel: 886-7-213-7828

Taiwan - Taipei
Tel: 886-2-2508-8600
Fax: 886-2-2508-0102

Thailand - Bangkok
Tel: 66-2-694-1351
Fax: 66-2-694-1350

EUROPE

Austria - Wels
Tel: 43-7242-2244-39
Fax: 43-7242-2244-393

Denmark - Copenhagen
Tel: 45-4450-2828
Fax: 45-4485-2829

France - Paris
Tel: 33-1-69-53-63-20
Fax: 33-1-69-30-90-79

Germany - Dusseldorf
Tel: 49-2129-3766400

Germany - Munich
Tel: 49-89-627-144-0
Fax: 49-89-627-144-44

Germany - Pforzheim
Tel: 49-7231-424750

Italy - Milan
Tel: 39-0331-742611
Fax: 39-0331-466781

Italy - Venice
Tel: 39-049-7625286

Netherlands - Drunen
Tel: 31-416-690399
Fax: 31-416-690340

Poland - Warsaw
Tel: 48-22-3325737

Spain - Madrid
Tel: 34-91-708-08-90
Fax: 34-91-708-08-91

Sweden - Stockholm
Tel: 46-8-5090-4654

UK - Wokingham
Tel: 44-118-921-5800
Fax: 44-118-921-5820

01/27/15

© 2015 Microchip Technology Inc.

Looking for pricing, stock, or lifecycle information?

Click below to explore more details on WIN SOURCE:

- View LR745N3-G-P003 on WIN SOURCE
- Microchip Technology Information

Optimize Your Supply Chain with WIN SOURCE Solutions

- Global Sourcing Solution
- Obsolete Management
- Cost Control Management
- Shortage Management
- Alternative Solution
- Excess Inventory Management