# IGLOO 2 FPGA and SmartFusion 2 SoC FPGA

## INTRODUCTION

This datasheet covers the electrical AC and DC specifications for five temperature grades of devices (part number prefixes M2GL005, M2GL010, M2GL025, M2GL050, M2GL060, M2GL090, M2GL150) and four temperature grades of devices (part number prefixes M2S005, M2S010, M2S025, M2S050, M2S060, M2S090 and M2S150). AC and DC electrical characteristics and parametric values, unless otherwise noted, apply to all the temperature grade devices. Users are expected to close timing using SmartTime for the speed and temperate grade of the device chosen.

Microchip's mainstream SmartFusion® 2 SoC and IGLOO® 2 FPGA families integrate an industry standard 4-input LookUp Table (LUT)-based FPGA fabric with integrated math blocks, multiple embedded memory blocks, and high-performance SerDes communication interfaces on a single chip. Both families benefit from low-power flash technology and are the most secure and reliable FPGAs in the industry. These next generation devices offer up to 150K Logic Elements, up to 5 MBs of embedded RAM, up to 16 SerDes lanes, up to four PCI Express Gen 2 endpoints, and integrated hard DDR3 memory controllers with error correction.

SmartFusion 2 devices integrate an entire low-power, real-time Microcontroller Subsystem (MSS) with a rich set of industry-standard peripherals including Ethernet, USB, and CAN, while IGLOO 2 devices integrate a high-performance memory subsystem with on-chip flash, 32 KB embedded SRAM, and multiple DMA controllers.

© 2026 Microchip Technology Inc. and its subsidiaries

# Contents


INTRODUCTION ..... 1
1.0 Device Status ..... 3
2.0 References ..... 4
3.0 Electrical Specifications ..... 5
3.1 Operating Conditions ..... 5
3.2 Power Consumption ..... 11
3.3 Average Fabric Temperature and Voltage Derating Factors ..... 13
3.4 Timing Model ..... 13
3.5 User I/O Characteristics ..... 15
3.6 Memory Interface and Voltage Referenced I/O Standards ..... 36
3.7 Differential I/O Standards ..... 49
3.8 I/O Register Specifications ..... 58
3.9 DDR Module Specification ..... 62
3.10 Logic Element Specifications ..... 66
3.11 Global Resource Characteristics 68
3.12 FPGA Fabric SRAM ..... 69
3.13 Programming Times ..... 83
3.14 Math Block Timing Characteristics ..... 84
3.15 Embedded NVM (eNVM) Characteristics ..... 85
3.16 SRAM PUF ..... 85
3.17 Non-Deterministic Random Bit Generator (NRBG) Characteristics ..... 86
3.18 Cryptographic Block Characteristics ..... 87
3.19 Crystal Oscillator ..... 87
3.20 On-Chip Oscillator ..... 89
3.21 Clock Conditioning Circuits (CCC) ..... 90
3.22 JTAG ..... 93
3.23 System Controller SPI Characteristics ..... 94
3.24 Power-up to Functional Times ..... 95
3.25 DEVRST_N Characteristics ..... 97
3.26 DEVRST_N to Functional Times ..... 98
3.27 Flash*Freeze Timing Characteristics ..... 100
3.28 DDR Memory Interface Characteristics ..... 101
3.29 SFP Transceiver Characteristics ..... 101
3.30 SerDes Electrical and Timing AC and DC Characteristics ..... 101
3.31 SmartFusion 2 Specifications ..... 104
3.32 CAN Controller Characteristics ..... 108
3.33 USB Characteristics ..... 108
3.34 MMUART Characteristics ..... 108
3.35 IGLOO 2 Specifications ..... 108
Appendix A: Revision History ..... 111



© 2026 Microchip Technology Inc. and its subsidiaries.

# 1.0 DEVICE STATUS

The following table lists the design security densities and development status of the IGLOO 2 FPGA and SmartFusion 2 SoC FPGA devices,

**TABLE 1-1: IGLOO 2 AND SMARTFUSION 2 DESIGN SECURITY DENSITIES**

| Design Security Device Densities | Status |
|---|---|
| 005 | Production |
| 010, 010T | Production |
| 025, 025T | Production |
| 050, 050T | Production |
| 060, 060T | Production |
| 090, 090T | Production |
| 150, 150T | Production |

The following table lists the data security densities and development status of the IGLOO 2 FPGA and SmartFusion 2 SoC FPGA devices.

**TABLE 1-2: IGLOO 2 AND SMARTFUSION 2 DATA SECURITY DENSITIES**

| Data Security Device Densities | Status |
|---|---|
| 005S | Production |
| 010TS | Production |
| 025TS | Production |
| 050TS | Production |
| 060TS | Production |
| 090TS | Production |
| 150TS | Production |

## 2.0 REFERENCES

The following documents are recommended references:

- *PB0121: IGLOO2 Product Brief*
- *DS0124: IGLOO2 Pin Descriptions*
- *PB0115: SmartFusion2 SoC FPGA Product Brief*
- *DS0115: SmartFusion2 Pin Descriptions*

All product documentation for IGLOO 2 and SmartFusion 2 is available at:

- For IGLOO 2: https://www.microchip.com/en-us/products/fpgas-and-plds/fpgas/igloo-2-fpgas#Documentation
- For SmartFusion 2: https://www.microchip.com/en-us/products/fpgas-and-plds/system-on-chip-fpgas/smartfusion-2-fpgas#Documentation


© 2026 Microchip Technology Inc. and its subsidiaries

# 3.0 ELECTRICAL SPECIFICATIONS

## 3.1 Operating Conditions

The following table lists the stress limits. Stress applied above the specified limit may cause permanent damage to the device. Exposure to absolute maximum rating conditions for extended periods may affect device reliability.

Absolute maximum ratings are stress ratings only; functional operation of the device at these or any other conditions beyond those listed under the recommended operating conditions specified in the following table are not implied.

**TABLE 3-1: ABSOLUTE MAXIMUM RATINGS**

| Parameter | Symbol | Min. | Max. | Unit |
|---|---|---|---|---|
| DC core supply voltage. Must always power this pin. | $V_{DD}$ | –0.3 | 1.32 | V |
| Power supply for charge pumps (for normal operation and programming). Must always power this pin. | $V_{PP}$ | –0.3 | 3.63 | V |
| Analog power pad for MDDR PLL | MSS_MDDR_PLL_VDDA | –0.3 | 3.63 | V |
| Analog power pad for MDDR PLL | HPMS_MDDR_PLL_VDDA | –0.3 | 3.63 | V |
| Analog power pad for FDDR PLL | FDDR_PLL_VDDA | –0.3 | 3.63 | V |
| Analog power pad for MDDR PLL | PLL0_PLL1_MSS_MDDR_VDDA | –0.3 | 3.63 | V |
| Analog power pad for MDDR PLL | PLL0_PLL1_HPMS_MDDR_VDDA | –0.3 | 3.63 | V |
| Analog power pad for PLL0–5 | CCC_XX[01]_PLL_VDDA | –0.3 | 3.63 | V |
| High supply voltage for PLL SerDes[01] | SERDES_[01]_PLL_VDDA | –0.3 | 3.63 | V |
| Analog power for SerDes[01] PLL lane0 to lane3. This is a 2.5V SerDes internal PLL supply. | SERDES_[01]_L[0123]_VDDAPLL | –0.3 | 2.75 | V |
| TX/RX analog I/O voltage. Low voltage power for the lanes of SerDesIF0. This is a 1.2V SerDes PMA supply. | SERDES_[01]_L[0123]_VDDAIO | –0.3 | 1.32 | V |
| PCIe/PCS power supply | SERDES_[01]_VDD | –0.3 | 1.32 | V |
| DC FPGA I/O buffer supply voltage for MSIO I/O bank | $V_{DDIx}$ | –0.3 | 3.63 | V |
| DC FPGA I/O buffer supply voltage for MSIOD/DDRIO I/O banks | $V_{DDIx}$ | –0.3 | 2.75 | V |
| I/O Input voltage for MSIO I/O bank | $V_I$ | –0.3 | 3.63 | V |
| I/O Input voltage for MSIOD/DDRIO I/O bank | $V_I$ | –0.3 | 2.75 | V |
| Analog sense circuit supply of embedded nonvolatile memory (eNVM). Must be shorted to $V_{PP}$. | $V_{PPNVM}$ | –0.3 | 3.63 | V |
| Storage temperature[1] | $T_{STG}$ | –65 | 150 | °C |
| Junction temperature | $T_J$ | –55 | 135 | °C |

1 See Table 3-3 for flash programming and retention maximum limits. See Table 3-2 for recommended operating conditions.

**TABLE 3-2: RECOMMENDED OPERATING CONDITIONS[1, 2]**

| Parameter | Symbol | Min. | Typ. | Max. | Unit | Conditions |
|---|---|---|---|---|---|---|
| Operating junction temperature | $T_J$ | 0 | 25 | 85 | °C | Commercial |
| | | –40 | 25 | 100 | °C | Industrial |
| Programming junction temperatures[3] | $T_J$ | 0 | 25 | 85 | °C | Commercial |
| | | –40 | 25 | 100 | °C | Industrial |
| DC core supply voltage. Must always power this pin. | $V_{DD}$ | 1.14 | 1.2 | 1.26 | V | |
| Power supply for charge pumps (for normal operation and programming) for the 005, 010, 025, 050, 060 devices | $V_{PP}$ | 2.375 | 2.5 | 2.625 | V | 2.5V range |
| | | 3.15 | 3.3 | 3.45 | V | 3.3V range |

**TABLE 3-2: RECOMMENDED OPERATING CONDITIONS[1, 2] (CONTINUED)**

| Parameter | Symbol | Min. | Typ. | Max. | Unit | Conditions |
|---|---|---|---|---|---|---|
| Power supply for charge pumps (for normal operation and programming) for the 090 and 150 devices | $V_{PP}$ | 3.15 | 3.3 | 3.45 | V | 3.3V range |
| Analog power pad for MDDR PLL | MSS_MDDR_PLL_VDDA | 2.375 | 2.5 | 2.625 | V | 2.5V range |
| | | 3.15 | 3.3 | 3.45 | V | 3.3V range |
| Analog power pad for MDDR PLL | HPMS_MDDR_PLL_VDDA | 2.375 | 2.5 | 2.625 | V | 2.5V range |
| | | 3.15 | 3.3 | 3.45 | V | 3.3V range |
| Analog power pad for FDDR PLL | FDDR_PLL_VDDA | 2.375 | 2.5 | 2.625 | V | 2.5V range |
| | | 3.15 | 3.3 | 3.45 | V | 3.3V range |
| Analog power pad for MDDR PLL | PLL0_PLL1_MSS_MDDR_-VDDA | 2.375 | 2.5 | 2.625 | V | 2.5V range |
| | | 3.15 | 3.3 | 3.45 | V | 3.3V range |
| Analog power pad for MDDR PLL | PLL0_PLL1_HPMS_MD-DR_VDDA | 2.375 | 2.5 | 2.625 | V | 2.5V range |
| | | 3.15 | 3.3 | 3.45 | V | 3.3V range |
| Analog power pad for PLL0 to PLL5 | CCC_XX[01]_PLL_VDDA | 2.375 | 2.5 | 2.625 | V | 2.5V range |
| | | 3.15 | 3.3 | 3.45 | V | 3.3V range |
| High supply voltage for PLL SerDes[01] | SERDES_[01]_PLL_VDDA | 2.375 | 2.5 | 2.625 | V | 2.5V range |
| | | 3.15 | 3.3 | 3.45 | V | 3.3V range |
| Analog power for SerDes[01] PLL Lane 0 to Lane 3. This is a 2.5V SerDes internal PLL supply. | SERDES_[01]_L[0123]_VD-DAPLL | 2.375 | 2.5 | 2.625 | V | — |
| TX/RX analog I/O voltage. Low voltage power for the lanes of SerDesIF0. This is a 1.2V SerDes PMA supply. | SERDES_[01]_L[0123]_VD-DAIO | 1.14 | 1.2 | 1.26 | V | — |
| PCIe/PCS power supply | SERDES_[01]_VDD | 1.14 | 1.2 | 1.26 | V | — |
| 1.2V DC supply voltage | $V_{DDIx}$ | 1.14 | 1.2 | 1.26 | V | — |
| 1.5V DC supply voltage | $V_{DDIx}$ | 1.425 | 1.5 | 1.575 | V | — |
| 1.8V DC supply voltage | $V_{DDIx}$ | 1.71 | 1.8 | 1.89 | V | — |
| 2.5V DC supply voltage | $V_{DDIx}$ | 2.375 | 2.5 | 2.625 | V | — |
| 3.3V DC supply voltage | $V_{DDIx}$ | 3.15 | 3.3 | 3.45 | V | — |
| LVDS differential I/O | $V_{DDIx}$ | 2.375 | 2.5 | 3.45 | V | — |
| B-LVDS, M-LVDS, Mini-LVDS, RSDS differential I/O | $V_{DDIx}$ | 2.375 | 2.5 | 2.625 | V | — |
| LVPECL differential I/O | $V_{DDIx}$ | 3.15 | 3.3 | 3.45 | V | — |
| Reference voltage supply for FDDR and MDDR | $V_{REFx}$ | 0.49 × $V_{DDIx}$ | 0.5 × $V_{DDIx}$ | 0.51 × $V_{DDIx}$ | V | — |
| Analog sense circuit supply of embedded nonvolatile memory (eNVM). Must be shorted to $V_{PP}$. | $V_{PPNVM}$ | 2.375 | 2.5 | 2.625 | V | 2.5V range |
| | | 3.15 | 3.3 | 3.45 | V | 3.3V range |

1 The SERDES_[01]_VDD supply must be connected to $V_{DD}$.

2 This product is designed and validated for operation within the junction temperature ($T_J$) range specified in the Recommended Operating Conditions in this datasheet. Device functionality and performance outside this recommended operating range are not supported. Customers should account for the temperature difference between ambient ($T_A$) and junction ($T_J$) in their thermal environment and specific use case, which may result in a different and typically narrower ambient ($T_A$) operating temperature range.

3 Programming at Industrial temperature range is available only with $V_{PP}$ = 3.3V.

**Note:** All power supply ramps must be strictly monotonic, without plateaus.


© 2026 Microchip Technology Inc. and its subsidiaries

**TABLE 3-3: FPGA OPERATING LIMITS ([2,3, 4, 5])**

| Product Grade | Element | Programming Temperature | Operating Temperature | Programming Cycles | Digest Temperature | Digest Cycles | Retention (Biased/ Unbiased) |
|---|---|---|---|---|---|---|---|
| Commercial | FPGA | Min. $T_J$ = 0 °C<br>Max. $T_J$ = 85 °C | Min. $T_J$ = 0 °C<br>Max. $T_J$ = 85 °C | 500 | Min. $T_J$ = 0 °C<br>Max. $T_J$ = 85 °C | 2000 | 20 years |
| Industrial[1] | FPGA | Min. $T_J$ = –40 °C<br>Max. $T_J$ = 100 °C | Min. $T_J$ = –40 °C<br>Max. $T_J$ = 100 °C | 500 | Min. $T_J$ = –40 °C<br>Max. $T_J$ = 100 °C | 2000 | 20 years |

**Note 1:** Programming at Industrial temperature range is available only with $V_{PP}$ = 3.3V.

**2:** The device will have 20 years of retention after 500 programming cycles.

**3:** Digest verifies integrity and is a cryptographic hash of programmed nonvolatile data.

**4:** If your product qualification requires accelerated programming cycles, see the Microchip FPGA Reliability Report about recommended methodologies. To get a copy of Microchip FPGA Reliability Report contact Tech Support: https://microchipsupport.force.com/s/.

**5:** The SmartFusion® 2 and IGLOO® 2 FPGA Retention Calculator is on Secure Document Extranet (SDE) portal.

**6:** The purpose of the the SmartFusion® 2 and IGLOO® 2 retention lifetime calculator is to allow the user to model their system's total life cycle; from storage to deployment to operation. Applies to both biased/powered and unbiased/unpowered conditions.

**7:** Retention lifetime is the total time the device sees over the life of the product starting from the device Date Code onwards, including time spent in storage, or deployed.

The following table lists the embedded operating flash limits.

**TABLE 3-4: EMBEDDED OPERATING FLASH LIMITS**

| Product Grade | Element | Programming Temperature | Maximum Operating Temperature | Programming Cycles | Retention (Biased/ Unbiased) |
|---|---|---|---|---|---|
| Commercial | Embedded flash | Min. $T_J$ = 0 °C<br>Max. $T_J$ = 85 °C | Min. $T_J$ = 0 °C<br>Max. $T_J$ = 85 °C | < 1000 cycles per page, up to two million cycles per eNVM array | 20 years |
| | | | Min. $T_J$ = 0 °C<br>Max. $T_J$ = 85 °C | < 10000 cycles per page, up to 20 million cycles per eNVM array | 10 years |
| Industrial | Embedded flash | Min. $T_J$ = –40 °C<br>Max. $T_J$ = 100 °C | Min $T_J$ = –40 °C<br>Max $T_J$ = 100 °C | < 1000 cycles per page, up to two million cycles per eNVM array | 20 years |
| | | | Min. $T_J$ = –40 °C<br>Ma.x. $T_J$ = 100 °C | < 10000 cycles per page, up to 20 million cycles per eNVM array | 10 years |

**Note:** If your product qualification requires accelerated programming cycles, see the Microchip FPGA Reliability Report about recommended methodologies. To get a copy of Microchip FPGA Reliability Report contact Tech Support: *https://microchipsupport.force.com/s/*.

**TABLE 3-5: DEVICE STORAGE TEMPERATURE AND RETENTION**

| Product Grade | Storage Temperature (Tstg) | Retention |
|---|---|---|

**TABLE 3-5: DEVICE STORAGE TEMPERATURE AND RETENTION**

| | | |
|---|---|---|
| Commercial | Min. $T_J$ = 0 °C<br>Max. $T_J$ = 85 °C | 20 years |
| Industrial | Min. $T_J$ = –40 °C<br>Max. $T_J$ = 100 °C | 20 years |

**TABLE 3-6: HIGH TEMPERATURE DATA RETENTION (HTR) LIFETIME**

| $T_J$ (C) | HTR Lifetime[1] (yrs) |
|---|---|
| 90 | 20.5 |
| 95 | 20.5 |
| 100 | 20.5 |
| 105 | 17.0 |
| 110 | 15.0 |
| 115 | 13.0 |
| 120 | 11.5 |
| 125 | 10.0 |
| 130 | 8.0 |
| 135 | 6.0 |
| 140 | 4.5 |
| 145 | 3.0 |
| 150 | 1.5 |

1 HTR Lifetime is the period during which a verify failure is not expected due to flash leakage.

**FIGURE 3-1: HIGH TEMPERATURE DATA RETENTION (HTR)**

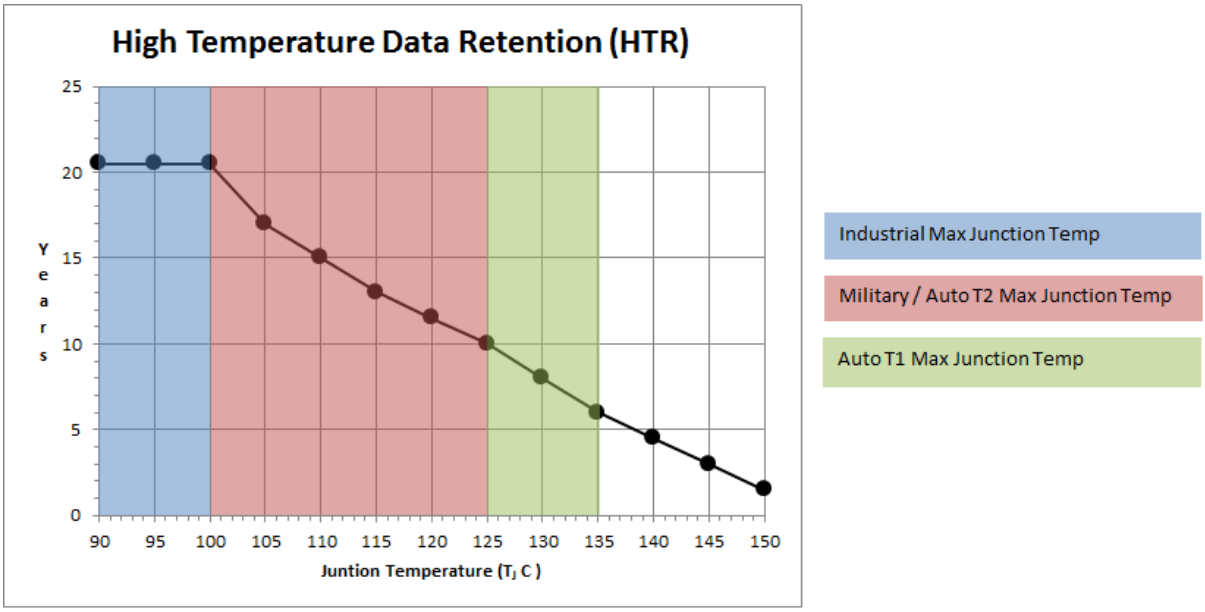


### 3.1.1 OVERSHOOT/UNDERSHOOT LIMITS

For AC signals, the input signal may undershoot during transitions to –1.0V for no longer than 10% of the period. The current during the transition must not exceed 100 mA.

For AC signals, the input signal may overshoot during transitions to $V_{CCI}$ + 1.0V for no longer than 10% of the period.


© 2026 Microchip Technology Inc. and its subsidiaries

The current during the transition must not exceed 100 mA.

**Note:** The preceding specifications do not apply to the PCI standard. The IGLOO 2 and SmartFusion 2 PCI I/Os are compliant with the PCI standard including the PCI overshoot/undershoot specifications.

### 3.1.2 THERMAL CHARACTERISTICS

The temperature variable in the Microchip SoC Products Group Designer software refers to the junction temperature, not the ambient, case, or board temperatures. This is an important distinction because dynamic and static power consumption causes the chip's junction temperature to be higher than the ambient, case, or board temperatures.

EQ1 through EQ3 give the relationship between thermal resistance, temperature gradient, and power.

**EQ1**

$$\theta_{JA} = \frac{T_J - T_A}{P}$$

**EQ2**

$$\theta_{JB} = \frac{T_J - T_B}{P}$$

**EQ3**

$$\theta_{JC} = \frac{T_J - T_C}{P}$$

where:

| | | |
|---|---|---|
| $\theta_{JA}$ | = | Junction-to-air thermal resistance |
| $\theta_{JB}$ | = | Junction-to-board thermal resistance |
| $\theta_{JC}$ | = | Junction-to-case thermal resistance |
| $T_J$ | = | Junction temperature |
| $T_A$ | = | Ambient temperature |
| $T_B$ | = | Board temperature (measured 1.0 mm away from the package edge) |
| $T_C$ | = | Case temperature |
| P | = | Total power dissipated by the device |

**TABLE 3-7: PACKAGE THERMAL RESISTANCE OF SMARTFUSION 2 AND IGLOO 2 DEVICES**

| Device | Still Air | 1.0 m/s | 2.5 m/s | $\theta_{JB}$ | $\theta_{JC}$ | Unit |
|---|---|---|---|---|---|---|
| | $\theta_{JA}$ | | | | | |
| **005** | | | | | | |
| FG484 | 19.36 | 15.81 | 14.63 | 9.74 | 5.27 | °C/W |
| VF256 | 41.30 | 38.16 | 35.30 | 28.41 | 3.94 | °C/W |
| VF400 | 20.19 | 16.94 | 15.41 | 8.86 | 4.95 | °C/W |
| TQ144 | 42.80 | 36.80 | 34.50 | 37.20 | 10.80 | °C/W |
| **010** | | | | | | |
| FG484 | 18.22 | 14.83 | 13.62 | 8.83 | 4.92 | °C/W |
| VF256 | 37.36 | 34.26 | 31.45 | 24.84 | 7.89 | °C/W |
| VF400 | 19.40 | 15.75 | 14.22 | 8.11 | 4.22 | °C/W |
| TQ144 | 38.60 | 32.60 | 30.30 | 31.80 | 8.60 | °C/W |
| **025** | | | | | | |
| FG484 | 17.03 | 13.66 | 12.45 | 7.66 | 4.18 | °C/W |
| VF256 | 33.85 | 30.59 | 27.85 | 21.63 | 6.13 | °C/W |
| VF400 | 18.36 | 14.89 | 13.36 | 7.12 | 3.41 | °C/W |

**TABLE 3-7: PACKAGE THERMAL RESISTANCE OF SMARTFUSION 2 AND IGLOO 2 DEVICES**

| Device | Still Air | 1.0 m/s | 2.5 m/s | $\theta_{JB}$ | $\theta_{JC}$ | Unit |
|---|---|---|---|---|---|---|
| | $\theta_{JA}$ | | | | | |
| FCS325 | 29.17 | 24.87 | 23.12 | 14.44 | 2.31 | °C/W |
| FCS158 | 36.12 | 32.05 | 29.66 | 19.02 | 5.4 | °C/W |
| **050** | | | | | | |
| FG484 | 15.29 | 12.19 | 10.99 | 6.27 | 3.24 | °C/W |
| FG896 | 14.70 | 12.50 | 10.90 | 7.20 | 4.90 | °C/W |
| VF400 | 17.53 | 14.17 | 12.63 | 6.32 | 2.81 | °C/W |
| FCS325 | 27.38 | 23.18 | 21.41 | 12.47 | 1.59 | °C/W |
| **060** | | | | | | |
| FG484 | 15.40 | 12.06 | 10.85 | 6.14 | 3.15 | °C/W |
| FG676 | 15.49 | 12.21 | 11.06 | 7.07 | 3.87 | °C/W |
| VF400 | 17.45 | 14.01 | 12.47 | 6.22 | 2.69 | °C/W |
| FCS325 | 27.03 | 22.91 | 21.25 | 12.33 | 1.54 | °C/W |
| VF784 | 15.51 | 11.63 | 10.44 | 5.83 | 3.05 | °C/W |
| **090** | | | | | | |
| FG484 | 14.64 | 11.37 | 10.16 | 5.43 | 2.77 | °C/W |
| FG676 | 14.52 | 11.19 | 10.37 | 6.17 | 3.24 | °C/W |
| FCS325 | 26.63 | 22.26 | 20.13 | 14.24 | 2.50 | °C/W |
| **150** | | | | | | |
| FC1152 | 9.08 | 6.81 | 5.87 | 2.56 | 0.38 | °C/W |
| FCS536 | 15.01 | 12.06 | 10.76 | 3.69 | 1.55 | °C/W |
| FCV484 | 16.21 | 13.11 | 11.84 | 6.73 | 0.10 | °C/W |

### 3.1.2.1 Theta-JA

Junction-to-ambient thermal resistance ($\theta_{JA}$) is determined under standard conditions specified by JEDEC (JESD-51), but it has little relevance in the actual performance of the product. It must be used with caution, but it is useful for comparing the thermal performance of one package with another.

The maximum power dissipation allowed is calculated using EQ4.

**EQ4**

$$\text{Maximum power allowed} = \frac{T_{J(MAX)} - T_{A(MAX)}}{\theta_{JA}}$$

The absolute maximum junction temperature is 100 °C. EQ5 shows a sample calculation of the absolute maximum power dissipation allowed for the M2GL050T-FG896 package at commercial temperature and in still air, where:

***Table 1-1 •***

$\theta_{JA}$ = 14.7 °C/W (taken from Table 3-7).

$T_A$ = 85 °C

**EQ5**

$$\text{Maximum power allowed} = \frac{100\ °C - 85\ °C}{14.7\ °C/W} = 1.088\,W$$

The power consumption of a device can be calculated using the Microchip SoC Products Group power calculator. The device's power consumption must be lower than the calculated maximum power dissipation by the package.

If the power consumption is higher than the device's maximum allowable power dissipation, a heat sink may be attached to the top of the case, or the airflow inside the system must be increased.


© 2026 Microchip Technology Inc. and its subsidiaries

#### 3.1.2.2 Theta-JB

Junction-to-board thermal resistance ($\theta_{JB}$) measures the ability of the package to dissipate heat from the surface of the chip to the PCB. As defined by the JEDEC (JESD-51) standard, the thermal resistance from the junction to the board uses an isothermal ring cold plate zone concept. The ring cold plate is simply a means to generate an isothermal boundary condition at the perimeter. The cold plate is mounted on a JEDEC standard board with a minimum distance of 5.0 mm away from the package edge.

#### 3.1.2.3 Theta-JC

Junction-to-case thermal resistance ($\theta_{JC}$) measures the ability of a device to dissipate heat from the surface of the chip to the top or bottom surface of the package. It is applicable to packages used with external heat sinks. Constant temperature is applied to the surface, which acts as a boundary condition.

This only applies to situations where all or nearly all the heat is dissipated through the surface in consideration.

### 3.1.3 ESD PERFORMANCE

To get information about ESD, see Microchip FPGA Reliability Report. To get a copy of Microchip FPGA Reliability Report, contact Tech Support: https://microchipsupport.force.com/s/.

## 3.2 Power Consumption

The following sections describe the power consumptions of the devices.

### 3.2.1 QUIESCENT SUPPLY CURRENT

**TABLE 3-8: QUIESCENT SUPPLY CURRENT CHARACTERISTICS**

| Power Supplies/Blocks | Modes and Configurations | |
|---|---|---|
| | Non-Flash*Freeze | Flash*Freeze |
| FPGA Core | On | Off |
| $V_{DD}$/SERDES_[01]_VDD[1] | On | On |
| $V_{PP}/V_{PPNVM}$ | On | On |
| HPMS_MDDR_PLL_VDDA/FDDR_PLL_VDDA/ CCC_XX[01]_PLL_VDDA/PLL0_PLL1_HPMS_MDDR_VDDA | 0V | 0V |
| SERDES_[01]_PLL_VDDA[2] | 0V | 0V |
| SERDES_[01]_L[0123]_VDDAPLL/VDD_2V5[2] | On | On |
| SERDES_[01]_L[0123]_VDDAIIO[2] | On | On |
| $V_{DDIx}$[3, 4] | On | On |
| $V_{REFx}$ | On | On |
| MSSDDR CLK | 32 kHz | 32 kHz |
| RAM | On | Sleep state |
| System controller | 50 MHz | 50 MHz |
| 50 MHz oscillator (enable/disable) | Enable | Disable |
| 1 MHz oscillator (enable/disable) | Disable | Enable |
| Crystal oscillator (enable/disable) | Disable | Disable |

1 SERDES_[01]_VDD Power Supply is shorted to $V_{DD}$.

2 SerDes and DDR blocks to be unused.

3 $V_{DDIx}$ has been set to ON for test conditions as described. Banks on the east side should always be powered with the appropriate $V_{DDI}$ bank supplies. For details on bank power supplies, see “Recommendation for Unused Bank Supplies” table in the *Board and Layout Design Guidelines for SmartFusion®2 SoC and IGLOO®2 FPGAs*.

4 No Differential (that is, LVDS) I/Os or ODT attributes must be used.

**TABLE 3-9: SMARTFUSION 2 AND IGLOO 2 QUIESCENT SUPPLY CURRENT ($V_{DD}$ = 1.2V)—TYPICAL PROCESS**

| Symbol | Modes | 005 | 010 | 025 | 050 | 060 | 090 | 150 | Unit | Conditions |
|---|---|---|---|---|---|---|---|---|---|---|
| IDC1 | Non-Flash*Freeze | 6.2 | 6.9 | 8.9 | 13.1 | 15.3 | 15.4 | 27.5 | mA | Typical ($T_J$ = 25 °C) |
| | | 24.0 | 28.4 | 40.6 | 67.8 | 80.6 | 81.4 | 144.7 | mA | Commercial ($T_J$ = 85 °C) |
| | | 35.2 | 41.9 | 60.5 | 102.1 | 121.4 | 122.6 | 219.1 | mA | Industrial ($T_J$ = 100 °C) |
| IDC2 | Flash*Freeze | 1.4 | 2.6 | 3.7 | 5.1 | 5.0 | 5.1 | 8.9 | mA | Typical ($T_J$ = 25 °C) |
| | | 12.0 | 20.0 | 26.6 | 35.3 | 35.4 | 35.7 | 57.8 | mA | Commercial ($T_J$ = 85 °C) |
| | | 18.5 | 30.8 | 41.0 | 54.5 | 54.5 | 55.0 | 89.0 | mA | Industrial ($T_J$ = 100 °C) |

**TABLE 3-10: SMARTFUSION 2 AND IGLOO 2 QUIESCENT SUPPLY CURRENT ($V_{DD}$ = 1.26V)—WORST-CASE PROCESS**

| Symbol | Modes | 005 | 010 | 025 | 050 | 060 | 090 | 150 | Unit | Conditions |
|---|---|---|---|---|---|---|---|---|---|---|
| IDC1 | Non-Flash*Freeze | 43.8 | 57.0 | 84.6 | 132.3 | 161.4 | 163.0 | 242.5 | mA | Commercial ($T_J$= 85 °C) |
| | | 65.3 | 85.7 | 127.8 | 200.9 | 245.4 | 247.8 | 369.0 | mA | Industrial ($T_J$ = 100 °C) |
| IDC2 | Flash*Freeze | 29.1 | 45.6 | 51.7 | 62.7 | 69.3 | 70.0 | 84.8 | mA | Commercial ($T_J$ = 85 °C) |
| | | 44.9 | 70.3 | 79.7 | 96.5 | 106.8 | 107.8 | 130.6 | mA | Industrial ($T_J$ = 100 °C) |

### 3.2.2 PROGRAMMING CURRENTS

The following tables list programming, verify, and Inrush currents for SmartFusion 2 SoC and IGLOO 2 FPGA devices.

**TABLE 3-11: CURRENTS DURING PROGRAM CYCLE, 0 °C ≤ $T_J$ ≤ 85 °C—TYPICAL PROCESS**

| Power Supplies | Voltage (V) | 005 | 010 | 025 | 050 | 060 | 090 | 150[1] | Unit |
|---|---|---|---|---|---|---|---|---|---|
| $V_{DD}$ | 1.26 | 46 | 53 | 55 | 58 | 30 | 42 | 52 | mA |
| $V_{PP}$ | 3.46 | 8 | 11 | 6 | 10 | 9 | 12 | 12 | mA |
| $V_{PPNVM}$ | 3.46 | 1 | 2 | 2 | 3 | 3 | 3 | | mA |
| $V_{DDI}$ | 2.62 | 31 | 16 | 17 | 1 | 12 | 12 | 81 | mA |
| | 3.46 | 62 | 31 | 36 | 1 | 12 | 17 | 84 | mA |
| Number of banks | — | 7 | 8 | 8 | 10 | 10 | 9 | 19 | |

1 $V_{PP}$ and $V_{PPNVM}$ are internally shorted.

**TABLE 3-12: CURRENTS DURING VERIFY CYCLE, 0 °C ≤ $T_J$ ≤ 85 °C—TYPICAL PROCESS**

| Power Supplies | Voltage (V) | 005 | 010 | 025 | 050 | 060 | 090 | 150[1] | Unit |
|---|---|---|---|---|---|---|---|---|---|
| $V_{DD}$ | 1.26 | 44 | 53 | 55 | 58 | 33 | 41 | 51 | mA |
| $V_{PP}$ | 3.46 | 6 | 5 | 3 | 15 | 8 | 11 | 12 | mA |
| $V_{PPNVM}$ | 3.46 | 1 | 0 | 0 | 1 | 1 | 1 | | mA |


© 2026 Microchip Technology Inc. and its subsidiaries

**TABLE 3-12: CURRENTS DURING VERIFY CYCLE, 0 °C ≤ $T_J$ ≤ 85 °C—TYPICAL PROCESS**

| | | | | | | | | | |
|---|---|---|---|---|---|---|---|---|---|
| $V_{DDI}$ | 2.62 | 31 | 16 | 17 | 1 | 12 | 11 | 81 | mA |
| | 3.46 | 61 | 32 | 36 | 1 | 12 | 17 | 84 | mA |
| Number of banks | — | 7 | 8 | 8 | 10 | 10 | 9 | 19 | — |

1 $V_{PP}$ and $V_{PPNVM}$ are internally shorted.

**TABLE 3-13: INRUSH CURRENTS AT POWER UP, –40 °C ≤ $T_J$ ≤ 100 °C—TYPICAL PROCESS**

| Power Supplies | Voltage (V) | 005 | 010 | 025 | 050 | 060 | 090 | 150 | Unit |
|---|---|---|---|---|---|---|---|---|---|
| $V_{DD}$ | 1.26 | 25 | 32 | 38 | 48 | 45 | 77 | 109 | mA |
| $V_{PP}$ | 3.46 | 33 | 49 | 36 | 180 | 13 | 36 | 51 | mA |
| $V_{DDI}$ | 2.62 | 134 | 141 | 161 | 187 | 93 | 272 | 388 | mA |
| Number of banks | — | 7 | 8 | 8 | 10 | 10 | 9 | 19 | — |

## 3.3 Average Fabric Temperature and Voltage Derating Factors

The following table lists the average temperature and voltage derating factors for fabric timing delays normalized to $T_J$ = 85 °C, in worst-case $V_{DD}$ = 1.14V.

**TABLE 3-14: AVERAGE JUNCTION TEMPERATURE AND VOLTAGE DERATING FACTORS FOR FABRIC TIMING DELAYS**

| Array Voltage $V_{DD}$ (V) | –40 °C | 0 °C | 25 °C | 70 °C | 85 °C | 100 °C |
|---|---|---|---|---|---|---|
| 1.14 | 0.83 | 0.89 | 0.92 | 0.98 | 1.00 | 1.02 |
| 1.2 | 0.75 | 0.80 | 0.83 | 0.89 | 0.91 | 0.93 |
| 1.26 | 0.69 | 0.73 | 0.76 | 0.81 | 0.83 | 0.85 |

## 3.4 Timing Model

This section describes timing model and timing parameters.

**FIGURE 3-2: TIMING MODEL**

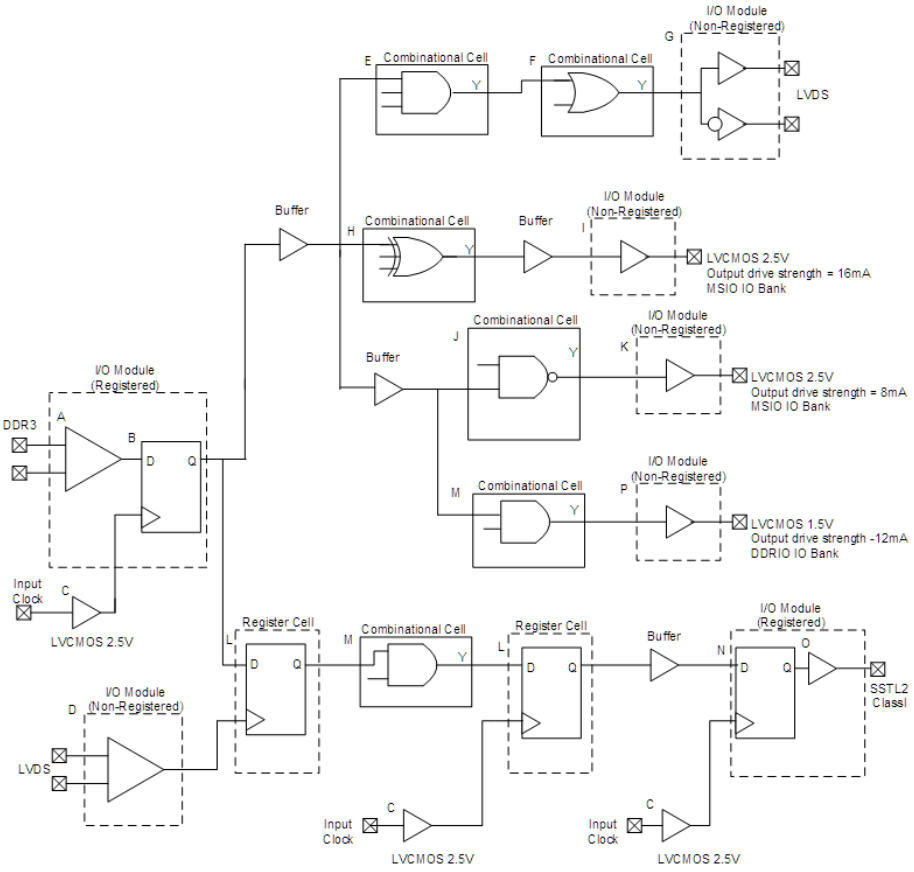


The following table lists the timing model parameters in worst commercial-case conditions when $T_J$ = 85 °C, $V_{DD}$ = 1.14V.

**TABLE 3-15: TIMING MODEL PARAMETERS**

| Index | Symbol | Description | –1 | Unit | For More Information |
|---|---|---|---|---|---|
| A | $T_{PY}$ | Propagation delay of DDR3 receiver | 1.605 | ns | See Table 3-135 |
| B | $T_{ICLKQ}$ | Clock-to-Q of the input data register | 0.16 | ns | See Table 3-219 |
| | $T_{ISUD}$ | Setup time of the input data register | 0.357 | ns | See Table 3-219 |
| C | $T_{RCKH}$ | Input high delay for global clock | 1.53 | ns | See Table 3-225 |
| | $T_{RCKL}$ | Input low delay for global clock | 0.897 | ns | See Table 3-225 |
| D | $T_{PY}$ | Input propagation delay of LVDS receiver | 2.774 | ns | See Table 3-165 |
| E | $T_{DP}$ | Propagation delay of a three-input AND gate | 0.198 | ns | See Table 3-221 |
| F | $T_{DP}$ | Propagation delay of an OR gate | 0.179 | ns | See Table 3-221 |
| G | $T_{DP}$ | Propagation delay of an LVDS transmitter | 2.136 | ns | See Table 3-167 |
| H | $T_{DP}$ | Propagation delay of a three-input XOR Gate | 0.241 | ns | See Table 3-221 |


© 2026 Microchip Technology Inc. and its subsidiaries

**TABLE 3-15: TIMING MODEL PARAMETERS (CONTINUED)**

| Index | Symbol | Description | –1 | Unit | For More Information |
|---|---|---|---|---|---|
| I | $T_{DP}$ | Propagation delay of LVCMOS 2.5V transmitter, drive strength of 16 mA on the MSIO bank | 2.412 | ns | See Table 3-44 |
| J | $T_{DP}$ | Propagation delay of a two-input NAND gate | 0.179 | ns | See Table 3-221 |
| K | $T_{DP}$ | Propagation delay of LVCMOS 2.5V transmitter, drive strength of 8 mA on the MSIO bank | 2.309 | ns | See Table 3-44 |
| L | $T_{CLKQ}$ | Clock-to-Q of the data register | 0.108 | ns | See Table 3-222 |
| | $T_{SUD}$ | Setup time of the data register | 0.254 | ns | See Table 3-222 |
| M | $T_{DP}$ | Propagation delay of a two-input AND gate | 0.179 | ns | See Table 3-221 |
| N | $T_{OCLKQ}$ | Clock-to-Q of the output data register | 0.263 | ns | See Table 3-218 |
| | $T_{OSUD}$ | Setup time of the output data register | 0.19 | ns | See Table 3-218 |
| O | $T_{DP}$ | Propagation delay of SSTL2, Class I transmitter on the MSIO bank | 2.055 | ns | See Table 3-112 |
| P | $T_{DP}$ | Propagation delay of LVCMOS 1.5V transmitter, drive strength of 12 mA, fast slew on the DDRIO bank | 3.316 | ns | See Table 3-68 |

## 3.5 User I/O Characteristics

There are three types of I/Os supported in the IGLOO 2 FPGA and SmartFusion 2 SoC FPGA families: MSIO, MSIOD, and DDRIO I/O banks. The I/O standards supported by the different I/O banks is described in the I/Os section of the *UG0445: IGLOO2 FPGA and SmartFusion2 SoC FPGA Fabric User Guide*.

### 3.5.1 INPUT BUFFER AND AC LOADING

The following figure shows the input buffer and AC loading.

**FIGURE 3-3: INPUT BUFFER AC LOADING**

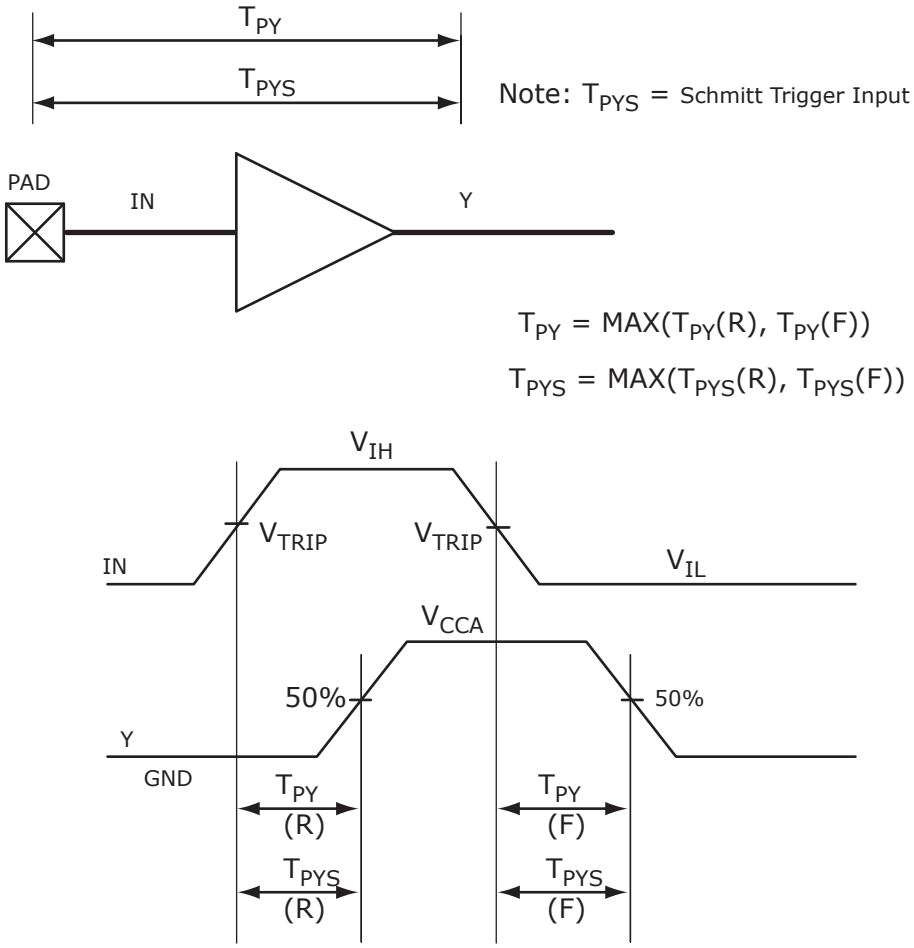



© 2026 Microchip Technology Inc. and its subsidiaries

### 3.5.2 OUTPUT BUFFER AND AC LOADING

The following figure shows the output buffer and AC loading.

**FIGURE 3-4: OUTPUT BUFFER AC LOADING**

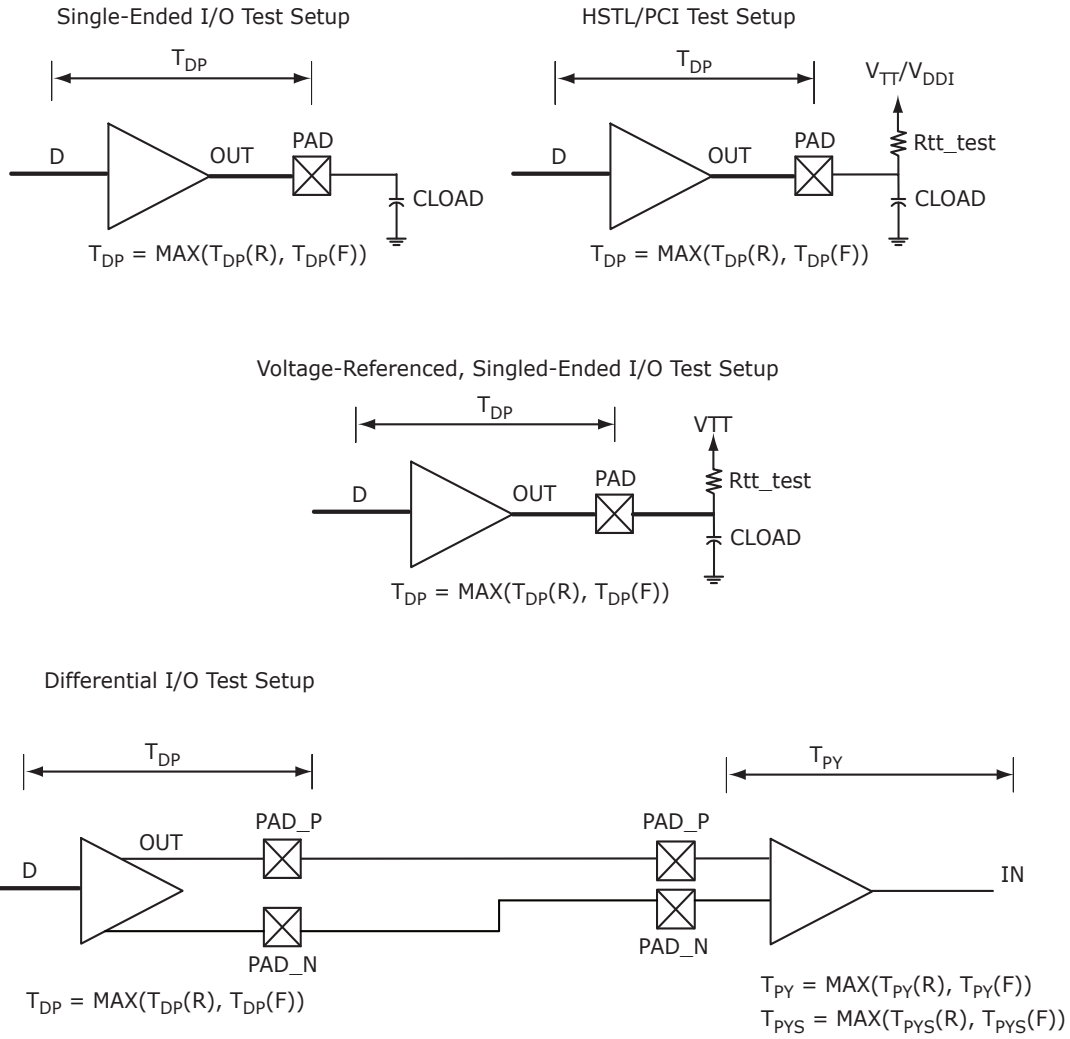


### 3.5.3 TRISTATE BUFFER AND AC LOADING

The tristate path for enable path loadings is described in the respective specifications. The following figure shows the methodology of characterization illustrated by the enable path test point.

**FIGURE 3-5: TRISTATE BUFFER FOR ENABLE PATH TEST POINT**

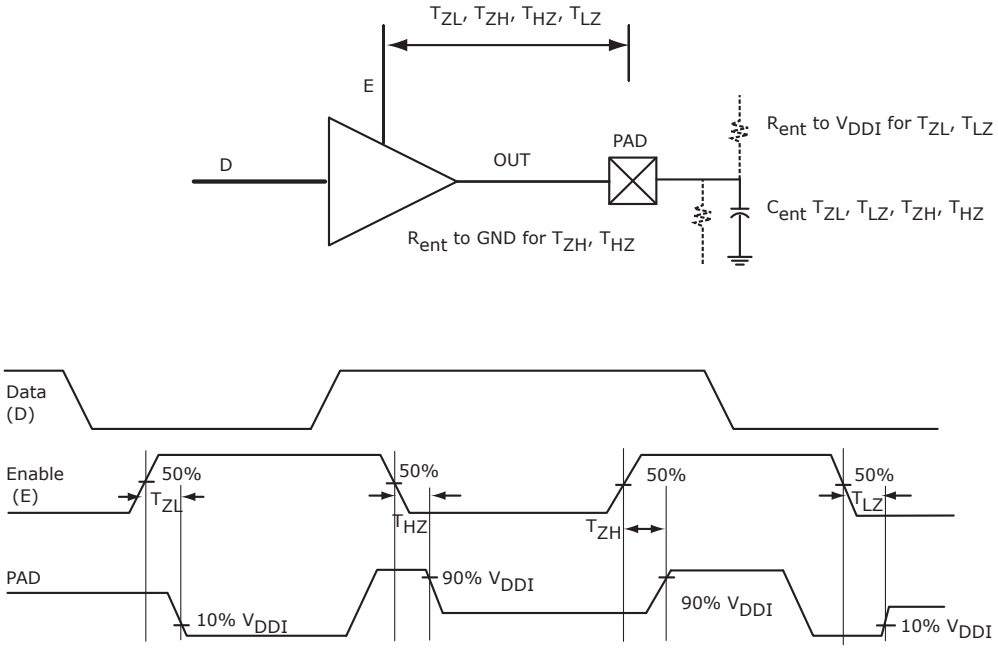


### 3.5.4 I/O SPEEDS

This section describes the maximum data rate summary of I/O in worst-case industrial conditions. See the individual I/O standards for operating conditions.

**TABLE 3-16: MAXIMUM DATA RATE SUMMARY TABLE FOR SINGLE-ENDED I/O IN WORST-CASE INDUSTRIAL CONDITIONS**

| I/O | MSIO | MSIOD | DDRIO | Unit |
|---|---|---|---|---|
| PCI 3.3V | 630 | — | — | Mbps |
| LVTTL 3.3V | 600 | — | — | Mbps |
| LVCMOS 3.3V | 600 | — | — | Mbps |
| LVCMOS 2.5V | 410 | 420 | 400 | Mbps |
| LVCMOS 1.8V | 295 | 400 | 400 | Mbps |
| LVCMOS 1.5V | 160 | 220 | 235 | Mbps |
| LVCMOS 1.2V | 120 | 160 | 200 | Mbps |
| LPDDR-LVCMOS 1.8V mode | — | — | 400 | Mbps |

**TABLE 3-17: MAXIMUM DATA RATE SUMMARY TABLE FOR VOLTAGE-REFERENCED I/O IN WORST-CASE INDUSTRIAL CONDITIONS**

| I/O | MSIO | MSIOD | DDRIO | Unit |
|---|---|---|---|---|
| LPDDR | — | — | 400 | Mbps |
| HSTL1.5V | — | — | 400 | Mbps |
| SSTL 2.5V | 510 | 700 | 400 | Mbps |
| SSTL 1.8V | — | — | 667 | Mbps |
| SSTL 1.5V | — | — | 667 | Mbps |


© 2026 Microchip Technology Inc. and its subsidiaries

**TABLE 3-18: MAXIMUM DATA RATE SUMMARY TABLE FOR DIFFERENTIAL I/O IN WORST-CASE INDUSTRIAL CONDITIONS**

| I/O | MSIO | MSIOD | Unit |
|---|---|---|---|
| LVPECL (input only) | 900 | — | Mbps |
| LVDS 3.3V | 535 | — | Mbps |
| LVDS 2.5V | 535 | 700 | Mbps |
| RSDS | 520 | 700 | Mbps |
| BLVDS | 500 | — | Mbps |
| MLVDS | 500 | — | Mbps |
| Mini-LVDS | 520 | 700 | Mbps |

**TABLE 3-19: MAXIMUM FREQUENCY SUMMARY TABLE FOR SINGLE-ENDED I/O IN WORST-CASE INDUSTRIAL CONDITIONS**

| I/O | MSIO | MSIOD | DDRIO | Unit |
|---|---|---|---|---|
| PCI 3.3V | 315 | — | — | MHz |
| LVTTL 3.3V | 300 | — | — | MHz |
| LVCMOS 3.3V | 300 | — | — | MHz |
| LVCMOS 2.5V | 205 | 210 | 200 | MHz |
| LVCMOS 1.8V | 147.5 | 200 | 200 | MHz |
| LVCMOS 1.5V | 80 | 110 | 118 | MHz |
| LVCMOS 1.2V | 60 | 80 | 100 | MHz |
| LPDDR– LVCMOS 1.8V mode | — | — | 200 | MHz |

**TABLE 3-20: MAXIMUM FREQUENCY SUMMARY TABLE FOR VOLTAGE-REFERENCED I/O IN WORST-CASE INDUSTRIAL CONDITIONS**

| I/O | MSIO | MSIOD | DDRIO | Unit |
|---|---|---|---|---|
| LPDDR | — | — | 200 | MHz |
| HSTL1.5V | — | — | 200 | MHz |
| SSTL 2.5V | 255 | 350 | 200 | MHz |
| SSTL 1.8V | — | — | 334 | MHz |
| SSTL 1.5V | — | — | 334 | MHz |

**TABLE 3-21: MAXIMUM FREQUENCY SUMMARY TABLE FOR DIFFERENTIAL I/O IN WORST-CASE INDUSTRIAL CONDITIONS**

| I/O | MSIO | MSIOD | Unit |
|---|---|---|---|
| LVPECL (input only) | 450 | — | MHz |
| LVDS 3.3V | 267.5 | — | MHz |
| LVDS 2.5V | 267.5 | 350 | MHz |
| RSDS | 260 | 350 | MHz |
| BLVDS | 250 | — | MHz |
| MLVDS | 250 | — | MHz |
| Mini-LVDS | 260 | 350 | MHz |

### 3.5.5 DETAILED I/O CHARACTERISTICS

**TABLE 3-22: INPUT CAPACITANCE, LEAKAGE CURRENT, AND RAMP TIME**

| Symbol | Description | Maximum | Unit | Conditions |
|---|---|---|---|---|
| $C_{IN}$ | Input capacitance | 10 | pF | — |
| $I_{IL}$ (dc) | Input current low (Applicable to HSTL/SSTL inputs only) | 400 | µA | $V_{DDI}$ = 2.5V |
| | | 500 | µA | $V_{DDI}$ = 1.8V |
| | | 600 | µA | $V_{DDI}$ = 1.5V[1] |
| | Input current low (Applicable to all other digital inputs) | 10 | µA | |
| $I_{IH}$ (dc) | Input current high (Applicable to HSTL/SSTL inputs only) | 400 | µA | $V_{DDI}$ = 2.5V |
| | | 500 | µA | $V_{DDI}$ = 1.8V |
| | | 600 | µA | $V_{DDI}$ = 1.5V[1] |
| | Input current high (Applicable to all other digital inputs) | 10 | µA | — |
| $T_{RAMPIN}$[2, 3] | Input ramp time (Applicable to all digital inputs) | 50 | ns | — |

1 Applicable when I/O pair is programmed with an HSTL/SSTL I/O type on IOP and an un-terminated I/O type (for example, LVCMOS) on ION pad.

2. Input signal must be monotonic.

3. Device inputs on MSIO, MSIOD, and DEVRST pins verified to function up to 1 ms ramp rate with no reliability issues. Timing is only characterized to 50 ns.

The following table lists the minimum and maximum I/O weak pull-up/pull-down resistance values of DDRIO I/O bank at $V_{OH}/V_{OL}$ level.

**TABLE 3-23: I/O WEAK PULL-UP/PULL-DOWN RESISTANCES FOR DDRIO I/O BANK**

| $V_{DDI}$ Domain | R (WEAK PULL-UP) at $V_{OH}$ (Ω) | | R (WEAK PULL-DOWN) at $V_{OL}$ (Ω) | |
|---|---|---|---|---|
| | Min. | Max. | Min. | Max. |
| 2.5 V[1, 2] | 10K | 17.8K | 9.98K | 18K |
| 1.8 V[1, 2] | 10.3K | 19.1K | 10.3K | 19.5K |
| 1.5 V[1, 2] | 10.6K | 20.2K | 10.6K | 21.1K |
| 1.2 V[1, 2] | 11.1K | 22.7K | 11.2K | 24.6K |

1 R(WEAK PULL-DOWN) = (VOLspec)/I(WEAK PULL-DOWN MAX).

2 R(WEAK PULL-UP) = (VDDImax – VOHspec)/I(WEAK PULL-UP MIN).

The following table lists the minimum and maximum I/O weak pull-up/pull-down resistance values of MSIO I/O bank at $V_{OH}/V_{OL}$ level.

**TABLE 3-24: I/O WEAK PULL-UP/PULL-DOWN RESISTANCES FOR MSIO I/O BANK**

| $V_{DDI}$ Domain | R (WEAK PULL-UP) at $V_{OH}$ (Ω) | | R (WEAK PULL-DOWN) at $V_{OL}$ (Ω) | |
|---|---|---|---|---|
| | Min. | Max. | Min. | Max. |
| 3.3 V | 9.9K | 17.1K | 9.98K | 17.5K |
| 2.5 V[1, 2] | 10K | 17.6K | 10.1K | 18.4K |
| 1.8 V[1, 2] | 10.4K | 19.1K | 10.4K | 20.4K |
| 1.5 V[1, 2] | 10.7K | 20.4K | 10.8K | 22.2K |
| 1.2 V[1, 2] | 11.3K | 23.2K | 11.5K | 26.7K |

1 R(WEAK PULL-DOWN) = (VOLspec)/I(WEAK PULL-DOWN MAX).


© 2026 Microchip Technology Inc. and its subsidiaries

2 R(WEAK PULL-UP) = (VDDImax – VOHspec)/I(WEAK PULL-UP MIN).

The following table lists the minimum and maximum I/O weak pull-up/pull-down resistance values of MSIOD I/O bank at $V_{OH}/V_{OL}$ level.

**TABLE 3-25: I/O WEAK PULL-UP/PULL-DOWN RESISTANCES FOR MSIOD I/O BANK**

| $V_{DDI}$ Domain | R (WEAK PULL-UP) at $V_{OH}$ (Ω) | | R (WEAK PULL-DOWN) at $V_{OL}$ (Ω) | |
|---|---|---|---|---|
| | Min. | Max. | Min. | Max. |
| 2.5 V[1, 2] | 9.6K | 16.6K | 9.5K | 16.4K |
| 1.8 V[1, 2] | 9.7K | 17.3K | 9.7K | 17.1K |
| 1.5 V[1, 2] | 9.9K | 18K | 9.8K | 17.6K |
| 1.2 V[1, 2] | 10.3K | 19.6K | 10K | 19.1K |

1 R(WEAK PULL-DOWN) = (VOLspec)/I(WEAK PULL-DOWN MAX).
2 R(WEAK PULL-UP) = (VDDImax – VOHspec)/I(WEAK PULL-UP MIN).

The following table lists the hysteresis voltage value for schmitt trigger mode input buffers.

**TABLE 3-26: SCHMITT TRIGGER INPUT HYSTERESIS**

| Input Buffer Configuration | Hysteresis Value (Typical, Unless Otherwise Noted) |
|---|---|
| 3.3V LVTTL/LVCMOS/ PCI/PCI-X | 0.05 × $V_{DDI}$ (worst-case) |
| 2.5V LVCMOS | 0.05 × $V_{DDI}$ (worst-case) |
| 1.8V LVCMOS | 0.1 × $V_{DDI}$ (worst-case) |
| 1.5V LVCMOS | 60 mV |
| 1.2V LVCMOS | 20 mV |

## 3.5.6 SINGLE-ENDED I/O STANDARDS

### 3.5.6.1 Low Voltage Complementary Metal Oxide Semiconductor (LVCMOS)

LVCMOS is a widely used switching standard implemented in CMOS transistors. This standard is defined by JEDEC (JESD 8-5). The LVCMOS standards supported in IGLOO 2 FPGAs and SmartFusion 2 SoC FPGAs are: LVCMOS12, LVCMOS15, LVCMOS18, LVCMOS25, and LVCMOS33.

### 3.5.6.2 3.3V LVCMOS/LVTTL

LVCMOS 3.3V or Low-Voltage Transistor-Transistor Logic (LVTTL) is a general standard for 3.3V applications.

**Minimum and Maximum DC/AC Input and Output Levels Specification**

**TABLE 3-27: LVTTL/LVCMOS 3.3V DC RECOMMENDED DC OPERATING CONDITIONS (APPLICABLE TO MSIO I/O BANK ONLY)**

| Parameter | Symbol | Min. | Typ. | Max. | Unit |
|---|---|---|---|---|---|
| Supply voltage | $V_{DDI}$ | 3.15 | 3.3 | 3.45 | V |

**TABLE 3-28: LVTTL/LVCMOS 3.3V INPUT VOLTAGE SPECIFICATION (APPLICABLE TO MSIO I/O BANK ONLY)**

| Parameter | Symbol | Min. | Max. | Unit |
|---|---|---|---|---|
| DC input logic high | $V_{IH}$ (DC) | 2.0 | 3.45 | V |
| DC input logic low | $V_{IL}$ (DC) | –0.3 | 0.8 | V |
| Input current high[1] | $I_{IH}$ (DC) | — | — | — |
| Input current low[1] | $I_{IL}$ (DC) | — | — | — |

1 See Table 3-22.

**TABLE 3-29: LVCMOS 3.3V DC OUTPUT VOLTAGE SPECIFICATION (APPLICABLE TO MSIO I/O BANK ONLY)**

| Parameter | Symbol | Min. | Max. | Unit |
|---|---|---|---|---|
| DC output logic high[1] | $V_{OH}$ | $V_{DDI}$–0.4 | — | V |
| DC output logic low[1] | $V_{OL}$ | — | 0.4 | V |

1 The $V_{OH}/V_{OL}$ test points selected ensure compliance with LVCMOS 3.3V JESD8-B requirements.

**TABLE 3-30: LVTTL 3.3V DC OUTPUT VOLTAGE SPECIFICATION (APPLICABLE TO MSIO I/O BANK ONLY)**

| Parameter | Symbol | Min. | Max. | Unit |
|---|---|---|---|---|
| DC output logic high | $V_{OH}$ | 2.4 | — | V |
| DC output logic low | $V_{OL}$ | — | 0.4 | V |

**TABLE 3-31: LVTTL/LVCMOS 3.3V AC MAXIMUM SWITCHING SPEED (APPLICABLE TO MSIO I/O BANK ONLY)**

| Parameter | Symbol | Max. | Unit | Conditions |
|---|---|---|---|---|
| Maximum data rate (for MSIO I/O bank) | $D_{MAX}$ | 600 | Mbps | AC loading: 17 pF load, maximum drive/slew |

**TABLE 3-32: LVTTL/LVCMOS 3.3V AC TEST PARAMETER SPECIFICATIONS (APPLICABLE TO MSIO I/O BANK ONLY)**

| Parameter | Symbol | Typ. | Unit |
|---|---|---|---|
| Measuring/trip point for data path | $V_{TRIP}$ | 1.4 | V |
| Resistance for enable path ($T_{ZH}$, $T_{ZL}$, $T_{HZ}$, $T_{LZ}$) | $R_{ENT}$ | 2K | Ω |
| Capacitive loading for enable path ($T_{ZH}$, $T_{ZL}$, $T_{HZ}$, $T_{LZ}$) | $C_{ENT}$ | 5 | pF |
| Capacitive loading for data path ($T_{DP}$) | $C_{LOAD}$ | 5 | pF |

**TABLE 3-33: LVTTL/LVCMOS 3.3V TRANSMITTER DRIVE STRENGTH SPECIFICATIONS FOR MSIO I/O BANK**

| Output Drive Selection | $V_{OH}$ (V) | $V_{OL}$ (V) | IOH (at $V_{OH}$) mA | IOL (at $V_{OL}$) mA |
|---|---|---|---|---|
| 2 mA | $V_{DDI}$–0.4 | 0.4 | 2 | 2 |
| 4 mA | $V_{DDI}$–0.4 | 0.4 | 4 | 4 |
| 8 mA | $V_{DDI}$–0.4 | 0.4 | 8 | 8 |
| 12 mA | $V_{DDI}$–0.4 | 0.4 | 12 | 12 |
| 16 mA | $V_{DDI}$–0.4 | 0.4 | 16 | 16 |
| 20 mA | $V_{DDI}$–0.4 | 0.4 | 20 | 20 |

**Note:** For a detailed I/V curve, use the corresponding IBIS models:

- For IGLOO 2: https://www.microchip.com/en-us/products/fpgas-and-plds/fpgas/igloo-2-fpgas#Documentation.
- For SmartFusion 2: https://www.microchip.com/en-us/products/fpgas-and-plds/system-on-chip-fpgas/smartfusion-2-fpgas#Documentation.


© 2026 Microchip Technology Inc. and its subsidiaries

**AC Switching Characteristics**

Worst commercial-case conditions: $T_J$ = 85 °C, $V_{DD}$ = 1.14V, and $V_{DDI}$ = 3.0V.

**TABLE 3-34: LVTTL/LVCMOS 3.3V RECEIVER CHARACTERISTICS FOR MSIO I/O BANK (INPUT BUFFERS)**

| On-Die Termination (ODT) | $T_{PY}$ | | $T_{PYS}$ | | Unit |
|---|---|---|---|---|---|
| | –1 | –Std | –1 | –Std | |
| None | 2.262 | 2.663 | 2.289 | 2.695 | ns |

**TABLE 3-35: LVTTL/LVCMOS 3.3V TRANSMITTER CHARACTERISTICS FOR MSIO I/O BANK (OUTPUT AND TRISTATE BUFFERS)**

| Output Drive Selection | Slew Control | $T_{DP}$ | | $T_{ZL}$ | | $T_{ZH}$ | | $T_{HZ}$[1] | | $T_{LZ}$[1] | | Unit |
|---|---|---|---|---|---|---|---|---|---|---|---|---|
| | | –1 | –Std | –1 | –Std | –1 | –Std | –1 | –Std | –1 | –Std | |
| 2 mA | Slow | 3.192 | 3.755 | 3.47 | 4.083 | 2.969 | 3.494 | 1.856 | 2.183 | 3.337 | 3.926 | ns |
| 4 mA | Slow | 2.331 | 2.742 | 2.673 | 3.145 | 2.526 | 2.973 | 3.034 | 3.569 | 4.451 | 5.236 | ns |
| 8 mA | Slow | 2.135 | 2.511 | 2.33 | 2.741 | 2.297 | 2.703 | 4.532 | 5.331 | 4.825 | 5.676 | ns |
| 12 mA | Slow | 2.052 | 2.414 | 2.107 | 2.479 | 2.162 | 2.544 | 5.75 | 6.764 | 5.445 | 6.406 | ns |
| 16 mA | Slow | 2.062 | 2.425 | 2.072 | 2.438 | 2.145 | 2.525 | 5.993 | 7.05 | 5.625 | 6.618 | ns |
| 20 mA | Slow | 2.148 | 2.527 | 1.999 | 2.353 | 2.088 | 2.458 | 6.262 | 7.367 | 5.876 | 6.913 | ns |

1 Delay increases with drive strength are inherent to built-in slew control circuitry for Simultaneous Switching Output (SSO) management.

### 3.5.7 2.5V LVCMOS

LVCMOS 2.5V is a general standard for 2.5V applications and is supported in IGLOO 2 FPGA and SmartFusion 2 SoC FPGAs that follow the JEDEC specification JESD8-5A.

**Minimum and Maximum DC/AC Input and Output Levels Specification**

**TABLE 3-36: LVCMOS 2.5 V DC RECOMMENDED DC OPERATING CONDITIONS**

| Parameter | Symbol | Min. | Typ. | Max. | Unit |
|---|---|---|---|---|---|
| Supply voltage | $V_{DDI}$ | 2.375 | 2.5 | 2.625 | V |

**TABLE 3-37: LVCMOS 2.5 V DC INPUT VOLTAGE SPECIFICATION**

| Parameter | Symbol | Min. | Max. | Unit |
|---|---|---|---|---|
| DC input logic high (for MSIOD and DDRIO I/O banks) | $V_{IH}$ (DC) | 1.7 | 2.625 | V |
| DC input logic high (for MSIO I/O bank) | $V_{IH}$ (DC) | 1.7 | 3.45 | V |
| DC input logic low | $V_{IL}$ (DC) | –0.3 | 0.7 | V |
| Input current high[1] | $I_{IH}$ (DC) | — | — | — |
| Input current low[1] | $I_{IL}$ (DC) | — | — | — |

1 See Table 3-22.

**TABLE 3-38: LVCMOS 2.5V DC OUTPUT VOLTAGE SPECIFICATION**

| Parameter | Symbol | Min. | Max. | Unit |
|---|---|---|---|---|
| DC output logic high | $V_{OH}$[1] | $V_{DDI}$ – 0.4 | — | V |
| DC output logic low | $V_{OL}$[1] | — | 0.4 | V |

1 The VOH/VOL test points selected ensure compliance with LVCMOS 2.5 V JEDEC8-5A requirements.

**TABLE 3-39: LVCMOS 2.5V AC MINIMUM AND MAXIMUM SWITCHING SPEED**

| Parameter | Symbol | Max. | Unit | Conditions |
|---|---|---|---|---|
| Maximum data rate (for DDRIO I/O bank) | $D_{MAX}$ | 400 | Mbps | AC loading: 17 pF load, maximum drive/slew |
| Maximum data rate (for MSIO I/O bank) | $D_{MAX}$ | 410 | Mbps | AC loading: 17 pF load, maximum drive/slew |
| Maximum data rate (for MSIOD I/O bank) | $D_{MAX}$ | 420 | Mbps | AC loading: 17 pF load, maximum drive/slew |

**TABLE 3-40: LVCMOS 2.5V AC CALIBRATED IMPEDANCE OPTION**

| Parameter | Symbol | Typ. | Unit |
|---|---|---|---|
| Supported output driver calibrated impedance (for DDRIO I/O bank) | Rodt_cal | 75, 60, 50, 33, 25, 20 | Ω |

**TABLE 3-41: LVCMOS 2.5V AC TEST PARAMETER SPECIFICATIONS**

| Parameter | Symbol | Typ. | Unit |
|---|---|---|---|
| Measuring/trip point for data path | $V_{TRIP}$ | 1.2 | V |
| Resistance for enable path ($T_{ZH}$, $T_{ZL}$, $T_{HZ}$, $T_{LZ}$) | $R_{ENT}$ | 2K | Ωσ |
| Capacitive loading for enable path ($T_{ZH}$, $T_{ZL}$, $T_{HZ}$, $T_{LZ}$) | $C_{ENT}$ | 5 | pF |
| Capacitive loading for data path ($T_{DP}$) | $C_{LOAD}$ | 5 | pF |

**TABLE 3-42: LVCMOS 2.5V TRANSMITTER DRIVE STRENGTH SPECIFICATIONS**

| Output Drive Selection | | | VOH (V) | VOL (V) | IOH (at VOH) mA | IOL (at VOL) mA |
|---|---|---|---|---|---|---|
| MSIO I/O Bank | MSIOD I/O Bank | DDRIO I/O Bank (With Software Default Fixed Code) | Min. | Max. | | |
| 2 mA | 2 mA | 2 mA | $V_{DDI}$–0.4 | 0.4 | 2 | 2 |
| 4 mA | 4 mA | 4 mA | $V_{DDI}$–0.4 | 0.4 | 4 | 4 |
| 6 mA | 6 mA | 6 mA | $V_{DDI}$–0.4 | 0.4 | 6 | 6 |
| 8 mA | 8 mA | 8 mA | $V_{DDI}$–0.4 | 0.4 | 8 | 8 |
| 12 mA | 12 mA | 12 mA | $V_{DDI}$–0.4 | 0.4 | 12 | 12 |
| 16 mA | — | 16 mA | $V_{DDI}$–0.4 | 0.4 | 16 | 16 |

**Note:** For board design considerations, output slew rates extraction, detailed output buffer resistances, and I/V curve, use the corresponding IBIS models located at:

- For IGLOO 2: https://www.microchip.com/en-us/products/fpgas-and-plds/fpgas/igloo-2-fpgas#Documentation
- For SmartFusion 2: https://www.microchip.com/en-us/products/fpgas-and-plds/system-on-chip-fpgas/smartfusion-2-fpgas#Documentation

**AC Switching Characteristics**

Worst commercial-case conditions: $T_J$ = 85 °C, $V_{DD}$ = 1.14V, and $V_{DDI}$ = 2.375V.

**TABLE 3-43: LVCMOS 2.5V RECEIVER CHARACTERISTICS (INPUT BUFFERS)**

| | On-Die Termination (ODT) | $T_{PY}$ | | $T_{PYS}$ | | Unit |
|---|---|---|---|---|---|---|
| | | –1 | –Std | –1 | –Std | |


© 2026 Microchip Technology Inc. and its subsidiaries

**TABLE 3-43: LVCMOS 2.5V RECEIVER CHARACTERISTICS (INPUT BUFFERS)**

| | | | | | | |
|---|---|---|---|---|---|---|
| **LVCMOS 2.5 V (for DDRIO I/O bank)** | None | 1.823 | 2.145 | 1.932 | 2.274 | ns |
| **LVCMOS 2.5 V (for MSIO I/O bank)** | None | 2.486 | 2.925 | 2.495 | 2.935 | ns |
| **LVCMOS 2.5 V (for MSIOD I/O bank)** | None | 2.29 | 2.694 | 2.305 | 2.712 | ns |

**TABLE 3-44: LVCMOS 2.5V TRANSMITTER CHARACTERISTICS FOR DDRIO BANK (OUTPUT AND TRISTATE BUFFERS)**

| Output Drive Selection | Slew Control | $T_{DP}$ | | $T_{ZL}$ | | $T_{ZH}$ | | $T_{HZ}$[1] | | $T_{LZ}$[1] | | Unit |
|---|---|---|---|---|---|---|---|---|---|---|---|---|
| | | –1 | –Std | –1 | –Std | –1 | –Std | –1 | –Std | –1 | –Std | |
| 2 mA | Slow | 3.657 | 4.302 | 3.393 | 3.991 | 3.675 | 4.323 | 3.894 | 4.582 | 3.552 | 4.18 | ns |
| | Medium | 3.374 | 3.97 | 3.139 | 3.693 | 3.396 | 3.995 | 3.635 | 4.277 | 3.253 | 3.828 | ns |
| | Medium fast | 3.239 | 3.811 | 3.036 | 3.572 | 3.261 | 3.836 | 3.519 | 4.141 | 3.128 | 3.681 | ns |
| | Fast | 3.224 | 3.793 | 3.029 | 3.563 | 3.246 | 3.818 | 3.512 | 4.132 | 3.119 | 3.67 | ns |
| 4 mA | Slow | 3.095 | 3.641 | 2.705 | 3.182 | 3.088 | 3.633 | 4.738 | 5.575 | 4.348 | 5.116 | ns |
| | Medium | 2.825 | 3.324 | 2.488 | 2.927 | 2.823 | 3.321 | 4.492 | 5.285 | 4.063 | 4.781 | ns |
| | Medium fast | 2.701 | 3.178 | 2.384 | 2.804 | 2.698 | 3.173 | 4.364 | 5.135 | 3.945 | 4.642 | ns |
| | Fast | 2.69 | 3.165 | 2.377 | 2.796 | 2.687 | 3.161 | 4.359 | 5.129 | 3.94 | 4.636 | ns |
| 6 mA | Slow | 2.919 | 3.434 | 2.491 | 2.93 | 2.902 | 3.414 | 5.085 | 5.983 | 4.674 | 5.5 | ns |
| | Medium | 2.65 | 3.118 | 2.279 | 2.681 | 2.642 | 3.108 | 4.845 | 5.701 | 4.375 | 5.148 | ns |
| | Medium fast | 2.529 | 2.975 | 2.176 | 2.56 | 2.521 | 2.965 | 4.724 | 5.558 | 4.259 | 5.011 | ns |
| | Fast | 2.516 | 2.96 | 2.168 | 2.551 | 2.508 | 2.95 | 4.717 | 5.55 | 4.251 | 5.002 | ns |
| 8 mA | Slow | 2.863 | 3.368 | 2.427 | 2.855 | 2.844 | 3.346 | 5.196 | 6.114 | 4.769 | 5.612 | ns |
| | Medium | 2.599 | 3.058 | 2.217 | 2.608 | 2.59 | 3.047 | 4.952 | 5.827 | 4.471 | 5.261 | ns |
| | Medium fast | 2.483 | 2.921 | 2.114 | 2.487 | 2.473 | 2.91 | 4.832 | 5.685 | 4.364 | 5.134 | ns |
| | Fast | 2.467 | 2.902 | 2.106 | 2.478 | 2.457 | 2.89 | 4.826 | 5.678 | 4.348 | 5.116 | ns |
| 12 mA | Slow | 2.747 | 3.232 | 2.296 | 2.701 | 2.724 | 3.204 | 5.39 | 6.342 | 4.938 | 5.81 | ns |
| | Medium | 2.493 | 2.934 | 2.102 | 2.473 | 2.483 | 2.921 | 5.166 | 6.078 | 4.65 | 5.471 | ns |
| | Medium fast | 2.382 | 2.803 | 2.006 | 2.36 | 2.371 | 2.789 | 5.067 | 5.962 | 4.546 | 5.349 | ns |
| | Fast | 2.369 | 2.787 | 1.999 | 2.352 | 2.357 | 2.773 | 5.063 | 5.958 | 4.538 | 5.339 | ns |
| 16 mA | Slow | 2.677 | 3.149 | 2.213 | 2.604 | 2.649 | 3.116 | 5.575 | 6.56 | 5.08 | 5.977 | ns |
| | Medium | 2.432 | 2.862 | 2.028 | 2.386 | 2.421 | 2.848 | 5.372 | 6.32 | 4.801 | 5.649 | ns |
| | Medium fast | 2.324 | 2.734 | 1.937 | 2.278 | 2.311 | 2.718 | 5.297 | 6.233 | 4.7 | 5.531 | ns |
| | Fast | 2.313 | 2.721 | 1.929 | 2.269 | 2.3 | 2.706 | 5.296 | 6.231 | 4.699 | 5.529 | ns |

1 Delay increases with drive strength are inherent to built-in slew control circuitry for SSO management.

**TABLE 3-45: LVCMOS 2.5V TRANSMITTER CHARACTERISTICS FOR MSIO BANK (OUTPUT AND TRISTATE BUFFERS)**

| Output Drive Selection | Slew Control | $T_{DP}$ | | $T_{ZL}$ | | $T_{ZH}$ | | $T_{HZ}$[1] | | $T_{LZ}$[1] | | Unit |
|---|---|---|---|---|---|---|---|---|---|---|---|---|
| | | –1 | –Std | –1 | –Std | –1 | –Std | –1 | –Std | –1 | –Std | |
| 2 mA | Slow | 3.48 | 4.095 | 3.855 | 4.534 | 3.785 | 4.453 | 2.12 | 2.494 | 3.45 | 4.059 | ns |
| 4 mA | Slow | 2.583 | 3.039 | 3.042 | 3.579 | 3.138 | 3.691 | 4.143 | 4.874 | 4.687 | 5.513 | ns |
| 6 mA | Slow | 2.392 | 2.815 | 2.669 | 3.139 | 2.82 | 3.317 | 4.909 | 5.775 | 5.083 | 5.98 | ns |
| 8 mA | Slow | 2.309 | 2.717 | 2.565 | 3.017 | 2.74 | 3.223 | 5.812 | 6.837 | 5.523 | 6.497 | ns |
| 12 mA | Slow | 2.333 | 2.745 | 2.437 | 2.867 | 2.626 | 3.089 | 6.131 | 7.213 | 5.712 | 6.72 | ns |
| 16 mA | Slow | 2.412 | 2.838 | 2.335 | 2.747 | 2.533 | 2.979 | 6.54 | 7.694 | 6.007 | 7.067 | ns |

1 Delay increases with drive strength are inherent to built-in slew control circuitry for SSO management.

**TABLE 3-46: LVCMOS 2.5V TRANSMITTER CHARACTERISTICS FOR MSIOD BANK (OUTPUT AND TRISTATE BUFFERS)**

| Output Drive Selection | Slew Control | $T_{DP}$ | | $T_{ZL}$ | | $T_{ZH}$ | | $T_{HZ}$[1] | | $T_{LZ}$[1] | | Unit |
|---|---|---|---|---|---|---|---|---|---|---|---|---|
| | | –1 | –Std | –1 | –Std | –1 | –Std | –1 | –Std | –1 | –Std | |
| 2 mA | Slow | 2.206 | 2.596 | 2.678 | 3.15 | 2.64 | 3.106 | 4.935 | 5.805 | 4.74 | 5.576 | ns |
| 4 mA | Slow | 1.835 | 2.159 | 2.242 | 2.637 | 2.256 | 2.654 | 5.413 | 6.368 | 5.15 | 6.059 | ns |
| 6 mA | Slow | 1.709 | 2.01 | 2.132 | 2.508 | 2.167 | 2.549 | 5.813 | 6.838 | 5.499 | 6.469 | ns |
| 8 mA | Slow | 1.63 | 1.918 | 1.958 | 2.303 | 2.012 | 2.367 | 6.226 | 7.324 | 5.816 | 6.842 | ns |
| 12 mA | Slow | 1.648 | 1.939 | 1.86 | 2.187 | 1.921 | 2.259 | 6.519 | 7.669 | 6.027 | 7.09 | ns |

1 Delay increases with drive strength are inherent to built-in slew control circuitry for SSO management.

### 3.5.8 1.8V LVCMOS

LVCMOS 1.8 is a general standard for 1.8V applications and is supported in IGLOO 2 FPGAs and SmartFusion 2 SoC FPGAs in compliance to the JEDEC specification JESD8-7A.

**Minimum and Maximum DC/AC Input and Output Levels Specification**

**TABLE 3-47: LVCMOS 1.8V DC RECOMMENDED OPERATING CONDITIONS**

| Parameter | Symbol | Min. | Typ. | Max. | Unit |
|---|---|---|---|---|---|
| **LVCMOS 1.8V DC Recommended Operating Conditions** | | | | | |
| Supply voltage | $V_{DDI}$ | 1.710 | 1.8 | 1.89 | V |

**TABLE 3-48: LVCMOS 1.8V DC INPUT VOLTAGE SPECIFICATION**

| Parameter | Symbol | Min. | Max. | Unit |
|---|---|---|---|---|
| DC input logic high (for MSIOD and DDRIO I/O banks) | $V_{IH}$ (DC) | 0.65 × $V_{DDI}$ | 1.89 | V |
| DC input logic high (for MSIO I/O bank) | $V_{IH}$ (DC) | 0.65 × $V_{DDI}$ | 3.45 | V |
| DC input logic low | $V_{IL}$ (DC) | –0.3 | 0.35 × $V_{DDI}$ | V |
| Input current high[1] | $I_{IH}$ (DC) | — | — | — |
| Input current low[1] | $I_{IL}$ (DC) | — | — | — |

1 See Table 3-22.


© 2026 Microchip Technology Inc. and its subsidiaries

**TABLE 3-49: LVCMOS 1.8V DC OUTPUT VOLTAGE SPECIFICATION**

| Parameter | Symbol | Min. | Max. | Unit |
|---|---|---|---|---|
| DC output logic high | $V_{OH}$ | $V_{DDI}$ – 0.45 | — | V |
| DC output logic low | $V_{OL}$ | — | 0.45 | V |

**TABLE 3-50: LVCMOS 1.8V MINIMUM AND MAXIMUM AC SWITCHING SPEED**

| Parameter | Symbol | Max. | Unit | Conditions |
|---|---|---|---|---|
| Maximum data rate (for DDRIO I/O bank)[1] | $D_{MAX}$ | 400 | Mbps | AC loading: 17 pF load, maximum drive/slew |
| Maximum data rate (for MSIO I/O bank) | $D_{MAX}$ | 295 | Mbps | AC loading: 17 pF load, maximum drive/slew |
| Maximum data rate (for MSIOD I/O bank)[1] | $D_{MAX}$ | 400 | Mbps | AC loading: 17 pF load, maximum drive/slew |

1 Maximum Data Rate applies for Drive Strength 8 mA and above, All Slews.

**TABLE 3-51: LVCMOS 1.8V AC CALIBRATED IMPEDANCE OPTION**

| Parameter | Symbol | Typ. | Unit |
|---|---|---|---|
| Supported output driver calibrated impedance (for DDRIO I/O bank) | Rodt_cal | 75, 60, 50, 33, 25, 20 | Ω |

**TABLE 3-52: LVCMOS 1.8V AC TEST PARAMETER SPECIFICATIONS**

| Parameter | Symbol | Typ. | Unit |
|---|---|---|---|
| Measuring/trip point for data path | $V_{TRIP}$ | 0.9 | V |
| Resistance for enable path ($T_{ZH}$, $T_{ZL}$, $T_{HZ}$, $T_{LZ}$) | $R_{ENT}$ | 2k | Ω |
| Capacitive loading for enable path ($T_{ZH}$, $T_{ZL}$, $T_{HZ}$, $T_{LZ}$) | $C_{ENT}$ | 5 | pF |
| Capacitive loading for data path ($T_{DP}$) | $C_{LOAD}$ | 5 | pF |

**TABLE 3-53: LVCMOS 1.8 V TRANSMITTER DRIVE STRENGTH SPECIFICATIONS**

| Output Drive Selection | | | $V_{OH}$ (V) | $V_{OL}$ (V) | IOH (at $V_{OH}$) mA | IOL (at $V_{OL}$) mA |
|---|---|---|---|---|---|---|
| MSIO I/O Bank | MSIOD I/O Bank | DDRIO I/O Bank | Min. | Max. | | |
| 2 mA | 2 mA | 2 mA | $V_{DDI}$ –0.45 | 0.45 | 2 | 2 |
| 4 mA | 4 mA | 4 mA | $V_{DDI}$ –0.45 | 0.45 | 4 | 4 |
| 6 mA | 6 mA | 6 mA | $V_{DDI}$ –0.45 | 0.45 | 6 | 6 |
| 8 mA | 8 mA | 8 mA | $V_{DDI}$ –0.45 | 0.45 | 8 | 8 |
| 10 mA | 10 mA | 10 mA | $V_{DDI}$ –0.45 | 0.45 | 10 | 10 |
| 12 mA | — | 12 mA | $V_{DDI}$ –0.45 | 0.45 | 12 | 12 |
| — | — | 16 mA[1] | $V_{DDI}$ –0.45 | 0.45 | 16 | 16 |

1 16 mA drive strengths, all slews, meets LPDDR JEDEC electrical compliance.

**AC Switching Characteristics**

Worst commercial-case conditions: $T_J$ = 85 °C, $V_{DD}$ = 1.14 V, $V_{DDI}$ = 1.71V.

**TABLE 3-54: LVCMOS 1.8 V RECEIVER CHARACTERISTICS (INPUT BUFFERS)**

| | On-Die Termination (ODT) | $T_{PY}$ | | $T_{PYS}$ | | Unit |
|---|---|---|---|---|---|---|
| | | –1 | –Std | –1 | –Std | |
| **LVCMOS 1.8V (for DDRIO I/O bank with Fixed Codes)** | None | 1.968 | 2.315 | 2.099 | 2.47 | ns |

**TABLE 3-54: LVCMOS 1.8 V RECEIVER CHARACTERISTICS (INPUT BUFFERS) (CONTINUED)**

| | On-Die Termination (ODT) | $T_{PY}$ | | $T_{PYS}$ | | Unit |
|---|---|---|---|---|---|---|
| | | –1 | –Std | –1 | –Std | |
| LVCMOS 1.8V (for MSIO I/O bank) | None | 2.898 | 3.411 | 2.883 | 3.393 | ns |
| | 50 | 3.05 | 3.59 | 3.044 | 3.583 | ns |
| | 75 | 2.999 | 3.53 | 2.987 | 3.516 | ns |
| | 150 | 2.947 | 3.469 | 2.933 | 3.452 | ns |
| LVCMOS 1.8V (for MSIOD I/O bank) | None | 2.611 | 3.071 | 2.598 | 3.057 | ns |
| | 50 | 2.775 | 3.264 | 2.775 | 3.265 | ns |
| | 75 | 2.72 | 3.2 | 2.712 | 3.19 | ns |
| | 150 | 2.666 | 3.137 | 2.655 | 3.123 | ns |

**TABLE 3-55: LVCMOS 1.8V TRANSMITTER CHARACTERISTICS FOR DDRIO I/O BANK WITH FIXED CODE (OUTPUT AND TRISTATE BUFFERS)**

| Output Drive Selection | Slew Control | $T_{DP}$ | | $T_{ZL}$ | | $T_{ZH}$ | | $T_{HZ}$[1] | | $T_{LZ}$[1] | | Unit |
|---|---|---|---|---|---|---|---|---|---|---|---|---|
| | | –1 | –Std | –1 | –Std | –1 | –Std | –1 | –Std | –1 | –Std | |
| 2 mA | Slow | 4.234 | 4.981 | 3.646 | 4.29 | 4.245 | 4.995 | 4.908 | 5.774 | 4.434 | 5.216 | ns |
| | Medium | 3.824 | 4.498 | 3.282 | 3.861 | 3.834 | 4.511 | 4.625 | 5.441 | 4.116 | 4.843 | ns |
| | Medium fast | 3.627 | 4.267 | 3.111 | 3.66 | 3.637 | 4.279 | 4.481 | 5.272 | 3.984 | 4.687 | ns |
| | Fast | 3.605 | 4.241 | 3.097 | 3.644 | 3.615 | 4.253 | 4.472 | 5.262 | 3.973 | 4.674 | ns |
| 4 mA | Slow | 3.923 | 4.615 | 3.314 | 3.9 | 3.918 | 4.61 | 5.403 | 6.356 | 4.894 | 5.757 | ns |
| | Medium | 3.518 | 4.138 | 2.961 | 3.484 | 3.515 | 4.135 | 5.121 | 6.025 | 4.561 | 5.366 | ns |
| | Medium fast | 3.321 | 3.907 | 2.783 | 3.275 | 3.317 | 3.903 | 4.966 | 5.843 | 4.426 | 5.206 | ns |
| | Fast | 3.301 | 3.883 | 2.77 | 3.259 | 3.296 | 3.878 | 4.957 | 5.831 | 4.417 | 5.196 | ns |
| 6 mA | Slow | 3.71 | 4.364 | 3.104 | 3.652 | 3.702 | 4.355 | 5.62 | 6.612 | 5.08 | 5.977 | ns |
| | Medium | 3.333 | 3.921 | 2.779 | 3.27 | 3.325 | 3.913 | 5.346 | 6.289 | 4.777 | 5.62 | ns |
| | Medium fast | 3.155 | 3.712 | 2.62 | 3.083 | 3.146 | 3.702 | 5.21 | 6.13 | 4.657 | 5.479 | ns |
| | Fast | 3.134 | 3.688 | 2.608 | 3.068 | 3.125 | 3.677 | 5.202 | 6.12 | 4.648 | 5.468 | ns |
| 8 mA | Slow | 3.619 | 4.258 | 3.007 | 3.538 | 3.607 | 4.244 | 5.815 | 6.841 | 5.249 | 6.175 | ns |
| | Medium | 3.246 | 3.819 | 2.686 | 3.16 | 3.236 | 3.807 | 5.542 | 6.52 | 4.936 | 5.807 | ns |
| | Medium fast | 3.066 | 3.607 | 2.525 | 2.971 | 3.054 | 3.593 | 5.405 | 6.359 | 4.811 | 5.66 | ns |
| | Fast | 3.046 | 3.584 | 2.513 | 2.957 | 3.034 | 3.57 | 5.401 | 6.353 | 4.803 | 5.651 | ns |
| 10 mA | Slow | 3.498 | 4.115 | 2.878 | 3.386 | 3.481 | 4.096 | 6.046 | 7.113 | 5.444 | 6.404 | ns |
| | Medium | 3.138 | 3.692 | 2.569 | 3.023 | 3.126 | 3.678 | 5.782 | 6.803 | 5.129 | 6.034 | ns |
| | Medium fast | 2.966 | 3.489 | 2.414 | 2.841 | 2.951 | 3.472 | 5.666 | 6.665 | 5.013 | 5.897 | ns |
| | Fast | 2.945 | 3.464 | 2.401 | 2.826 | 2.93 | 3.448 | 5.659 | 6.658 | 5.003 | 5.886 | ns |
| 12 mA | Slow | 3.417 | 4.02 | 2.807 | 3.303 | 3.401 | 4.002 | 6.083 | 7.156 | 5.464 | 6.428 | ns |
| | Medium | 3.076 | 3.618 | 2.519 | 2.964 | 3.063 | 3.604 | 5.828 | 6.856 | 5.176 | 6.089 | ns |
| | Medium fast | 2.913 | 3.427 | 2.376 | 2.795 | 2.898 | 3.41 | 5.725 | 6.736 | 5.072 | 5.966 | ns |
| | Fast | 2.894 | 3.405 | 2.362 | 2.78 | 2.879 | 3.388 | 5.715 | 6.724 | 5.064 | 5.957 | ns |
| 16 mA | Slow | 3.366 | 3.96 | 2.751 | 3.237 | 3.348 | 3.939 | 6.226 | 7.324 | 5.576 | 6.56 | ns |
| | Medium | 3.03 | 3.565 | 2.47 | 2.906 | 3.017 | 3.55 | 5.981 | 7.036 | 5.282 | 6.214 | ns |
| | Medium fast | 2.87 | 3.377 | 2.328 | 2.739 | 2.854 | 3.358 | 5.895 | 6.935 | 5.18 | 6.094 | ns |
| | Fast | 2.853 | 3.357 | 2.314 | 2.723 | 2.837 | 3.338 | 5.889 | 6.929 | 5.177 | 6.09 | ns |


© 2026 Microchip Technology Inc. and its subsidiaries

1 Delay increases with drive strength are inherent to built-in slew control circuitry for SSO management.

**TABLE 3-56: LVCMOS 1.8V TRANSMITTER CHARACTERISTICS FOR MSIO I/O BANK**

| Output Drive Selection | Slew Control | $T_{DP}$ | | $T_{ZL}$ | | $T_{ZH}$ | | $T_{HZ}$[1] | | $T_{LZ}$[1] | | Unit |
|---|---|---|---|---|---|---|---|---|---|---|---|---|
| | | –1 | –Std | –1 | –Std | –1 | –Std | –1 | –Std | –1 | –Std | |
| 2 mA | Slow | 3.441 | 4.047 | 4.165 | 4.9 | 4.413 | 5.192 | 4.891 | 5.755 | 5.138 | 6.044 | ns |
| 4 mA | Slow | 3.218 | 3.786 | 3.642 | 4.284 | 3.941 | 4.636 | 5.665 | 6.665 | 5.568 | 6.551 | ns |
| 6 mA | Slow | 3.141 | 3.694 | 3.501 | 4.118 | 3.823 | 4.498 | 6.587 | 7.75 | 6.032 | 7.096 | ns |
| 8 mA | Slow | 3.165 | 3.723 | 3.319 | 3.904 | 3.654 | 4.298 | 6.898 | 8.115 | 6.216 | 7.313 | ns |
| 10 mA | Slow | 3.202 | 3.767 | 3.278 | 3.857 | 3.616 | 4.254 | 7.25 | 8.529 | 6.435 | 7.571 | ns |
| 12 mA | Slow | 3.277 | 3.855 | 3.175 | 3.736 | 3.519 | 4.139 | 7.392 | 8.697 | 6.538 | 7.692 | ns |

1 Delay increases with drive strength are inherent to built-in slew control circuitry for SSO management.

**TABLE 3-57: LVCMOS 1.8V TRANSMITTER CHARACTERISTICS FOR MSIOD I/O BANK**

| Output Drive Selection | Slew Control | $T_{DP}$ | | $T_{ZL}$ | | $T_{ZH}$ | | $T_{HZ}$[1] | | $T_{LZ}$[1] | | Unit |
|---|---|---|---|---|---|---|---|---|---|---|---|---|
| | | –1 | –Std | –1 | –Std | –1 | –Std | –1 | –Std | –1 | –Std | |
| 2 mA | Slow | 2.725 | 3.206 | 3.316 | 3.901 | 3.484 | 4.099 | 5.204 | 6.123 | 4.997 | 5.88 | ns |
| 4 mA | Slow | 2.242 | 2.638 | 2.777 | 3.267 | 2.947 | 3.466 | 5.729 | 6.74 | 5.448 | 6.41 | ns |
| 6 mA | Slow | 1.995 | 2.347 | 2.466 | 2.901 | 2.63 | 3.094 | 6.372 | 7.496 | 5.987 | 7.043 | ns |
| 8 mA | Slow | 2.001 | 2.354 | 2.44 | 2.87 | 2.6 | 3.058 | 6.633 | 7.804 | 6.193 | 7.286 | ns |
| 10 mA | Slow | 2.025 | 2.382 | 2.312 | 2.719 | 2.47 | 2.906 | 6.94 | 8.165 | 6.412 | 7.544 | ns |

1 Delay increases with drive strength are inherent to built-in slew control circuitry for SSO management.

### 3.5.9 1.5V LVCMOS

LVCMOS 1.5 is a general standard for 1.5V applications and is supported in IGLOO 2 FPGAs and SmartFusion 2 SoC FPGAs in compliance to the JEDEC specification JESD8-11A.

**Minimum and Maximum DC/AC Input and Output Levels Specification**

**TABLE 3-58: LVCMOS 1.5 $V_{DC}$ RECOMMENDED OPERATING CONDITIONS**

| Parameter | Symbol | Min. | Typ. | Max. | Unit |
|---|---|---|---|---|---|
| Supply voltage | $V_{DDI}$ | 1.425 | 1.5 | 1.575 | V |

**TABLE 3-59: LVCMOS 1.5 $V_{DC}$ INPUT VOLTAGE SPECIFICATION**

| Parameter | Symbol | Min. | Max. | Unit |
|---|---|---|---|---|
| DC input logic high for (MSIOD and DDRIO I/O banks) | $V_{IH}$ (DC) | 0.65 × $V_{DDI}$ | 1.575 | V |
| DC input logic high (for MSIO I/O bank) | $V_{IH}$ (DC) | 0.65 × $V_{DDI}$ | 3.45 | V |
| DC input logic low | $V_{IL}$ (DC) | –0.3 | 0.35 × $V_{DDI}$ | V |
| Input current high[1] | $I_{IH}$ (DC) | — | — | — |
| Input current low[1] | $I_{IL}$ (DC | — | — | — |

1 See Table 3-22.

**TABLE 3-60: LVCMOS 1.5 $V_{DC}$ OUTPUT VOLTAGE SPECIFICATION**

| Parameter | Symbol | Min. | Max. | Unit |
|---|---|---|---|---|
| DC output logic high | VOH | $V_{DDI}$ × 0.75 | — | V |

**TABLE 3-60: LVCMOS 1.5 $V_{DC}$ OUTPUT VOLTAGE SPECIFICATION**

| | | | | |
|---|---|---|---|---|
| DC output logic low | VOL | — | $V_{DDI}$ × 0.25 | V |

**TABLE 3-61: LVCMOS 1.5V AC MINIMUM AND MAXIMUM SWITCHING SPEED**

| Parameter | Symbol | Max. | Unit | Conditions |
|---|---|---|---|---|
| Maximum data rate (for DDRIO I/O bank) | $D_{MAX}$ | 235 | Mbps | AC loading: 17 pF load, maximum drive/slew |
| Maximum data rate (for MSIO I/O bank) | $D_{MAX}$ | 160 | Mbps | AC loading: 17 pF load, maximum drive/slew |
| Maximum data rate (for MSIOD I/O bank) | $D_{MAX}$ | 220 | Mbps | AC loading: 17 pF load, maximum drive/slew |

**TABLE 3-62: LVCMOS 1.5V AC CALIBRATED IMPEDANCE OPTION**

| Parameter | Symbol | Typ. | Unit |
|---|---|---|---|
| Supported output driver calibrated impedance (for DDRIO I/O bank) | RODT_-CAL | 75, 60, 50, 40 | Ω |

**TABLE 3-63: LVCMOS 1.5V AC TEST PARAMETER SPECIFICATIONS**

| Parameter | Symbol | Typ. | Unit |
|---|---|---|---|
| Measuring/trip point | $V_{TRIP}$ | 0.75 | V |
| Resistance for enable path ($T_{ZH}$, $T_{ZL}$, $T_{HZ}$, $T_{LZ}$) | $R_{ENT}$ | 2K | Ω |
| Capacitive loading for enable path ($T_{ZH}$, $T_{ZL}$, $T_{HZ}$, $T_{LZ}$) | $C_{ENT}$ | 5 | pF |
| Capacitive loading for data path ($T_{DP}$) | $C_{LOAD}$ | 5 | pF |

**TABLE 3-64: LVCMOS 1.5V TRANSMITTER DRIVE STRENGTH SPECIFICATIONS**

| Output Drive Selection | | | $V_{OH}$ (V) | $V_{OL}$ (V) | IOH (at $V_{OH}$) mA | IOL (at $V_{OL}$) mA |
|---|---|---|---|---|---|---|
| MSIO I/O Bank | MSIOD I/O Bank | DDRIO I/O Bank | Min. | Max. | | |
| 2 mA | 2 mA | 2 mA | $V_{DDI}$ × 0.75 | $V_{DDI}$ × 0.25 | 2 | 2 |
| 4 mA | 4 mA | 4 mA | $V_{DDI}$ × 0.75 | $V_{DDI}$ × 0.25 | 4 | 4 |
| 6 mA | 6 mA | 6 mA | $V_{DDI}$ × 0.75 | $V_{DDI}$ × 0.25 | 6 | 6 |
| 8 mA | — | 8 mA | $V_{DDI}$ × 0.75 | $V_{DDI}$ × 0.25 | 8 | 8 |
| — | — | 10 mA | $V_{DDI}$ × 0.75 | $V_{DDI}$ × 0.25 | 10 | 10 |
| — | — | 12 mA | $V_{DDI}$ × 0.75 | $V_{DDI}$ × 0.25 | 12 | 12 |

**Note:** For a detailed I/V curve, use the corresponding IBIS models:

- For IGLOO 2: https://www.microchip.com/en-us/products/fpgas-and-plds/fpgas/igloo-2-fpgas#Documentation
- For SmartFusion 2: https://www.microchip.com/en-us/products/fpgas-and-plds/system-on-chip-fpgas/smartfusion-2-fpgas#Documentation

**AC Switching Characteristics**

Worst commercial-case conditions: $T_J$ = 85 °C, $V_{DD}$ = 1.14 V, $V_{DDI}$ = 1.425V.

**TABLE 3-65: LVCMOS 1.5V RECEIVER CHARACTERISTICS FOR DDRIO I/O BANK WITH FIXED CODES (INPUT BUFFERS)**

| On-Die Termination (ODT) | $T_{PY}$ | | $T_{PYS}$ | | Unit |
|---|---|---|---|---|---|
| | –1 | –Std | –1 | –Std | |
| None | 2.051 | 2.413 | 2.086 | 2.455 | ns |


© 2026 Microchip Technology Inc. and its subsidiaries

**TABLE 3-66: LVCMOS 1.5V RECEIVER CHARACTERISTICS FOR MSIO I/O BANK (INPUT BUFFERS)**

| On-Die Termination (ODT) | $T_{PY}$ | | $T_{PYS}$ | | Unit |
|---|---|---|---|---|---|
| | –1 | –Std | –1 | –Std | |
| None | 3.311 | 3.896 | 3.285 | 3.865 | ns |
| 50 | 3.654 | 4.299 | 3.623 | 4.263 | ns |
| 75 | 3.533 | 4.156 | 3.501 | 4.119 | ns |
| 150 | 3.415 | 4.018 | 3.388 | 3.986 | ns |

**TABLE 3-67: LVCMOS 1.5V RECEIVER CHARACTERISTICS FOR MSIOD I/O BANK (INPUT BUFFERS)**

| On-Die Termination (ODT) | $T_{PY}$ | | $T_{PYS}$ | | Unit |
|---|---|---|---|---|---|
| | –1 | –Std | –1 | –Std | |
| None | 2.959 | 3.481 | 2.93 | 3.447 | ns |
| 50 | 3.298 | 3.88 | 3.268 | 3.845 | ns |
| 75 | 3.162 | 3.719 | 3.128 | 3.68 | ns |
| 150 | 3.053 | 3.592 | 3.021 | 3.554 | ns |

**TABLE 3-68: LVCMOS 1.5V TRANSMITTER CHARACTERISTICS FOR DDRIO I/O BANK (OUTPUT AND TRISTATE BUFFERS)**

| Output Drive Selection | Slew Control | $T_{DP}$ | | $T_{ZL}$ | | $T_{ZH}$ | | $T_{HZ}$[1] | | $T_{LZ}$[1] | | Unit |
|---|---|---|---|---|---|---|---|---|---|---|---|---|
| | | –1 | –Std | –1 | –Std | –1 | –Std | –1 | –Std | –1 | –Std | |
| 2 mA | Slow | 5.122 | 6.026 | 4.31 | 5.07 | 5.145 | 6.052 | 5.258 | 6.186 | 4.672 | 5.496 | ns |
| | Medium | 4.58 | 5.389 | 3.86 | 4.54 | 4.6 | 5.411 | 4.977 | 5.855 | 4.357 | 5.126 | ns |
| | Medium fast | 4.323 | 5.086 | 3.629 | 4.269 | 4.341 | 5.107 | 4.804 | 5.652 | 4.228 | 4.974 | ns |
| | Fast | 4.296 | 5.054 | 3.609 | 4.245 | 4.314 | 5.075 | 4.791 | 5.636 | 4.219 | 4.963 | ns |
| 4 mA | Slow | 4.449 | 5.235 | 3.707 | 4.361 | 4.443 | 5.227 | 6.058 | 7.127 | 5.458 | 6.421 | ns |
| | Medium | 3.961 | 4.66 | 3.264 | 3.839 | 3.954 | 4.651 | 5.778 | 6.797 | 5.116 | 6.018 | ns |
| | Medium fast | 3.729 | 4.387 | 3.043 | 3.579 | 3.72 | 4.376 | 5.63 | 6.624 | 4.981 | 5.86 | ns |
| | Fast | 3.704 | 4.358 | 3.027 | 3.56 | 3.695 | 4.347 | 5.624 | 6.617 | 4.973 | 5.851 | ns |
| 6 mA | Slow | 4.244 | 4.993 | 3.465 | 4.076 | 4.233 | 4.979 | 6.39 | 7.518 | 5.736 | 6.748 | ns |
| | Medium | 3.774 | 4.44 | 3.05 | 3.587 | 3.762 | 4.426 | 6.114 | 7.193 | 5.397 | 6.35 | ns |
| | Medium fast | 3.544 | 4.17 | 2.839 | 3.339 | 3.529 | 4.152 | 5.978 | 7.033 | 5.27 | 6.2 | ns |
| | Fast | 3.519 | 4.14 | 2.82 | 3.317 | 3.504 | 4.122 | 5.965 | 7.017 | 5.259 | 6.187 | ns |
| 8 mA | Slow | 4.099 | 4.823 | 3.311 | 3.894 | 4.087 | 4.807 | 6.584 | 7.746 | 5.854 | 6.888 | ns |
| | Medium | 3.656 | 4.301 | 2.927 | 3.443 | 3.642 | 4.284 | 6.311 | 7.425 | 5.553 | 6.533 | ns |
| | Medium fast | 3.437 | 4.044 | 2.731 | 3.213 | 3.42 | 4.023 | 6.182 | 7.273 | 5.435 | 6.394 | ns |
| | Fast | 3.41 | 4.012 | 2.715 | 3.193 | 3.393 | 3.991 | 6.178 | 7.269 | 5.425 | 6.383 | ns |

**TABLE 3-68: LVCMOS 1.5V TRANSMITTER CHARACTERISTICS FOR DDRIO I/O BANK (OUTPUT AND TRISTATE BUFFERS) (CONTINUED)**

| Output Drive Selection | Slew Control | $T_{DP}$ | | $T_{ZL}$ | | $T_{ZH}$ | | $T_{HZ}$[1] | | $T_{LZ}$[1] | | Unit |
|---|---|---|---|---|---|---|---|---|---|---|---|---|
| | | –1 | –Std | –1 | –Std | –1 | –Std | –1 | –Std | –1 | –Std | |
| 10 mA | Slow | 4.029 | 4.74 | 3.238 | 3.809 | 4.015 | 4.723 | 6.732 | 7.921 | 5.965 | 7.018 | ns |
| | Medium | 3.601 | 4.237 | 2.867 | 3.372 | 3.586 | 4.218 | 6.473 | 7.615 | 5.669 | 6.669 | ns |
| | Medium fast | 3.384 | 3.981 | 2.672 | 3.143 | 3.365 | 3.958 | 6.351 | 7.471 | 5.55 | 6.529 | ns |
| | Fast | 3.357 | 3.949 | 2.655 | 3.123 | 3.338 | 3.927 | 6.345 | 7.464 | 5.54 | 6.518 | ns |
| 12 mA | Slow | 3.974 | 4.675 | 3.196 | 3.759 | 3.958 | 4.656 | 6.842 | 8.049 | 6.068 | 7.139 | ns |
| | Medium | 3.55 | 4.176 | 2.827 | 3.326 | 3.534 | 4.157 | 6.584 | 7.746 | 5.751 | 6.766 | ns |
| | Medium fast | 3.345 | 3.935 | 2.638 | 3.103 | 3.325 | 3.911 | 6.488 | 7.633 | 5.641 | 6.637 | ns |
| | Fast | 3.316 | 3.902 | 2.621 | 3.083 | 3.297 | 3.878 | 6.486 | 7.63 | 5.626 | 6.619 | ns |

1 Delay increases with drive strength are inherent to built-in slew control circuitry for SSO management.

**TABLE 3-69: LVCMOS 1.5V TRANSMITTER CHARACTERISTICS FOR MSIO I/O BANK (OUTPUT AND TRISTATE BUFFERS)**

| Output Drive Selection | Slew Control | $T_{DP}$ | | $T_{ZL}$ | | $T_{ZH}$ | | $T_{HZ}$[1] | | $T_{LZ}$[1] | | Unit |
|---|---|---|---|---|---|---|---|---|---|---|---|---|
| | | –1 | –Std | –1 | –Std | –1 | –Std | –1 | –Std | –1 | –Std | |
| 2 mA | Slow | 4.423 | 5.203 | 5.397 | 6.35 | 5.686 | 6.69 | 5.609 | 6.599 | 5.561 | 6.542 | ns |
| 4 mA | Slow | 4.05 | 4.765 | 4.503 | 5.298 | 4.92 | 5.788 | 7.358 | 8.657 | 6.525 | 7.677 | ns |
| 6 mA | Slow | 4.081 | 4.801 | 4.259 | 5.012 | 4.699 | 5.528 | 7.659 | 9.011 | 6.709 | 7.893 | ns |
| 8 mA | Slow | 4.234 | 4.98 | 4.068 | 4.786 | 4.521 | 5.319 | 8.218 | 9.668 | 7.05 | 8.294 | ns |

1 Delay increases with drive strength are inherent to built-in slew control circuitry for SSO management.

**TABLE 3-70: LVCMOS 1.5V TRANSMITTER CHARACTERISTICS FOR MSIOD I/O BANK (OUTPUT AND TRISTATE BUFFERS)**

| Output Drive Selection | Slew Control | $T_{DP}$ | | $T_{ZL}$ | | $T_{ZH}$ | | $T_{HZ}$[1] | | $T_{LZ}$[1] | | Unit |
|---|---|---|---|---|---|---|---|---|---|---|---|---|
| | | –1 | –Std | –1 | –Std | –1 | –Std | –1 | –Std | –1 | –Std | |
| 2 mA | Slow | 2.735 | 3.218 | 3.371 | 3.966 | 3.618 | 4.257 | 6.03 | 7.095 | 5.705 | 6.712 | ns |
| 4 mA | Slow | 2.426 | 2.854 | 2.992 | 3.521 | 3.221 | 3.79 | 6.738 | 7.927 | 6.298 | 7.41 | ns |
| 6 mA | Slow | 2.433 | 2.862 | 2.81 | 3.306 | 3.031 | 3.566 | 7.123 | 8.38 | 6.596 | 7.76 | ns |

1 Delay increases with drive strength are inherent to built-in slew control circuitry for SSO management.

### 3.5.10 1.2V LVCMOS

LVCMOS 1.2 is a general standard for 1.2V applications and is supported in IGLOO 2 FPGAs and SmartFusion 2 SoC FPGAs in compliance to the JEDEC specification JESD8-12A.

**Minimum and Maximum DC/AC Input and Output Levels Specification**

**TABLE 3-71: LVCMOS 1.2V DC RECOMMENDED DC OPERATING CONDITIONS**

| Parameter | Symbol | Min. | Typ. | Max. | Unit |
|---|---|---|---|---|---|
| Supply voltage | $V_{DDI}$ | 1.140 | 1.2 | 1.26 | V |


© 2026 Microchip Technology Inc. and its subsidiaries

**TABLE 3-72: LVCMOS 1.2V DC INPUT VOLTAGE SPECIFICATION**

| Parameter | Symbol | Min. | Max. | Unit |
|---|---|---|---|---|
| DC input logic high (for MSIOD and DDRIO I/O banks) | $V_{IH}$ (DC) | 0.65 × $V_{DDI}$ | 1.26 | V |
| DC input logic high (for MSIO I/O bank) | $V_{IH}$ (DC) | 0.65 × $V_{DDI}$ | 3.45 | V |
| DC input logic low | $V_{IL}$ (DC) | –0.3 | 0.35 × $V_{DDI}$ | V |
| Input current high[1] | $I_{IH}$ (DC) | — | — | — |
| Input current low[1] | $I_{IL}$ (DC) | — | — | — |

1 See Table 3-22.

**TABLE 3-73: LVCMOS 1.2V DC OUTPUT VOLTAGE SPECIFICATION**

| Parameter | Symbol | Min. | Max. | Unit |
|---|---|---|---|---|
| DC output logic high | $V_{OH}$ | $V_{DDI}$ × 0.75 | — | V |
| DC output logic low | $V_{OL}$ | — | $V_{DDI}$ × 0.25 | V |

**TABLE 3-74: LVCMOS 1.2V MINIMUM AND MAXIMUM AC SWITCHING SPEED**

| Parameter | Symbol | Max. | Unit | Conditions |
|---|---|---|---|---|
| Maximum data rate (for DDRIO I/O bank) | $D_{MAX}$ | 200 | Mbps | AC loading: 17 pF load, maximum drive/slew |
| Maximum data rate (for MSIO I/O bank) | $D_{MAX}$ | 120 | Mbps | AC loading: 17 pF load, maximum drive/slew |
| Maximum data rate (for MSIOD I/O bank) | $D_{MAX}$ | 160 | Mbps | AC loading: 17 pF load, maximum drive/slew |

**TABLE 3-75: LVCMOS 1.2V AC CALIBRATED IMPEDANCE OPTION**

| Parameter | Symbol | Typ. | Unit |
|---|---|---|---|
| Supported output driver calibrated impedance (for DDRIO I/O bank) | RODT_CAL | 75, 60, 50, 40 | Ω |

**TABLE 3-76: LVCMOS 1.2V AC TEST PARAMETER SPECIFICATIONS**

| Parameter | Symbol | Typ. | Unit |
|---|---|---|---|
| Measuring/trip point | $V_{TRIP}$ | 0.6 | V |
| Resistance for enable path ($T_{ZH}$, $T_{ZL}$, $T_{HZ}$, $T_{LZ}$) | $R_{ENT}$ | 2K | Ω |
| Capacitive loading for enable path ($T_{ZH}$, $T_{ZL}$, $T_{HZ}$, $T_{LZ}$) | $C_{ENT}$ | 5 | pF |
| Capacitive loading for data path ($T_{DP}$) | $C_{LOAD}$ | 5 | pF |

**TABLE 3-77: LVCMOS 1.2V TRANSMITTER DRIVE STRENGTH SPECIFICATIONS**

| Output Drive Selection | | | $V_{OH}$ (V) | $V_{OL}$ (V) | IOH (at $V_{OH}$) mA | IOL (at $V_{OL}$) mA |
|---|---|---|---|---|---|---|
| MSIO I/O Bank | MSIOD I/O Bank | DDRIO I/O Bank | Min. | Max. | | |
| 2 mA | 2 mA | 2 mA | $V_{DDI}$ × 0.75 | $V_{DDI}$ × 0.25 | 2 | 2 |
| 4 mA | 4 mA | 4 mA | $V_{DDI}$ × 0.75 | $V_{DDI}$ × 0.25 | 4 | 4 |
| | | 6 mA | $V_{DDI}$ × 0.75 | $V_{DDI}$ × 0.25 | 6 | 6 |

**Note:** For a detailed I/V curve, use the corresponding IBIS models:

- For IGLOO 2: https://www.microchip.com/en-us/products/fpgas-and-plds/fpgas/igloo-2-fpgas#Documentation.
- For SmartFusion 2: https://www.microchip.com/en-us/products/fpgas-and-plds/system-on-chip-fpgas/smartfusion-2-fpgas#Documentation.

**AC Switching Characteristics**

Worst commercial-case conditions: $T_J$ = 85 °C, $V_{DD}$ = 1.14 V, $V_{DDI}$ = 1.14V.

**TABLE 3-78: LVCMOS 1.2V RECEIVER CHARACTERISTICS FOR DDRIO I/O BANK WITH FIXED CODE (INPUT BUFFERS)**

| On-Die Termination (ODT) | $T_{PY}$ | | $T_{PYS}$ | | Unit |
|---|---|---|---|---|---|
| | –1 | –Std | –1 | –Std | |
| None | 2.448 | 2.88 | 2.466 | 2.901 | ns |

**TABLE 3-79: LVCMOS 1.2V RECEIVER CHARACTERISTICS FOR MSIO I/O BANK (INPUT BUFFERS)**

| On-Die Termination ODT) | $T_{PY}$ | | $T_{PYS}$ | | Unit |
|---|---|---|---|---|---|
| | –1 | –Std | –1 | –Std | |
| None | 4.714 | 5.545 | 4.675 | 5.5 | ns |
| 50 | 6.668 | 7.845 | 6.579 | 7.74 | ns |
| 75 | 5.832 | 6.862 | 5.76 | 6.777 | ns |
| 150 | 5.162 | 6.073 | 5.111 | 6.014 | ns |

**TABLE 3-80: LVCMOS 1.2V RECEIVER CHARACTERISTICS FOR MSIOD I/O BANK (INPUT BUFFERS)**

| On-Die Termination (ODT) | $T_{PY}$ | | $T_{PYS}$ | | Unit |
|---|---|---|---|---|---|
| | –1 | –Std | –1 | –Std | |
| None | 4.154 | 4.887 | 4.114 | 4.84 | ns |
| 50 | 6.918 | 8.139 | 6.806 | 8.008 | ns |
| 75 | 5.613 | 6.603 | 5.533 | 6.509 | ns |
| 150 | 4.716 | 5.549 | 4.657 | 5.479 | ns |

**TABLE 3-81: LVCMOS 1.2V TRANSMITTER CHARACTERISTICS FOR DDRIO I/O BANK (OUTPUT AND TRISTATE BUFFERS)**

| Output Drive Selection | Slew Control | $T_{DP}$ | | $T_{ZL}$ | | $T_{ZH}$ | | $T_{HZ}$[1] | | $T_{LZ}$[1] | | Unit |
|---|---|---|---|---|---|---|---|---|---|---|---|---|
| | | –1 | –Std | –1 | –Std | –1 | –Std | –1 | –Std | –1 | –Std | |
| 2 mA | Slow | 6.713 | 7.897 | 5.362 | 6.308 | 6.723 | 7.909 | 7.233 | 8.51 | 6.375 | 7.499 | ns |
| | Medium | 5.912 | 6.955 | 4.616 | 5.43 | 5.915 | 6.959 | 6.887 | 8.102 | 6.009 | 7.069 | ns |
| | Medium fast | 5.5 | 6.469 | 4.231 | 4.978 | 5.5 | 6.471 | 6.672 | 7.849 | 5.835 | 6.865 | ns |
| | Fast | 5.462 | 6.426 | 4.194 | 4.935 | 5.463 | 6.427 | 6.646 | 7.819 | 5.828 | 6.857 | ns |
| 4 mA | Slow | 6.109 | 7.186 | 4.708 | 5.539 | 6.098 | 7.174 | 8.005 | 9.418 | 7.033 | 8.274 | ns |
| | Medium | 5.355 | 6.299 | 4.034 | 4.746 | 5.338 | 6.28 | 7.637 | 8.985 | 6.672 | 7.849 | ns |
| | Medium fast | 4.953 | 5.826 | 3.685 | 4.336 | 4.932 | 5.802 | 7.44 | 8.752 | 6.499 | 7.646 | ns |
| | Fast | 4.911 | 5.777 | 3.658 | 4.303 | 4.89 | 5.754 | 7.427 | 8.737 | 6.488 | 7.632 | ns |
| 6 mA | Slow | 5.89 | 6.929 | 4.506 | 5.301 | 5.874 | 6.911 | 8.337 | 9.808 | 7.315 | 8.605 | ns |
| | Medium | 5.176 | 6.089 | 3.862 | 4.543 | 5.155 | 6.065 | 7.986 | 9.394 | 6.943 | 8.168 | ns |
| | Medium fast | 4.792 | 5.637 | 3.523 | 4.145 | 4.765 | 5.606 | 7.808 | 9.186 | 6.775 | 7.97 | ns |
| | Fast | 4.754 | 5.593 | 3.486 | 4.101 | 4.728 | 5.563 | 7.777 | 9.149 | 6.769 | 7.963 | ns |


© 2026 Microchip Technology Inc. and its subsidiaries

1 Delay increases with drive strength are inherent to built-in slew control circuitry for SSO management.

**TABLE 3-82: LVCMOS 1.2V TRANSMITTER CHARACTERISTICS FOR MSIO I/O BANK (OUTPUT AND TRISTATE BUFFERS)**

| Output Drive Selection | Slew Control | $T_{DP}$ | | $T_{ZL}$ | | $T_{ZH}$ | | $T_{HZ}$[1] | | $T_{LZ}$[1] | | Unit |
|---|---|---|---|---|---|---|---|---|---|---|---|---|
| | | –1 | –Std | –1 | –Std | –1 | –Std | –1 | –Std | –1 | –Std | |
| 2 mA | Slow | 6.746 | 7.937 | 7.458 | 8.774 | 8.172 | 9.614 | 9.867 | 11.608 | 8.393 | 9.874 | ns |
| 4 mA | Slow | 7.068 | 8.315 | 6.678 | 7.857 | 7.474 | 8.793 | 10.986 | 12.924 | 9.043 | 10.638 | ns |

1 Delay increases with drive strength are inherent to built-in slew control circuitry for SSO management.

**TABLE 3-83: LVCMOS 1.2V TRANSMITTER CHARACTERISTICS FOR MSIOD I/O BANK (OUTPUT AND TRISTATE BUFFERS)**

| Output Drive Selection | Slew Control | $T_{DP}$ | | $T_{ZL}$ | | $T_{ZH}$ | | $T_{HZ}$[1] | | $T_{LZ}$[1] | | Unit |
|---|---|---|---|---|---|---|---|---|---|---|---|---|
| | | –1 | –Std | –1 | –Std | –1 | –Std | –1 | –Std | –1 | –Std | |
| 2 mA | Slow | 3.883 | 4.568 | 4.868 | 5.726 | 5.329 | 6.269 | 7.994 | 9.404 | 7.527 | 8.855 | ns |
| 4 mA | Slow | 3.774 | 4.44 | 4.188 | 4.926 | 4.613 | 5.426 | 8.972 | 10.555 | 8.315 | 9.782 | ns |

1 Delay increases with drive strength are inherent to built-in slew control circuitry for SSO management.

### 3.5.11 3.3V PCI/PCIX

Peripheral Component Interface (PCI) for 3.3V standards specify support for 33 MHz and 66 MHz PCI bus applications.

**Minimum and Maximum DC/AC Input and Output Levels Specification (Applicable to MSIO Bank Only)**

**TABLE 3-84: PCI/PCI-X DC RECOMMENDED OPERATING CONDITIONS**

| Parameter | Symbol | Min. | Typ. | Max. | Unit |
|---|---|---|---|---|---|
| Supply voltage | $V_{DDI}$ | 3.15 | 3.3 | 3.45 | V |

**TABLE 3-85: PCI/PCI-X DC INPUT VOLTAGE SPECIFICATION**

| Parameter | Symbol | Min. | Max. | Unit |
|---|---|---|---|---|
| DC input voltage | $V_I$ | 0 | 3.45 | V |
| Input current high[1] | $I_{IH}$(DC) | — | — | — |
| Input current low[1] | $I_{IL}$(DC) | — | — | — |

1 See Table 3-22.

**TABLE 3-86: PCI/PCI-X DC OUTPUT VOLTAGE SPECIFICATION**

| Parameter | Symbol | Min. | Typ. | Max. | Unit |
|---|---|---|---|---|---|
| DC output logic high | $V_{OH}$ | Per PCI specification | | | V |
| DC output logic low | $V_{OL}$ | Per PCI specification | | | V |

**TABLE 3-87: PCI/PCI-X MINIMUM AND MAXIMUM AC SWITCHING SPEED**

| Parameter | Symbol | Max. | Unit | Conditions |
|---|---|---|---|---|
| Maximum data rate (MSIO I/O bank) | $D_{MAX}$ | 630 | Mbps | AC Loading: per JEDEC specifications |

**TABLE 3-88: PCI/PCI-X AC TEST PARAMETER SPECIFICATIONS**

| Parameter | Symbol | Typ. | Unit |
|---|---|---|---|

**TABLE 3-88: PCI/PCI-X AC TEST PARAMETER SPECIFICATIONS**

| | | | |
|---|---|---|---|
| Measuring/trip point for data path (falling edge) | $V_{TRIP}$ | 0.615 × $V_{DDI}$ | V |
| Measuring/trip point for data path (rising edge) | $V_{TRIP}$ | 0.285 × $V_{DDI}$ | V |
| Resistance for data test path | RTT_TEST | 25 | Ω |
| Resistance for enable path ($T_{ZH}$, $T_{ZL}$, $T_{HZ}$, $T_{LZ}$) | $R_{ENT}$ | 2K | Ω |
| Capacitive loading for enable path ($T_{ZH}$, $T_{ZL}$, $T_{HZ}$, $T_{LZ}$) | $C_{ENT}$ | 5 | pF |
| Capacitive loading for data path ($T_{DP}$) | $C_{LOAD}$ | 10 | pF |

**AC Switching Characteristics**

Worst commercial-case conditions: $T_J$ = 85 °C, $V_{DD}$ = 1.14 V, and $V_{DDI}$ = 3.0V.

.

**TABLE 3-89: PCI/PCIX AC SWITCHING CHARACTERISTICS FOR RECEIVER FOR MSIO I/O BANK (INPUT BUFFERS)**

| On-Die Termination (ODT) | $T_{PY}$ | | $T_{PYS}$ | | Unit |
|---|---|---|---|---|---|
| | –1 | –Std | –1 | –Std | |
| None | 2.229 | 2.623 | 2.238 | 2.633 | ns |

**TABLE 3-90: PCI/PCIX AC SWITCHING CHARACTERISTICS FOR TRANSMITTER FOR MSIO I/O BANK (OUTPUT AND TRISTATE BUFFERS)**

| $T_{DP}$ | | $T_{ZL}$ | | $T_{ZH}$ | | $T_{HZ}$ | | $T_{LZ}$ | | Unit |
|---|---|---|---|---|---|---|---|---|---|---|
| –1 | –Std | –1 | –Std | –1 | –Std | –1 | –Std | –1 | –Std | |
| 2.146 | 2.525 | 2.043 | 2.404 | 2.084 | 2.452 | 6.095 | 7.171 | 5.558 | 6.539 | ns |

## 3.6 Memory Interface and Voltage Referenced I/O Standards

This section describes High-Speed Transceiver Logic (HSTL) memory interface and voltage reference I/O standards.

### 3.6.1 HIGH-SPEED TRANSCEIVER LOGIC (HSTL)

The HSTL standard is a general purpose high-speed bus standard sponsored by IBM (EIA/JESD8-6). IGLOO 2 FPGA and SmartFusion 2 SoC FPGA devices support two classes of the 1.5V HSTL. These differential versions of the standard require a differential amplifier input buffer and a push-pull output buffer.

**Minimum and Maximum DC/AC Input and Output Levels Specification (Applicable to DDRIO Bank Only)**

**TABLE 3-91: HSTL RECOMMENDED DC OPERATING CONDITIONS**

| Parameter | Symbol | Min. | Typ. | Max. | Unit |
|---|---|---|---|---|---|
| Supply voltage | $V_{DDI}$ | 1.425 | 1.5 | 1.575 | V |
| Termination voltage | $V_{TT}$ | 0.698 | 0.750 | 0.803 | V |
| Input reference voltage | $V_{REF}$ | 0.698 | 0.750 | 0.803 | V |

**TABLE 3-92: HSTL DC INPUT VOLTAGE SPECIFICATION**

| Parameter | Symbol | Min. | Max. | Unit |
|---|---|---|---|---|
| DC input logic high | $V_{IH}$ (DC) | $V_{REF}$ + 0.1 | 1.575 | V |
| DC input logic low | $V_{IL}$ (DC) | –0.3 | $V_{REF}$ – 0.1 | V |
| Input current high[1] | $I_{IH}$ (DC) | — | — | — |
| Input current low[1] | $I_{IL}$ (DC) | — | — | — |

1 See Table 3-22.


© 2026 Microchip Technology Inc. and its subsidiaries

**TABLE 3-93: HSTL DC OUTPUT VOLTAGE SPECIFICATION APPLICABLE TO DDRIO I/O BANK ONLY**

| Parameter | Symbol | Min. | Max. | Unit |
|---|---|---|---|---|
| **HSTL Class I** | | | | |
| DC output logic high | $V_{OH}$ | $V_{DDI}$ – 0.4 | — | V |
| DC output logic low | $V_{OL}$ | — | 0.4 | V |
| Output minimum source DC current (MSIO and DDRIO I/O banks) | $I_{OH}$ at $V_{OH}$ | –8.0 | — | mA |
| Output minimum sink current (MSIO and DDRIO I/O banks) | $I_{OL}$ at $V_{OL}$ | 8.0 | — | mA |
| **HSTL Class II** | | | | |
| DC output logic high | $V_{OH}$ | $V_{DDI}$ – 0.4 | — | V |
| DC output logic low | $V_{OL}$ | — | 0.4 | V |
| Output minimum source DC current | $I_{OH}$ at $V_{OH}$ | –16.0 | — | mA |
| Output minimum sink current | $I_{OL}$ at $V_{OL}$ | 16.0 | — | mA |

**TABLE 3-94: HSTL DC DIFFERENTIAL VOLTAGE SPECIFICATION**

| Parameter | Symbol | Min. | Unit |
|---|---|---|---|
| DC input differential voltage | $V_{ID}$ (DC) | 0.2 | V |

**TABLE 3-95: HSTL AC DIFFERENTIAL VOLTAGE SPECIFICATIONS**

| Parameter | Symbol | Min. | Max. | Unit |
|---|---|---|---|---|
| AC input differential voltage | $V_{DIFF}$ | 0.4 | — | V |
| AC differential cross point voltage | $V_x$ | 0.68 | 0.9 | V |

**TABLE 3-96: HSTL MINIMUM AND MAXIMUM AC SWITCHING SPEED**

| Parameter | Symbol | Max. | Unit | Conditions |
|---|---|---|---|---|
| Maximum data rate | $D_{MAX}$ | 400 | Mbps | AC loading: per JEDEC specifications |

**TABLE 3-97: HSTL IMPEDANCE SPECIFICATION**

| Parameter | Symbol | Typ. | Unit | Conditions |
|---|---|---|---|---|
| Supported output driver calibrated impedance (for DDRIO I/O bank) | $R_{REF}$ | 25.5, 47.8 | Ω | Reference resistance = 191Ω |
| Effective impedance value (ODT for DDRIO I/O bank only) | $R_{TT}$ | 47.8 | Ω | Reference resistance = 191Ω |

**TABLE 3-98: HSTL AC TEST PARAMETER SPECIFICATION**

| Parameter | Symbol | Typ. | Unit |
|---|---|---|---|
| Measuring/trip point for data path | $V_{TRIP}$ | 0.75 | V |
| Resistance for enable path ($T_{ZH}$, $T_{ZL}$, $T_{HZ}$, $T_{LZ}$) | $R_{ENT}$ | 2K | Ω |
| Capacitive loading for enable path ($T_{ZH}$, $T_{ZL}$, $T_{HZ}$, $T_{LZ}$) | $C_{ENT}$ | 5 | pF |
| Reference resistance for data test path for HSTL15 Class I ($T_{DP}$) | RTT_TEST | 50 | Ω |
| Reference resistance for data test path for HSTL15 Class II ($T_{DP}$) | RTT_TEST | 25 | Ω |
| Capacitive loading for data path ($T_{DP}$) | $C_{LOAD}$ | 5 | pF |

AC Switching Characteristics

Worst-case commercial conditions: $T_J$ = 85 °C, $V_{DD}$ = 1.14V, and worst-case $V_{DDI}$.

**TABLE 3-99: HSTL RECEIVER CHARACTERISTICS FOR DDRIO I/O BANK WITH FIXED CODE (INPUT BUFFERS)**

| | On-Die Termination (ODT) | $T_{PY}$ | | Unit |
|---|---|---|---|---|
| | | –1 | –Std | |
| Pseudo differential | None | 1.605 | 1.888 | ns |
| | 47.8 | 1.614 | 1.898 | ns |
| True differential | None | 1.622 | 1.909 | ns |
| | 47.8 | 1.628 | 1.916 | ns |

**TABLE 3-100: HSTL TRANSMITTER CHARACTERISTICS FOR DDRIO I/O BANK (OUTPUT AND TRISTATE BUFFERS)**

| | $T_{DP}$ | | $T_{ZL}$ | | $T_{ZH}$ | | $T_{HZ}$ | | $T_{LZ}$ | | Unit |
|---|---|---|---|---|---|---|---|---|---|---|---|
| | –1 | –Std | –1 | –Std | –1 | –Std | –1 | –Std | –1 | –Std | |
| **HSTL Class I** | | | | | | | | | | | |
| Single-ended | 2.6 | 3.059 | 2.514 | 2.958 | 2.514 | 2.958 | 2.431 | 2.86 | 2.431 | 2.86 | ns |
| Differential | 2.621 | 3.083 | 2.648 | 3.115 | 2.647 | 3.113 | 2.925 | 3.442 | 2.923 | 3.44 | ns |
| **HSTL Class II** | | | | | | | | | | | |
| Single-ended | 2.511 | 2.954 | 2.488 | 2.927 | 2.49 | 2.93 | 2.409 | 2.833 | 2.411 | 2.836 | ns |
| Differential | 2.528 | 2.974 | 2.552 | 3.003 | 2.551 | 3.001 | 2.897 | 3.409 | 2.896 | 3.408 | ns |

### 3.6.2 STUB-SERIES TERMINATED LOGIC

Stub-Series Terminated Logic (SSTL) for 2.5V (SSTL2), 1.8V (SSTL18), and 1.5V (SSTL15) is supported in IGLOO 2 and SmartFusion 2 SoC FPGAs. SSTL2 is defined by JEDEC standard JESD8-9B and SSTL18 is defined by JEDEC standard JESD8-15. IGLOO 2 SSTL I/O configurations are designed to meet double data rate standards DDR/2/3 for general purpose memory buses. Double data rate standards are designed to meet their JEDEC specifications as defined by JEDEC standard JESD79F for DDR, JEDEC standard JESD79-2F for DDR, JEDEC standard JESD79-3D for DDR3, and JEDEC standard JESD209A for LPDDR.

### 3.6.3 STUB-SERIES TERMINATED LOGIC 2.5V (SSTL2)

SSTL2 Class I and Class II are supported in IGLOO 2 and SmartFusion 2 SoC FPGAs and also comply with reduced and full drive of double data rate (DDR) standards. IGLOO 2 and SmartFusion 2 SoC FPGA I/Os supports both standards for single-ended signaling and differential signaling for SSTL2. This standard requires a differential amplifier input buffer and a push-pull output buffer.

**Minimum and Maximum DC/AC Input and Output Levels Specification**

**TABLE 3-101: DDR1/SSTL2 DC RECOMMENDED OPERATING CONDITIONS**

| Parameter | Symbol | Min. | Typ. | Max. | Unit |
|---|---|---|---|---|---|
| Supply voltage | $V_{DDI}$ | 2.375 | 2.5 | 2.625 | V |
| Termination voltage | $V_{TT}$ | 1.164 | 1.250 | 1.339 | V |
| Input reference voltage | $V_{REF}$ | 1.164 | 1.250 | 1.339 | V |

**TABLE 3-102: DDR1/SSTL2 DC INPUT VOLTAGE SPECIFICATION**

| Parameter | Symbol | Min. | Max. | Unit |
|---|---|---|---|---|
| DC input logic high | $V_{IH}$ (DC) | $V_{REF}$ + 0.15 | 2.625 | V |
| DC input logic low | $V_{IL}$ (DC) | –0.3 | VREF – 0.15 | V |
| Input current high[1] | $I_{IH}$ (DC) | — | — | — |


© 2026 Microchip Technology Inc. and its subsidiaries

**TABLE 3-102: DDR1/SSTL2 DC INPUT VOLTAGE SPECIFICATION (CONTINUED)**

| Parameter | Symbol | Min. | Max. | Unit |
|---|---|---|---|---|
| Input current low[1] | $I_{IL}$ (DC) | — | — | — |

1 See Table 3-22.

**TABLE 3-103: DDR1/SSTL2 DC OUTPUT VOLTAGE SPECIFICATION**

| Parameter | Symbol | Min. | Max. | Unit |
|---|---|---|---|---|
| **SSTL2 Class I (DDR Reduced Drive)** | | | | |
| DC output logic high | $V_{OH}$ | $V_{TT}$ + 0.608 | — | V |
| DC output logic low | $V_{OL}$ | | $V_{TT}$ – 0.608 | V |
| Output minimum source DC current | $I_{OH}$ at $V_{OH}$ | 8.1 | — | mA |
| Output minimum sink current | $I_{OL}$ at $V_{OL}$ | –8.1 | — | mA |
| **SSTL2 Class II (DDR Full Drive) – Applicable to MSIO and DDRIO I/O Bank Only** | | | | |
| DC output logic high | $V_{OH}$ | $V_{TT}$ + 0.81 | — | V |
| DC output logic low | $V_{OL}$ | — | $V_{TT}$ – 0.81 | V |
| Output minimum source DC current | $I_{OH}$ at $V_{OH}$ | 16.2 | — | mA |
| Output minimum sink current | $I_{OL}$ at $V_{OL}$ | –16.2 | — | mA |

**TABLE 3-104: DDR1/SSTL2 DC DIFFERENTIAL VOLTAGE SPECIFICATION**

| Parameter | Symbol | Min | Unit |
|---|---|---|---|
| DC input differential voltage | $V_{ID}$ (DC) | 0.3 | V |

**TABLE 3-105: SSTL2 AC DIFFERENTIAL VOLTAGE SPECIFICATIONS**

| Parameter | Symbol | Min. | Max. | Unit |
|---|---|---|---|---|
| AC input differential voltage | $V_{DIFF}$ (AC) | 0.7 | — | V |
| AC differential cross point voltage | $V_x$ (AC) | 0.5 × $V_{DDI}$ – 0.2 | 0.5 × $V_{DDI}$ + 0.2 | V |

**TABLE 3-106: SSTL2 MINIMUM AND MAXIMUM AC SWITCHING SPEEDS**

| Parameter | Symbol | Max. | Unit | Conditions |
|---|---|---|---|---|
| Maximum data rate (for DDRIO I/O bank) | $D_{MAX}$ | 400 | Mbps | AC loading: per JEDEC specifications |
| Maximum data rate (for MSIO I/O bank) | $D_{MAX}$ | 575 | Mbps | AC loading: 17 pF load |
| Maximum data rate (for MSIOD I/O bank) | $D_{MAX}$ | 700 | Mbps | AC loading: 3 pF/50 Ω load |
| | | 510 | Mbps | AC loading: 17pF load |

**TABLE 3-107: SSTL2 AC IMPEDANCE SPECIFICATIONS**

| Parameter | Typ. | Unit | Conditions |
|---|---|---|---|
| Supported output driver calibrated impedance (for DDRIO I/O bank) | 20, 42 | Ω | Reference resistor = 150Ω |

**TABLE 3-108: DDR1/SSTL2 AC TEST PARAMETER SPECIFICATIONS**

| Parameter | Symbol | Typ | Unit |
|---|---|---|---|
| Measuring/trip point for data path | $V_{TRIP}$ | 1.25 | V |

**TABLE 3-108: DDR1/SSTL2 AC TEST PARAMETER SPECIFICATIONS (CONTINUED)**

| Parameter | Symbol | Typ | Unit |
|---|---|---|---|
| Resistance for enable path ($T_{ZH}$, $T_{ZL}$, $T_{HZ}$, $T_{LZ}$) | $R_{ENT}$ | 2K | Ω |
| Capacitive loading for enable path ($T_{ZH}$, $T_{ZL}$, $T_{HZ}$, $T_{LZ}$) | $C_{ENT}$ | 5 | pF |
| Reference resistance for data test path for SSTL2 Class I ($T_{DP}$) | RTT_TEST | 50 | Ω |
| Reference resistance for data test path for SSTL2 Class II ($T_{DP}$) | RTT_TEST | 25 | Ω |
| Capacitive loading for data path ($T_{DP}$) | $C_{LOAD}$ | 5 | pF |

**AC Switching Characteristics**

Worst commercial-case conditions: $T_J$ = 85 °C, $V_{DD}$ = 1.14V, and $V_{DDI}$ = 2.375V.

**TABLE 3-109: SSTL2 RECEIVER CHARACTERISTICS FOR DDRIO I/O BANK (INPUT BUFFERS)**

| | On-Die Termination (ODT) | $T_{PY}$ | | Unit |
|---|---|---|---|---|
| | | –1 | –Std | |
| Pseudo differential | None | 1.549 | 1.821 | ns |
| True differential | None | 1.589 | 1.87 | ns |

**TABLE 3-110: SSTL2 RECEIVER CHARACTERISTICS FOR MSIO I/O BANK (INPUT BUFFERS)**

| | On-Die Termination (ODT) | $T_{PY}$ | | Unit |
|---|---|---|---|---|
| | | –1 | –Std | |
| Pseudo differential | None | 2.798 | 3.293 | ns |
| True differential | None | 2.733 | 3.215 | ns |

**TABLE 3-111: DDR1/SSTL2 RECEIVER CHARACTERISTICS FOR MSIOD I/O BANK (INPUT BUFFERS)**

| | On-Die Termination (ODT) | $T_{PY}$ | | Unit |
|---|---|---|---|---|
| | | –1 | –Std | |
| Pseudo differential | None | 2.476 | 2.913 | ns |
| True differential | None | 2.475 | 2.911 | ns |

**TABLE 3-112: SSTL2 CLASS I TRANSMITTER CHARACTERISTICS FOR DDRIO I/O BANK (OUTPUT AND TRISTATE BUFFERS)**

| | $T_{DP}$ | | $T_{ZL}$ | | $T_{ZH}$ | | $T_{HZ}$ | | $T_{LZ}$ | | Unit |
|---|---|---|---|---|---|---|---|---|---|---|---|
| | –1 | –Std | –1 | –Std | –1 | –Std | –1 | –Std | –1 | –Std | |
| Single-ended | 2.26 | 2.66 | 1.99 | 2.341 | 1.985 | 2.335 | 2.135 | 2.512 | 2.13 | 2.505 | ns |
| Differential | 2.26 | 2.658 | 2.202 | 2.591 | 2.201 | 2.589 | 2.393 | 2.815 | 2.392 | 2.814 | ns |

**TABLE 3-113: DDR1/SSTL2 CLASS I TRANSMITTER CHARACTERISTICS FOR MSIO I/O BANK (OUTPUT AND TRISTATE BUFFERS)**

| | $T_{DP}$ | | $T_{ZL}$ | | $T_{ZH}$ | | $T_{HZ}$ | | $T_{LZ}$ | | Unit |
|---|---|---|---|---|---|---|---|---|---|---|---|
| | –1 | –Std | –1 | –Std | –1 | –Std | –1 | –Std | –1 | –Std | |
| Single-ended | 2.055 | 2.417 | 2.037 | 2.396 | 2.03 | 2.388 | 2.068 | 2.433 | 2.061 | 2.425 | ns |
| Differential | 2.192 | 2.58 | 2.434 | 2.864 | 2.425 | 2.852 | 2.164 | 2.545 | 2.156 | 2.536 | ns |


© 2026 Microchip Technology Inc. and its subsidiaries

**TABLE 3-114: DDR1/SSTL2 CLASS I TRANSMITTER CHARACTERISTICS FOR MSIOD I/O BANK (OUTPUT AND TRISTATE BUFFERS)**

| | $T_{DP}$ | | $T_{ZL}$ | | $T_{ZH}$ | | $T_{HZ}$ | | $T_{LZ}$ | | Unit |
|---|---|---|---|---|---|---|---|---|---|---|---|
| | –1 | –Std | –1 | –Std | –1 | –Std | –1 | –Std | –1 | –Std | |
| Single-ended | 1.512 | 1.779 | 1.462 | 1.72 | 1.462 | 1.72 | 1.676 | 1.972 | 1.676 | 1.971 | ns |
| Differential | 1.676 | 1.971 | 1.774 | 2.087 | 1.766 | 2.077 | 1.854 | 2.181 | 1.845 | 2.171 | ns |

**TABLE 3-115: DDR1/SSTL2 CLASS II TRANSMITTER CHARACTERISTICS FOR DDRIO I/O BANK (OUTPUT AND TRISTATE BUFFERS)**

| | $T_{DP}$ | | $T_{ZL}$ | | $T_{ZH}$ | | $T_{HZ}$ | | $T_{LZ}$ | | Unit |
|---|---|---|---|---|---|---|---|---|---|---|---|
| | –1 | –Std | –1 | –Std | –1 | –Std | –1 | –Std | –1 | –Std | |
| Single-ended | 2.122 | 2.497 | 1.906 | 2.243 | 1.902 | 2.237 | 2.061 | 2.424 | 2.056 | 2.418 | ns |
| Differential | 2.127 | 2.501 | 2.042 | 2.402 | 2.043 | 2.403 | 2.363 | 2.78 | 2.365 | 2.781 | ns |

**TABLE 3-116: DDR1/SSTL2 CLASS II TRANSMITTER CHARACTERISTICS FOR MSIO I/O BANK (OUTPUT AND TRISTATE BUFFERS)**

| | $T_{DP}$ | | $T_{ZL}$ | | $T_{ZH}$ | | $T_{HZ}$ | | $T_{LZ}$ | | Unit |
|---|---|---|---|---|---|---|---|---|---|---|---|
| | –1 | –Std | –1 | –Std | –1 | –Std | –1 | –Std | –1 | –Std | |
| Single-ended | 2.29 | 2.693 | 1.988 | 2.338 | 1.978 | 2.326 | 1.989 | 2.34 | 1.979 | 2.328 | ns |
| Differential | 2.418 | 2.846 | 2.304 | 2.711 | 2.297 | 2.702 | 2.131 | 2.506 | 2.124 | 2.499 | ns |

### 3.6.4 STUB-SERIES TERMINATED LOGIC 1.8V (SSTL18)

SSTL18 Class I and Class II are supported in IGLOO 2 and SmartFusion 2 SoC FPGAs, and comply with the reduced and full drive double date rate (DDR2) standard. IGLOO 2 and SmartFusion 2 SoC FPGA I/Os support both standards for single-ended signaling and differential signaling for SSTL18. This standard requires a differential amplifier input buffer and a push-pull output buffer.

**Minimum and Maximum DC/AC Input and Output Levels Specification**

**TABLE 3-117: SSTL18 DC RECOMMENDED DC OPERATING CONDITIONS**

| Parameter | Symbol | Min. | Typ. | Max. | Unit |
|---|---|---|---|---|---|
| Supply voltage | $V_{DDI}$ | 1.71 | 1.8 | 1.89 | V |
| Termination voltage | $V_{TT}$ | 0.838 | 0.900 | 0.964 | V |
| Input reference voltage | $V_{REF}$ | 0.838 | 0.900 | 0.964 | V |

**TABLE 3-118: SSTL18 DC INPUT VOLTAGE SPECIFICATION**

| Parameter | Symbol | Min. | Max. | Unit |
|---|---|---|---|---|
| DC input logic high | $V_{IH}$ (DC) | $V_{REF}$ + 0.125 | 1.89 | V |
| DC input logic low | $V_{IL}$ (DC) | –0.3 | $V_{REF}$ – 0.125 | V |
| Input current high[1] | $I_{IH}$ (DC) | — | — | — |
| Input current low[1] | $I_{IL}$ (DC) | — | — | — |

1 See Table 3-22.

**TABLE 3-119: SSTL18 DC OUTPUT VOLTAGE SPECIFICATION**

| Parameter | Symbol | Min. | Max. | Unit |
|---|---|---|---|---|
| **SSTL18 Class I (DDR2 Reduced Drive)** | | | | |
| DC output logic high | $V_{OH}$ | $V_{TT}$ + 0.603 | — | V |
| DC output logic low | $V_{OL}$ | | $V_{TT}$– 0.603 | V |

**TABLE 3-119: SSTL18 DC OUTPUT VOLTAGE SPECIFICATION (CONTINUED)**

| Parameter | Symbol | Min. | Max. | Unit |
|---|---|---|---|---|
| Output minimum source DC current (DDRIO I/O bank only) | $I_{OH}$ at $V_{OH}$ | 6.5 | — | mA |
| Output minimum sink current (DDRIO I/O bank only) | $I_{OL}$ at $V_{OL}$ | –6.5 | — | mA |
| **SSTL18 Class II (DDR2 Full Drive)[1]** | | | | |
| DC output logic high | $V_{OH}$ | $V_{TT}$ + 0.603 | — | V |
| DC output logic low | $V_{OL}$ | | $V_{TT}$– 0.603 | V |
| Output minimum source DC current (DDRIO I/O bank only) | $I_{OH}$ at $V_{OH}$ | 13.4 | — | mA |
| Output minimum sink current (DDRIO I/O bank only) | $I_{OL}$ at $V_{OL}$ | –13.4 | — | mA |

1 To meet JEDEC Electrical Compliance, use DDR2 Full Drive Transmitter.

**TABLE 3-120: SSTL18 DC DIFFERENTIAL VOLTAGE SPECIFICATION**

| Parameter | Symbol | Min. | Unit |
|---|---|---|---|
| DC input differential voltage | $V_{ID}$ (DC) | 0.3 | V |

**TABLE 3-121: SSTL18 AC DIFFERENTIAL VOLTAGE SPECIFICATIONS (APPLICABLE TO DDRIO BANK ONLY)**

| Parameter | Symbol | Min. | Max. | Unit |
|---|---|---|---|---|
| AC input differential voltage | $V_{DIFF}$ (AC) | 0.5 | — | V |
| AC differential cross point voltage | $V_x$ (AC) | 0.5 × $V_{DDI}$ – 0.175 | 0.5 × $V_{DDI}$ + 0.175 | V |

**TABLE 3-122: SSTL18 MINIMUM AND MAXIMUM AC SWITCHING SPEED (APPLICABLE TO DDRIO BANK ONLY)**

| Parameter | Symbol | Max. | Unit | Conditions |
|---|---|---|---|---|
| Maximum data rate (for DDRIO I/O bank) | $D_{MAX}$ | 667 | Mbps | AC loading: per JEDEC specification |

**TABLE 3-123: SSTL18 AC IMPEDANCE SPECIFICATIONS (APPLICABLE TO DDRIO BANK ONLY)**

| Parameter | Symbol | Typ. | Unit | Conditions |
|---|---|---|---|---|
| Supported output driver calibrated impedance (for DDRIO I/O bank) | $R_{REF}$ | 20, 42 | Ω | Reference resistor = 150Ω |
| Effective impedance value (ODT) | $R_{TT}$ | 50, 75, 150 | Ω | Reference resistor = 150Ω |

**TABLE 3-124: SSTL18 AC TEST PARAMETER SPECIFICATIONS (APPLICABLE TO DDRIO BANK ONLY)**

| Parameter | Symbol | Typ. | Unit |
|---|---|---|---|
| Measuring/trip point for data path | $V_{TRIP}$ | 0.9 | V |
| Resistance for enable path ($T_{ZH}$, $T_{ZL}$, $T_{HZ}$, $T_{LZ}$) | $R_{ENT}$ | 2K | Ω |
| Capacitive loading for enable path ($T_{ZH}$, $T_{ZL}$, $T_{HZ}$, $T_{LZ}$) | $C_{ENT}$ | 5 | pF |
| Reference resistance for data test path for SSTL18 Class I ($T_{DP}$) | RTT_TEST | 50 | Ω |
| Reference resistance for data test path for SSTL18 Class II ($T_{DP}$) | RTT_TEST | 25 | Ω |
| Capacitive loading for data path ($T_{DP}$) | $C_{LOAD}$ | 5 | pF |

**AC Switching Characteristics**


© 2026 Microchip Technology Inc. and its subsidiaries

Worst commercial-case conditions: $T_J$ = 85 °C, $V_{DD}$ = 1.14V, and $V_{DDI}$ = 1.71V.

**TABLE 3-125: DDR2/SSTL18 RECEIVER CHARACTERISTICS FOR DDRIO I/O BANK WITH FIXED CODE**

| | On-Die Termination (ODT) | $T_{PY}$ | | Unit |
|---|---|---|---|---|
| | | –1 | –Std | |
| Pseudo differential | None | 1.567 | 1.844 | ns |
| True differential | None | 1.588 | 1.869 | ns |

**TABLE 3-126: DDR2/SSTL18 TRANSMITTER CHARACTERISTICS (OUTPUT AND TRISTATE BUFFERS)**

| | $T_{DP}$ | | $T_{ZL}$ | | $T_{ZH}$ | | $T_{HZ}$ | | $T_{LZ}$ | | Unit |
|---|---|---|---|---|---|---|---|---|---|---|---|
| | –1 | –Std | –1 | –Std | –1 | –Std | –1 | –Std | –1 | –Std | |
| **SSTL18 Class I (for DDRIO I/O Bank)** | | | | | | | | | | | |
| Single-ended | 2.383 | 2.804 | 2.23 | 2.623 | 2.229 | 2.622 | 2.202 | 2.591 | 2.201 | 2.59 | ns |
| Differential | 2.413 | 2.84 | 2.797 | 3.29 | 2.797 | 3.29 | 2.282 | 2.685 | 2.282 | 2.685 | ns |
| **SSTL18 Class II (for DDRIO I/O Bank)** | | | | | | | | | | | |
| Single-ended | 2.281 | 2.683 | 2.196 | 2.584 | 2.195 | 2.583 | 2.171 | 2.555 | 2.17 | 2.554 | ns |
| Differential | 2.315 | 2.724 | 2.698 | 3.173 | 2.698 | 3.173 | 2.242 | 2.639 | 2.242 | 2.639 | ns |

### 3.6.5 STUB-SERIES TERMINATED LOGIC 1.5V (SSTL15)

SSTL15 Class I and Class II are supported in IGLOO 2 FPGAs and SmartFusion 2 SoC FPGAs, and also comply with the reduced and full drive double data rate (DDR3) standard. IGLOO 2 FPGA and SmartFusion 2 SoC FPGA I/Os supports both standards for single-ended signaling and differential signaling for SSTL18. This standard requires a differential amplifier input buffer and a push-pull output buffer.

**Minimum and Maximum DC/AC Input and Output Levels Specification**

The following table lists the SSTL15 DC voltage specifications for DDRIO bank.

**TABLE 3-127: SSTL15 DC RECOMMENDED DC OPERATING CONDITIONS (FOR DDRIO I/O BANK ONLY)**

| Parameter | Symbol | Min. | Typ. | Max. | Unit |
|---|---|---|---|---|---|
| Supply voltage | $V_{DDI}$ | 1.425 | 1.5 | 1.575 | V |
| Termination voltage | $V_{TT}$ | 0.698 | 0.750 | 0.803 | V |
| Input reference voltage | $V_{REF}$ | 0.698 | 0.750 | 0.803 | V |

**TABLE 3-128: SSTL15 DC INPUT VOLTAGE SPECIFICATION (FOR DDRIO I/O BANK ONLY)**

| Parameter | Symbol | Min. | Max. | Unit |
|---|---|---|---|---|
| DC input logic high | $V_{IH}$(DC) | $V_{REF}$ + 0.1 | 1.575 | V |
| DC input logic low | $V_{IL}$(DC) | –0.3 | $V_{REF}$ – 0.1 | V |
| Input current high[1] | $I_{IH}$ (DC) | — | — | — |
| Input current low[1] | $I_{IL}$ (DC) | — | — | — |

1 See Table 3-22.

**TABLE 3-129: SSTL15 DC OUTPUT VOLTAGE SPECIFICATION (FOR DDRIO I/O BANK ONLY)**

| Parameter | Symbol | Min. | Max. | Unit |
|---|---|---|---|---|
| **DDR3/SSTL15 Class I (DDR3 Reduced Drive)** | | | | |

**TABLE 3-129: SSTL15 DC OUTPUT VOLTAGE SPECIFICATION (FOR DDRIO I/O BANK ONLY)**

| Parameter | Symbol | Min. | Max. | Unit |
|---|---|---|---|---|
| DC output logic high | $V_{OH}$ | 0.8 × $V_{DDI}$ | — | V |
| DC output logic low | $V_{OL}$ | | 0.2 × $V_{DDI}$ | V |
| Output minimum source DC current | $I_{OH}$ at $V_{OH}$ | 6.5 | — | mA |
| Output minimum sink current | $I_{OL}$ at $V_{OL}$ | –6.5 | — | mA |
| **DDR3/SSTL15 Class II (DDR3 Full Drive)** | | | | |
| DC output logic high | $V_{OH}$ | 0.8 × $V_{DDI}$ | — | V |
| DC output logic low | $V_{OL}$ | | 0.2 × $V_{DDI}$ | V |
| Output minimum source DC current | $I_{OH}$ at $V_{OH}$ | 7.6 | — | mA |
| Output minimum sink current | $I_{OL}$ at $V_{OL}$ | –7.6 | — | mA |

**TABLE 3-130: SSTL15 DC DIFFERENTIAL VOLTAGE SPECIFICATION (FOR DDRIO I/O BANK ONLY)**

| Parameter | Symbol | Min. | Unit |
|---|---|---|---|
| DC input differential voltage | $V_{ID}$ | 0.2 | V |

**Note:** To meet JEDEC electrical compliance, use DDR3 full drive transmitter.

**TABLE 3-131: SSTL15 AC SSTL15 MINIMUM AND MAXIMUM AC SWITCHING SPEED (FOR DDRIO I/O BANK ONLY)**

| Parameter | Symbol | Min. | Max. | Unit |
|---|---|---|---|---|
| AC input differential voltage | $V_{DIFF}$ (AC) | 0.3 | — | V |
| AC differential cross point voltage | $V_x$ (AC) | 0.5 × $V_{DDI}$ – 0.150 | 0.5 × $V_{DDI}$ + 0.150 | V |

**TABLE 3-132: SSTL15 MINIMUM AND MAXIMUM AC SWITCHING SPEED (FOR DDRIO I/O BANK ONLY)**

| Parameter | Symbol | Max. | Unit | Conditions |
|---|---|---|---|---|
| Maximum data rate | $D_{MAX}$ | 667 | Mbps | AC loading: per JEDEC specifications |

**TABLE 3-133: SSTL15 AC CALIBRATED IMPEDANCE OPTION (FOR DDRIO I/O BANK ONLY)**

| Parameter | Symbol | Typ. | Unit | Conditions |
|---|---|---|---|---|
| Supported output driver calibrated impedance | $R_{REF}$ | 34, 40 | Ω | Reference resistor = 240Ω |
| Effective impedance value (ODT) | $R_{TT}$ | 20, 30, 40, 60, 120 | Ω | Reference resistor = 240Ω |

**TABLE 3-134: SSTL15 AC TEST PARAMETER SPECIFICATIONS (FOR DDRIO I/O BANK ONLY)**

| Parameter | Symbol | Typ. | Unit |
|---|---|---|---|
| Measuring/trip point for data path | $V_{TRIP}$ | 0.75 | V |
| Resistance for enable path ($T_{ZH}$, $T_{ZL}$, $T_{HZ}$, $T_{LZ}$) | $R_{ENT}$ | 2K | Ω |
| Capacitive loading for enable path ($T_{ZH}$, $T_{ZL}$, $T_{HZ}$, $T_{LZ}$) | $C_{ENT}$ | 5 | pF |
| Reference resistance for data test path for SSTL15 Class I ($T_{DP}$) | RTT_TEST | 50 | Ω |
| Reference resistance for data test path for SSTL15 Class II ($T_{DP}$) | RTT_TEST | 25 | Ω |
| Capacitive loading for data path ($T_{DP}$) | $C_{LOAD}$ | 5 | pF |


© 2026 Microchip Technology Inc. and its subsidiaries

**AC Switching Characteristics**

Worst commercial-case conditions: TJ = 85 °C, $V_{DD}$ = 1.14V, and $V_{DDI}$ = 1.425V.

**TABLE 3-135: DDR3/SSTL15 RECEIVER CHARACTERISTICS FOR DDRIO I/O BANK—WITH CALIBRATION ONLY**

| On-Die Termination (ODT) | | $T_{PY}$ | | Unit |
|---|---|---|---|---|
| | | –1 | –Std | |
| Pseudo differential | None | 1.605 | 1.888 | ns |
| | 20 | 1.616 | 1.901 | ns |
| | 30 | 1.613 | 1.897 | ns |
| | 40 | 1.611 | 1.895 | ns |
| | 60 | 1.609 | 1.893 | ns |
| | 120 | 1.607 | 1.89 | ns |
| True differential | None | 1.623 | 1.91 | ns |
| | 20 | 1.637 | 1.926 | ns |
| | 30 | 1.63 | 1.918 | ns |
| | 40 | 1.626 | 1.914 | ns |
| | 60 | 1.622 | 1.91 | ns |
| | 120 | 1.619 | 1.905 | ns |

**TABLE 3-136: DDR3/SSTL15 TRANSMITTER CHARACTERISTICS (OUTPUT AND TRISTATE BUFFERS)**

| | $T_{DP}$ | | $T_{ZL}$ | | $T_{ZH}$ | | $T_{HZ}$ | | $T_{LZ}$ | | Unit |
|---|---|---|---|---|---|---|---|---|---|---|---|
| | –1 | –Std | –1 | –Std | –1 | –Std | –1 | –Std | –1 | –Std | |
| **DDR3 Reduced Drive/SSTL15 Class I (for DDRIO I/O Bank)** | | | | | | | | | | | |
| Single-ended | 2.533 | 2.98 | 2.522 | 2.967 | 2.523 | 2.968 | 2.427 | 2.855 | 2.428 | 2.856 | ns |
| Differential | 2.555 | 3.005 | 3.073 | 3.615 | 3.073 | 3.615 | 2.416 | 2.843 | 2.416 | 2.843 | ns |
| **DDR3 Full Drive/SSTL15 Class II (for DDRIO I/O Bank)** | | | | | | | | | | | |
| Single-ended | 2.53 | 2.977 | 2.514 | 2.958 | 2.516 | 2.96 | 2.422 | 2.849 | 2.425 | 2.852 | ns |
| Differential | 2.552 | 3.002 | 2.591 | 3.048 | 2.59 | 3.047 | 2.882 | 3.391 | 2.881 | 3.39 | ns |

### 3.6.6 LOW POWER DOUBLE DATA RATE (LPDDR)

LPDDR reduced and full drive low power double data rate standards are supported in IGLOO 2 FPGA and SmartFusion 2 SoC FPGA I/Os. This standard requires a differential amplifier input buffer and a push-pull output buffer.

**Minimum and Maximum DC/AC Input and Output Levels Specification**

**TABLE 3-137: LPDDR DC RECOMMENDED DC OPERATING CONDITIONS**

| Parameter | Symbol | Min. | Typ. | Max. |
|---|---|---|---|---|
| Supply voltage | $V_{DDI}$ | 1.71 | 1.8 | 1.89 |
| Termination voltage | $V_{TT}$ | 0.838 | 0.900 | 0.964 |
| Input reference voltage | $V_{REF}$ | 0.838 | 0.900 | 0.964 |

**TABLE 3-138: LPDDR DC INPUT VOLTAGE SPECIFICATION**

| Parameter | Symbol | Min. | Max. |
|---|---|---|---|
| DC input logic high | $V_{IH}$ (DC) | 0.7 × $V_{DDI}$ | 1.89 |

**TABLE 3-138: LPDDR DC INPUT VOLTAGE SPECIFICATION (CONTINUED)**

| Parameter | Symbol | Min. | Max. |
|---|---|---|---|
| DC input logic low | $V_{IL}$ (DC) | –0.3 | 0.3 × $V_{DDI}$ |
| Input current high[1] | $I_{IH}$ (DC) | — | — |
| Input current low[1] | $I_{IL}$ (DC) | — | — |

1 See Table 3-22.

**TABLE 3-139: LPDDR DC OUTPUT VOLTAGE SPECIFICATION REDUCED DRIVE**

| Parameter | Symbol | Min. | Max. |
|---|---|---|---|
| DC output logic high | $V_{OH}$ | 0.9 × $V_{DDI}$ | — |
| DC output logic low | $V_{OL}$ | — | 0.1 × $V_{DDI}$ |
| Output minimum source DC current | $I_{OH}$ at $V_{OH}$ | 0.1 | — |
| Output minimum sink current | $I_{OL}$ at $V_{OL}$ | –0.1 | — |

**TABLE 3-140: LPDDR DC OUTPUT VOLTAGE SPECIFICATION FULL DRIVE[1]**

| Parameter | Symbol | Min. | Max. |
|---|---|---|---|
| DC output logic high | $V_{OH}$ | 0.9 × $V_{DDI}$ | — |
| DC output logic low | $V_{OL}$ | — | 0.1 × $V_{DDI}$ |
| Output minimum source DC current | $I_{OH}$ at $V_{OH}$ | 0.1 | — |
| Output minimum sink current | $I_{OL}$ at $V_{OL}$ | –0.1 | — |

1 To meet JEDEC Electrical Compliance, use LPDDR Full Drive Transmitter.

**TABLE 3-141: LPDDR DC DIFFERENTIAL VOLTAGE SPECIFICATION**

| Parameter | Symbol | Min. |
|---|---|---|
| DC input differential voltage | $V_{ID}$ (DC) | 0.4 × $V_{DDI}$ |

**TABLE 3-142: LPDDR AC DIFFERENTIAL VOLTAGE SPECIFICATIONS (FOR DDRIO I/O BANK ONLY)**

| Parameter | Symbol | Min. | Max. | Unit |
|---|---|---|---|---|
| AC input differential voltage | $V_{DIFF}$ | 0.6 × $V_{DDI}$ | — | V |
| AC differential cross point voltage | $V_x$ | 0.4 × $V_{DDI}$ | 0.6 × $V_{DDI}$ | V |

**TABLE 3-143: LPDDR AC SPECIFICATIONS (FOR DDRIO I/O BANK ONLY)**

| Parameter | Symbol | Max. | Unit | Conditions |
|---|---|---|---|---|
| Maximum data rate | $D_{MAX}$ | 400 | Mbps | AC loading: per JEDEC specifications |

**TABLE 3-144: LPDDR AC CALIBRATED IMPEDANCE OPTION (FOR DDRIO I/O BANK ONLY)**

| Parameter | Symbol | Typ. | Unit | Conditions |
|---|---|---|---|---|
| Supported output driver calibrated impedance | $R_{REF}$ | 20, 42 | Ω | Reference resistor = 150Ω |
| Effective impedance value (ODT) | $R_{TT}$ | 50, 70, 150 | Ω | Reference resistor = 150Ω |

**TABLE 3-145: LPDDR AC TEST PARAMETER SPECIFICATIONS (FOR DDRIO I/O BANK ONLY)**

| Parameter | Symbol | Typ. | Unit |
|---|---|---|---|
| Measuring/trip point for data path | $V_{TRIP}$ | 0.9 | V |


© 2026 Microchip Technology Inc. and its subsidiaries

### TABLE 3-145: LPDDR AC TEST PARAMETER SPECIFICATIONS (FOR DDRIO I/O BANK ONLY)

| | | | |
|---|---|---|---|
| Resistance for enable path ($T_{ZH}$, $T_{ZL}$, $T_{HZ}$, $T_{LZ}$) | $R_{ENT}$ | 2K | Ω |
| Capacitive loading for enable path ($T_{ZH}$, $T_{ZL}$, $T_{HZ}$, $T_{LZ}$) | $C_{ENT}$ | 5 | pF |
| Reference resistance for data test path for LPDDR ($T_{DP}$) | RTT_TEST | 50 | Ω |
| Capacitive loading for data path ($T_{DP}$) | $C_{LOAD}$ | 5 | Ω |

**AC Switching Characteristics**

Worst-case commercial conditions: $T_J$ = 85 °C, $V_{DD}$ = 1.14 V, and worst-case $V_{DDI}$.

### TABLE 3-146: LPDDR RECEIVER CHARACTERISTICS FOR DDRIO I/O BANK WITH FIXED CODES

| | On-Die Termination (ODT) | $T_{PY}$ | | Unit |
|---|---|---|---|---|
| | | –1 | –Std | |
| Pseudo differential | None | 1.568 | 1.845 | ns |
| True differential | None | 1.588 | 1.869 | ns |

### TABLE 3-147: LPDDR REDUCED DRIVE FOR DDRIO I/O BANK (OUTPUT AND TRISTATE BUFFERS)

| | $T_{DP}$ | | $T_{ENZL}$ | | $T_{ENZH}$ | | $T_{ENHZ}$ | | $T_{ENLZ}$ | | Unit |
|---|---|---|---|---|---|---|---|---|---|---|---|
| | –1 | –Std | –1 | –Std | –1 | –Std | –1 | –Std | –1 | –Std | |
| Single-ended | 2.383 | 2.804 | 2.23 | 2.623 | 2.229 | 2.622 | 2.202 | 2.591 | 2.201 | 2.59 | ns |
| Differential | 2.396 | 2.819 | 2.764 | 3.252 | 2.764 | 3.252 | 2.255 | 2.653 | 2.255 | 2.653 | ns |

### TABLE 3-148: LPDDR FULL DRIVE FOR DDRIO I/O BANK (OUTPUT AND TRISTATE BUFFERS)

| | $T_{DP}$ | | $T_{ENZL}$ | | $T_{ENZH}$ | | $T_{ENHZ}$ | | $T_{ENLZ}$ | | Unit |
|---|---|---|---|---|---|---|---|---|---|---|---|
| | –1 | –Std | –1 | –Std | –1 | –Std | –1 | –Std | –1 | –Std | |
| Single-ended | 2.281 | 2.683 | 2.196 | 2.584 | 2.195 | 2.583 | 2.171 | 2.555 | 2.17 | 2.554 | ns |
| Differential | 2.298 | 2.703 | 2.288 | 2.692 | 2.288 | 2.692 | 2.593 | 3.051 | 2.593 | 3.051 | ns |

**Minimum and Maximum DC/AC Input and Output Levels Specification using LPDDR-LVCMOS 1.8V Mode**

### TABLE 3-149: LPDDR-LVCMOS 1.8V MODE RECOMMENDED DC OPERATING CONDITIONS

| Parameter | Symbol | Min. | Typ. | Max. | Unit |
|---|---|---|---|---|---|
| Supply voltage | $V_{DDI}$ | 1.710 | 1.8 | 1.89 | V |

### TABLE 3-150: LPDDR-LVCMOS 1.8V MODE DC INPUT VOLTAGE SPECIFICATION

| Parameter | Symbol | Min. | Max. | Unit |
|---|---|---|---|---|
| DC input logic high (for MSIOD and DDRIO I/O banks) | $V_{IH}$ (DC) | 0.65 × $V_{DDI}$ | 1.89 | V |
| DC input logic high (for MSIO I/O bank) | $V_{IH}$ (DC) | 0.65 × $V_{DDI}$ | 3.45 | V |
| DC input logic low | $V_{IL}$ (DC) | –0.3 | 0.35 × $V_{DDI}$ | V |
| Input current high[1] | $I_{IH}$ (DC) | — | — | — |
| Input current low[1] | $I_{IL}$ (DC) | — | — | — |

1 See Table 3-22.

### TABLE 3-151: LPDDR-LVCMOS 1.8V MODE DC OUTPUT VOLTAGE SPECIFICATION

| Parameter | Symbol | Min. | Max. | Unit |
|---|---|---|---|---|

**TABLE 3-151: LPDDR-LVCMOS 1.8V MODE DC OUTPUT VOLTAGE SPECIFICATION**

| | | | | |
|---|---|---|---|---|
| DC output logic high | $V_{OH}$ | $V_{DDI}$ – 0.45 | — | V |
| DC output logic low | $V_{OL}$ | — | 0.45 | V |

**TABLE 3-152: LPDDR-LVCMOS 1.8V MINIMUM AND MAXIMUM AC SWITCHING SPEEDS**

| Parameter | Symbol | Max. | Unit | Conditions |
|---|---|---|---|---|
| Maximum data rate (for DDRIO I/O bank) | $D_{MAX}$ | 400 | Mbps | AC loading: 17pf load, 8 ma drive and above/all slew |

**TABLE 3-153: LPDDR-LVCMOS 1.8V CALIBRATED IMPEDANCE OPTION**

| Parameter | Symbol | Typ. | Unit |
|---|---|---|---|
| Supported output driver calibrated impedance (for DDRIO I/O bank) | RODT_CAL | 75, 60, 50, 33, 25, 20 | Ω |

**TABLE 3-154: LPDDR-LVCMOS 1.8V AC TEST PARAMETER SPECIFICATIONS**

| Parameter | Symbol | Typ. | Unit |
|---|---|---|---|
| Measuring/trip point for data path | $V_{TRIP}$ | 0.9 | V |
| Resistance for enable path ($T_{ZH}$, $T_{ZL}$, $T_{HZ}$, $T_{LZ}$) | $R_{ENT}$ | 2K | Ω |
| Capacitive loading for enable path ($T_{ZH}$, $T_{ZL}$, $T_{HZ}$, $T_{LZ}$) | $C_{ENT}$ | 5 | pF |
| Capacitive loading for data path ($T_{DP}$) | $C_{LOAD}$ | 5 | pF |

**TABLE 3-155: LPDDR-LVCMOS 1.8V MODE TRANSMITTER DRIVE STRENGTH SPECIFICATION FOR DDRIO BANK**

| Output Drive Selection | $V_{OH}$ (V) Min. | $V_{OL}$ (V) Max. | $I_{OH}$ (at $V_{OH}$) mA | $I_{OL}$ (at $V_{OL}$) mA |
|---|---|---|---|---|
| 2 mA | $V_{DDI}$ – 0.45 | 0.45 | 2 | 2 |
| 4 mA | $V_{DDI}$ – 0.45 | 0.45 | 4 | 4 |
| 6 mA | $V_{DDI}$ – 0.45 | 0.45 | 6 | 6 |
| 8 mA | $V_{DDI}$ – 0.45 | 0.45 | 8 | 8 |
| 10 mA | $V_{DDI}$ – 0.45 | 0.45 | 10 | 10 |
| 12 mA | $V_{DDI}$ – 0.45 | 0.45 | 12 | 12 |
| 16 mA[1] | $V_{DDI}$ – 0.45 | 0.45 | 16 | 16 |

1 16 mA Drive Strengths, All Slews, meet LPDDR JEDEC electrical compliance.

**TABLE 3-156: LPDDR-LVCMOS 1.8V AC SWITCHING CHARACTERISTICS FOR RECEIVER (FOR DDRIO I/O BANK WITH FIXED CODE—INPUT BUFFERS)**

| ODT (On Die Termination) | –1 | –Std | –1 | –Std | Unit |
|---|---|---|---|---|---|
| None | 1.968 | 2.315 | 2.099 | 2.47 | ns |

**TABLE 3-157: LPDDR-LVCMOS 1.8V AC SWITCHING CHARACTERISTICS FOR TRANSMITTER FOR DDRIO I/O BANK (OUTPUT AND TRISTATE BUFFERS)**

| Output Drive Selection | Slew Control | $T_{DP}$ | | $T_{ZL}$ | | $T_{ZH}$ | | $T_{HZ}$[1] | | $T_{LZ}$[1] | | Unit |
|---|---|---|---|---|---|---|---|---|---|---|---|---|
| | | –1 | –Std | –1 | –Std | –1 | –Std | –1 | –Std | –1 | –Std | |
| 2 mA | slow | 4.234 | 4.981 | 3.646 | 4.29 | 4.245 | 4.995 | 4.908 | 5.774 | 4.434 | 5.216 | ns |
| | medium | 3.824 | 4.498 | 3.282 | 3.861 | 3.834 | 4.511 | 4.625 | 5.441 | 4.116 | 4.843 | ns |
| | medium_fast | 3.627 | 4.267 | 3.111 | 3.66 | 3.637 | 4.279 | 4.481 | 5.272 | 3.984 | 4.687 | ns |


© 2026 Microchip Technology Inc. and its subsidiaries

**TABLE 3-157: LPDDR-LVCMOS 1.8V AC SWITCHING CHARACTERISTICS FOR TRANSMITTER FOR DDRIO I/O BANK (OUTPUT AND TRISTATE BUFFERS) (CONTINUED)**

| | | | | | | | | | | | | |
|---|---|---|---|---|---|---|---|---|---|---|---|---|
| | fast | 3.605 | 4.241 | 3.097 | 3.644 | 3.615 | 4.253 | 4.472 | 5.262 | 3.973 | 4.674 | ns |
| 4 mA | slow | 3.923 | 4.615 | 3.314 | 3.9 | 3.918 | 4.61 | 5.403 | 6.356 | 4.894 | 5.757 | ns |
| | medium | 3.518 | 4.138 | 2.961 | 3.484 | 3.515 | 4.135 | 5.121 | 6.025 | 4.561 | 5.366 | ns |
| | medium_fast | 3.321 | 3.907 | 2.783 | 3.275 | 3.317 | 3.903 | 4.966 | 5.843 | 4.426 | 5.206 | ns |
| | fast | 3.301 | 3.883 | 2.77 | 3.259 | 3.296 | 3.878 | 4.957 | 5.831 | 4.417 | 5.196 | ns |
| 6 mA | slow | 3.71 | 4.364 | 3.104 | 3.652 | 3.702 | 4.355 | 5.62 | 6.612 | 5.08 | 5.977 | ns |
| | medium | 3.333 | 3.921 | 2.779 | 3.27 | 3.325 | 3.913 | 5.346 | 6.289 | 4.777 | 5.62 | ns |
| | medium_fast | 3.155 | 3.712 | 2.62 | 3.083 | 3.146 | 3.702 | 5.21 | 6.13 | 4.657 | 5.479 | ns |
| | fast | 3.134 | 3.688 | 2.608 | 3.068 | 3.125 | 3.677 | 5.202 | 6.12 | 4.648 | 5.468 | ns |
| 8 mA | slow | 3.619 | 4.258 | 3.007 | 3.538 | 3.607 | 4.244 | 5.815 | 6.841 | 5.249 | 6.175 | ns |
| | medium | 3.246 | 3.819 | 2.686 | 3.16 | 3.236 | 3.807 | 5.542 | 6.52 | 4.936 | 5.807 | ns |
| | medium_fast | 3.066 | 3.607 | 2.525 | 2.971 | 3.054 | 3.593 | 5.405 | 6.359 | 4.811 | 5.66 | ns |
| | fast | 3.046 | 3.584 | 2.513 | 2.957 | 3.034 | 3.57 | 5.401 | 6.353 | 4.803 | 5.651 | ns |
| 10 mA | slow | 3.498 | 4.115 | 2.878 | 3.386 | 3.481 | 4.096 | 6.046 | 7.113 | 5.444 | 6.404 | ns |
| | medium | 3.138 | 3.692 | 2.569 | 3.023 | 3.126 | 3.678 | 5.782 | 6.803 | 5.129 | 6.034 | ns |
| | medium_fast | 2.966 | 3.489 | 2.414 | 2.841 | 2.951 | 3.472 | 5.666 | 6.665 | 5.013 | 5.897 | ns |
| | fast | 2.945 | 3.464 | 2.401 | 2.826 | 2.93 | 3.448 | 5.659 | 6.658 | 5.003 | 5.886 | ns |
| 12 mA | slow | 3.417 | 4.02 | 2.807 | 3.303 | 3.401 | 4.002 | 6.083 | 7.156 | 5.464 | 6.428 | ns |
| | medium | 3.076 | 3.618 | 2.519 | 2.964 | 3.063 | 3.604 | 5.828 | 6.856 | 5.176 | 6.089 | ns |
| | medium_fast | 2.913 | 3.427 | 2.376 | 2.795 | 2.898 | 3.41 | 5.725 | 6.736 | 5.072 | 5.966 | ns |
| | fast | 2.894 | 3.405 | 2.362 | 2.78 | 2.879 | 3.388 | 5.715 | 6.724 | 5.064 | 5.957 | ns |
| 16 mA | slow | 3.366 | 3.96 | 2.751 | 3.237 | 3.348 | 3.939 | 6.226 | 7.324 | 5.576 | 6.56 | ns |
| | medium | 3.03 | 3.565 | 2.47 | 2.906 | 3.017 | 3.55 | 5.981 | 7.036 | 5.282 | 6.214 | ns |
| | medium_fast | 2.87 | 3.377 | 2.328 | 2.739 | 2.854 | 3.358 | 5.895 | 6.935 | 5.18 | 6.094 | ns |
| | fast | 2.853 | 3.357 | 2.314 | 2.723 | 2.837 | 3.338 | 5.889 | 6.929 | 5.177 | 6.09 | ns |

1 Delay increases with drive strength are inherent to built-in slew control circuitry for SSO management).

## 3.7 Differential I/O Standards

Configuration of the I/O modules as a differential pair is handled by Microchip FPGA Products Group Libero software when the user instantiates a differential I/O macro in the design. Differential I/Os can also be used in conjunction with the embedded Input Register (InReg), Output Register (OutReg), Enable Register (EnReg), and Double Data Rate (DDR) registers.

### 3.7.1 LVDS

Low-Voltage Differential Signaling (ANSI/TIA/EIA-644) is a high-speed, differential I/O standard.

**Minimum and Maximum Input and Output Levels**

**TABLE 3-158: LVDS RECOMMENDED DC OPERATING CONDITIONS**

| Parameter | Symbol | Min. | Typ. | Max. | Unit | Conditions |
|---|---|---|---|---|---|---|
| Supply voltage | $V_{DDI}$ | 2.375 | 2.5 | 2.625 | V | 2.5V range |
| Supply voltage | $V_{DDI}$ | 3.15 | 3.3 | 3.45 | V | 3.3V range |

**TABLE 3-159: LVDS DC INPUT VOLTAGE SPECIFICATION**

| Parameter | Symbol | Min. | Max. | Unit | Conditions |
|---|---|---|---|---|---|
| DC Input voltage | $V_I$ | 0 | 2.925 | V | 2.5V range |

**TABLE 3-159: LVDS DC INPUT VOLTAGE SPECIFICATION (CONTINUED)**

| | | | | | |
|---|---|---|---|---|---|
| DC input voltage | $V_I$ | 0 | 3.45 | V | 3.3V range |
| Input current high[1] | $I_{IH}$ (DC) | — | — | — | — |
| Input current low[1] | $I_{IL}$ (DC) | — | — | — | — |

1 See Table 3-22.

**TABLE 3-160: LVDS DC OUTPUT VOLTAGE SPECIFICATION**

| Parameter | Symbol | Min. | Typ. | Max. | Unit |
|---|---|---|---|---|---|
| DC output logic high | $V_{OH}$ | 1.25 | 1.425 | 1.6 | V |
| DC output logic low | $V_{OL}$ | 0.9 | 1.075 | 1.25 | V |

**TABLE 3-161: LVDS DC DIFFERENTIAL VOLTAGE SPECIFICATION[1]**

| Parameter | Symbol | Min. | Typ. | Max. | Unit |
|---|---|---|---|---|---|
| Differential output voltage swing | $V_{OD}$ | 250 | 350 | 450 | mV |
| Output common mode voltage | $V_{OCM}$ | 1.125 | 1.25 | 1.375 | V |
| Input common mode voltage | $V_{ICM}$ | 0.05 | 1.25 | 2.35 | V |
| Input differential voltage | $V_{ID}$ | 100 | 350 | 600 | mV |

1 when $V_{ID}$ is < 300 mV, the input signal is delayed by up to an additional 450 ps for LVDS25 and 280 ps for LVDS33. This delay is not accounted in the timing model. Clock insertion delays, propagation delays, and I/O to FF delays are marginally affected. Adding a parallel termination resistor of 200Ω ±5% across the receiver pins can mitigate this additional delay when $V_{ID}$ is < 300 mV.

**TABLE 3-162: LVDS MINIMUM AND MAXIMUM AC SWITCHING SPEED**

| Parameter | Symbol | Max. | Unit | Conditions |
|---|---|---|---|---|
| Maximum data rate (for MSIO I/O bank) | $D_{MAX}$ | 535 | Mbps | AC loading: 12 pF/100Ω differential load |
| Maximum data rate (for MSIOD I/O bank) no pre-emphasis | $D_{MAX}$ | 620 | Mbps | AC loading: 10 pF/100Ω differential load |
| | | 700 | Mbps | AC loading: 2 pF/100Ω differential load |

**TABLE 3-163: LVDS AC IMPEDANCE SPECIFICATIONS**

| Parameter | Symbol | Typ. | Max. | Unit |
|---|---|---|---|---|
| Termination resistance | RT | 100 | | Ω |

**TABLE 3-164: LVDS AC TEST PARAMETER SPECIFICATIONS**

| Parameter | Symbol | Typ. | Unit |
|---|---|---|---|
| Measuring/trip point for data path | $V_{TRIP}$ | Cross point | V |
| Resistance for enable path ($T_{ZH}$, $T_{ZL}$, $T_{HZ}$, $T_{LZ}$) | $R_{ENT}$ | 2K | Ω |
| Capacitive loading for enable path ($T_{ZH}$, $T_{ZL}$, $T_{HZ}$, $T_{LZ}$) | $C_{ENT}$ | 5 | pF |

### LVDS25 AC Switching Characteristics

Worst commercial-case conditions: $T_J$ = 85 °C, $V_{DD}$ = 1.14V, and $V_{DDI}$ = 2.375V.

**TABLE 3-165: LVDS25 RECEIVER CHARACTERISTICS FOR MSIO I/O BANK (INPUT BUFFERS)**

| On-Die Termination (ODT) | $T_{PY}$ | | Unit |
|---|---|---|---|
| | –1 | –Std | |
| None | 2.774 | 3.263 | ns |
| 100 | 2.775 | 3.264 | ns |


© 2026 Microchip Technology Inc. and its subsidiaries

**TABLE 3-166: LVDS25 RECEIVER CHARACTERISTICS FOR MSIOD I/O BANK (INPUT BUFFERS)**

| On-Die Termination (ODT) | $T_{PY}$ | | Unit |
|---|---|---|---|
| | –1 | –Std | |
| None | 2.554 | 3.004 | ns |
| 100 | 2.549 | 2.999 | ns |

**TABLE 3-167: LVDS25 TRANSMITTER CHARACTERISTICS FOR MSIO I/O BANK (OUTPUT AND TRISTATE BUFFERS)**

| $T_{DP}$ | | $T_{ZL}$ | | $T_{ZH}$ | | $T_{HZ}$ | | $T_{LZ}$ | | Unit |
|---|---|---|---|---|---|---|---|---|---|---|
| –1 | –Std | –1 | –Std | –1 | –Std | –1 | –Std | –1 | –Std | |
| 2.136 | 2.513 | 2.416 | 2.842 | 2.402 | 2.825 | 2.423 | 2.85 | 2.409 | 2.833 | ns |

**TABLE 3-168: LVDS25 TRANSMITTER CHARACTERISTICS FOR MSIOD I/O BANK (OUTPUT AND TRISTATE BUFFERS)**

| | $T_{DP}$ | | $T_{ZL}$ | | $T_{ZH}$ | | $T_{HZ}$ | | $T_{LZ}$ | | Unit |
|---|---|---|---|---|---|---|---|---|---|---|---|
| | –1 | –Std | –1 | –Std | –1 | –Std | –1 | –Std | –1 | –Std | |
| No pre-emphasis | 1.61 | 1.893 | 1.749 | 2.058 | 1.735 | 2.041 | 1.897 | 2.231 | 1.866 | 2.195 | ns |
| Min pre-emphasis | 1.527 | 1.796 | 1.757 | 2.067 | 1.744 | 2.052 | 1.905 | 2.241 | 1.876 | 2.207 | ns |
| Med pre-emphasis | 1.496 | 1.76 | 1.765 | 2.077 | 1.751 | 2.06 | 1.914 | 2.252 | 1.884 | 2.216 | ns |

**LVDS33 AC Switching Characteristics**

**TABLE 3-169: LVDS33 RECEIVER CHARACTERISTICS FOR MSIO I/O BANK (INPUT BUFFERS)**

| On Die Termination (ODT) | $T_{PY}$ | | Unit |
|---|---|---|---|
| | –1 | –Std | |
| None | 2.572 | 3.025 | ns |
| 100 | 2.569 | 3.023 | ns |

**TABLE 3-170: LVDS33 TRANSMITTER CHARACTERISTICS FOR MSIO I/O BANK (OUTPUT AND TRISTATE BUFFERS)**

| $T_{DP}$ | | $T_{ZL}$ | | $T_{ZH}$ | | $T_{HZ}$ | | $T_{LZ}$ | | Unit |
|---|---|---|---|---|---|---|---|---|---|---|
| –1 | –Std | –1 | –Std | –1 | –Std | –1 | –Std | –1 | –Std | |
| 1.942 | 2.284 | 1.98 | 2.33 | 1.97 | 2.318 | 1.953 | 2.298 | 1.96 | 2.307 | ns |

### 3.7.2 B-LVDS

Bus LVDS (B-LVDS) specifications extend the existing LVDS standard to high-performance multipoint bus applications. Multidrop and multipoint bus configurations may contain any combination of drivers, receivers, and transceivers.

**Minimum and Maximum DC/AC Input and Output Levels Specification**

**TABLE 3-171: B-LVDS RECOMMENDED DC OPERATING CONDITIONS**

| Parameter | Symbol | Min. | Typ. | Max. | Unit |
|---|---|---|---|---|---|
| Supply voltage | $V_{DDI}$ | 2.375 | 2.5 | 2.625 | V |

**TABLE 3-172: B-LVDS DC INPUT VOLTAGE SPECIFICATION**

| Parameter | Symbol | Min. | Max. | Unit |
|---|---|---|---|---|
| DC input voltage | $V_I$ | 0 | 2.925 | V |
| Input current high[1] | $I_{IH}$ (DC) | — | — | — |

**TABLE 3-172: B-LVDS DC INPUT VOLTAGE SPECIFICATION (CONTINUED)**

| | | | | |
|---|---|---|---|---|
| Input current low[1] | $I_{IL}$ (DC) | — | — | — |

1 See Table 3-22.

**TABLE 3-173: B-LVDS DC OUTPUT VOLTAGE SPECIFICATION (FOR MSIO I/O BANK ONLY)**

| Parameter | Symbol | Min. | Typ. | Max. | Unit |
|---|---|---|---|---|---|
| DC output logic high | $V_{OH}$ | 1.25 | 1.425 | 1.6 | V |
| DC output logic low | $V_{OL}$ | 0.9 | 1.075 | 1.25 | V |

**TABLE 3-174: B-LVDS DC DIFFERENTIAL VOLTAGE SPECIFICATION**

| Parameter | Symbol | Min. | Max. | Unit |
|---|---|---|---|---|
| Differential output voltage swing (for MSIO I/O bank only) | $V_{OD}$ | 65 | 460 | mV |
| Output common mode voltage (for MSIO I/O bank only) | $V_{OCM}$ | 1.1 | 1.5 | V |
| Input common mode voltage | $V_{ICM}$ | 0.05 | 2.4 | V |
| Input differential voltage | $V_{ID}$ | 0.1 | $V_{DDI}$ | V |

**TABLE 3-175: B-LVDS MINIMUM AND MAXIMUM AC SWITCHING SPEED**

| Parameter | Symbol | Max. | Unit | Conditions |
|---|---|---|---|---|
| Maximum data rate (for MSIO I/O bank) | $D_{MAX}$ | 500 | Mbps | AC loading: 2 pF/100Ω differential load |

**TABLE 3-176: B-LVDS AC IMPEDANCE SPECIFICATIONS**

| Parameter | Symbol | Typ | Unit |
|---|---|---|---|
| Termination resistance | $R_T$ | 27 | Ω |

**TABLE 3-177: B-LVDS AC TEST PARAMETER SPECIFICATIONS**

| Parameter | Symbol | Typ. | Unit |
|---|---|---|---|
| Measuring/trip point for data path | $V_{TRIP}$ | Cross point | V |
| Resistance for enable path ($T_{ZH}$, $T_{ZL}$, $T_{HZ}$, $T_{LZ}$) | $R_{ENT}$ | 2K | Ω |
| Capacitive loading for enable path ($T_{ZH}$, $T_{ZL}$, $T_{HZ}$, $T_{LZ}$) | $C_{ENT}$ | 5 | pF |

**AC Switching Characteristics**

Worst commercial-case conditions: $T_J$ = 85 °C, $V_{DD}$ = 1.14V, and $V_{DDI}$ = 2.375V.

**TABLE 3-178: B-LVDS AC SWITCHING CHARACTERISTICS FOR RECEIVER FOR MSIO I/O BANK (INPUT BUFFERS)**

| On-Die Termination (ODT) | $T_{PY}$ | | Unit |
|---|---|---|---|
| | –1 | –Std | |
| None | 2.738 | 3.221 | ns |
| 100 | 2.735 | 3.218 | ns |

**TABLE 3-179: B-LVDS AC SWITCHING CHARACTERISTICS FOR RECEIVER FOR MSIOD I/O BANK (INPUT BUFFERS)**

| On-Die Termination (ODT) | $T_{PY}$ | | Unit |
|---|---|---|---|
| | –1 | –Std | |
| None | 2.495 | 2.934 | ns |
| 100 | 2.495 | 2.935 | ns |


© 2026 Microchip Technology Inc. and its subsidiaries

**TABLE 3-180: B-LVDS AC SWITCHING CHARACTERISTICS FOR TRANSMITTER (FOR MSIO I/O BANK - OUTPUT AND TRISTATE BUFFERS)**

| $T_{DP}$ | | $T_{ZL}$ | | $T_{ZH}$ | | $T_{HZ}$ | | $T_{LZ}$ | | Unit |
|---|---|---|---|---|---|---|---|---|---|---|
| –1 | –Std | –1 | –Std | –1 | –Std | –1 | –Std | –1 | –Std | |
| 2.258 | 2.656 | 2.343 | 2.756 | 2.329 | 2.74 | 2.12 | 2.494 | 2.123 | 2.497 | ns |

### 3.7.3 M-LVDS

M-LVDS specifications extend the existing LVDS standard to high-performance multipoint bus applications. Multidrop and multipoint bus configurations may contain any combination of drivers, receivers, and transceivers.

**Minimum and Maximum Input and Output Levels**

**TABLE 3-181: M-LVDS RECOMMENDED DC OPERATING CONDITIONS**

| Parameter | Symbol | Min. | Typ. | Max. | Unit |
|---|---|---|---|---|---|
| Supply voltage[1] | $V_{DDI}$ | 2.375 | 2.5 | 2.625 | V |

1 Only M-LVDS TYPE I is supported.

**TABLE 3-182: M-LVDS DC INPUT VOLTAGE SPECIFICATION**

| Parameter | Symbol | Min. | Max. | Unit |
|---|---|---|---|---|
| DC input voltage | $V_I$ | 0 | 2.925 | V |
| Input current high[1] | $I_{IH}$ (DC) | — | — | — |
| Input current low[2] | $I_{IL}$ (DC) | — | — | — |

1 See Table 3-22.

**TABLE 3-183: M-LVDS DC VOLTAGE SPECIFICATION OUTPUT VOLTAGE SPECIFICATION (FOR MSIO I/O BANK ONLY)**

| Parameter | Symbol | Min. | Typ. | Max. | Unit |
|---|---|---|---|---|---|
| DC output logic high | $V_{OH}$ | 1.25 | 1.425 | 1.6 | V |
| DC output logic low | $V_{OL}$ | 0.9 | 1.075 | 1.25 | V |

**TABLE 3-184: M-LVDS DIFFERENTIAL VOLTAGE SPECIFICATION**

| Parameter | Symbol | Min. | Max. | Unit |
|---|---|---|---|---|
| Differential output voltage swing (for MSIO I/O bank only) | $V_{OD}$ | 300 | 650 | mV |
| Output common mode voltage (for MSIO I/O bank only) | $V_{OCM}$ | 0.3 | 2.1 | V |
| Input common mode voltage | $V_{ICM}$ | 0.3 | 1.2 | V |
| Input differential voltage | $V_{ID}$ | 50 | 2400 | mV |

**TABLE 3-185: M-LVDS MINIMUM AND MAXIMUM AC SWITCHING SPEED FOR MSIO I/O BANK**

| Parameter | Symbol | Max. | Unit | Conditions |
|---|---|---|---|---|
| Maximum data rate | $D_{MAX}$ | 500 | Mbps | AC loading: 2 pF/100Ω differential load |

**TABLE 3-186: M-LVDS AC IMPEDANCE SPECIFICATIONS**

| Parameter | Symbol | Typ. | Unit |
|---|---|---|---|
| Termination resistance | $R_T$ | 50 | Ω |

**TABLE 3-187: M-LVDS AC TEST PARAMETER SPECIFICATIONS**

| Parameter | Symbol | Typ. | Unit |
|---|---|---|---|
| Measuring/trip point for data path | $V_{TRIP}$ | Cross point | V |
| Resistance for enable path ($T_{ZH}$, $T_{ZL}$, $T_{HZ}$, $T_{LZ}$) | $R_{ENT}$ | 2K | Ω |
| Capacitive loading for enable path ($T_{ZH}$, $T_{ZL}$, $T_{HZ}$, $T_{LZ}$) | $C_{ENT}$ | 5 | pF |

**AC Switching Characteristics**

Worst commercial-case conditions: $T_J$ = 85 °C, $V_{DD}$ = 1.14 V, and $V_{DDI}$ = 2.375V.

**TABLE 3-188: M-LVDS AC SWITCHING CHARACTERISTICS FOR RECEIVER (FOR MSIO I/O BANK —INPUT BUFFERS)**

| On-Die Termination (ODT) | $T_{PY}$ | | Unit |
|---|---|---|---|
| | –1 | –Std | |
| None | 2.738 | 3.221 | ns |
| 100 | 2.735 | 3.218 | ns |

**TABLE 3-189: M-LVDS AC SWITCHING CHARACTERISTICS FOR RECEIVER (FOR MSIOD I/O BANK—INPUT BUFFERS)**

| On-Die Termination (ODT) | $T_{PY}$ | | Unit |
|---|---|---|---|
| | –1 | –Std | |
| None | 2.495 | 2.934 | ns |
| 100 | 2.495 | 2.935 | ns |

**TABLE 3-190: M-LVDS AC SWITCHING CHARACTERISTICS FOR TRANSMITTER (FOR MSIO I/O BANK—OUTPUT AND TRISTATE BUFFERS)**

| $T_{DP}$ | | $T_{ZL}$ | | $T_{ZH}$ | | $T_{HZ}$ | | $T_{LZ}$ | | Unit |
|---|---|---|---|---|---|---|---|---|---|---|
| –1 | –Std | –1 | –Std | –1 | –Std | –1 | –Std | –1 | –Std | |
| 2.258 | 2.656 | 2.348 | 2.762 | 2.334 | 2.746 | 2.123 | 2.497 | 2.125 | 2.5 | ns |

### 3.7.4 MINI-LVDS

Mini-LVDS is an unidirectional interface from the timing controller to the column drivers and is designed to the Texas Instruments Standard SLDA007A.

**Mini-LVDS Minimum and Maximum Input and Output Levels**

**TABLE 3-191: MINI-LVDS RECOMMENDED DC OPERATING CONDITIONS**

| Parameter | Symbol | Min. | Typ. | Max. | Unit |
|---|---|---|---|---|---|
| Supply voltage | $V_{DDI}$ | 2.375 | 2.5 | 2.625 | V |

**TABLE 3-192: MINI-LVDS DC INPUT VOLTAGE SPECIFICATION**

| Parameter | Symbol | Min. | Max. | Unit |
|---|---|---|---|---|
| DC Input voltage | $V_I$ | 0 | 2.925 | V |

**TABLE 3-193: MINI-LVDS DC OUTPUT VOLTAGE SPECIFICATION**

| Parameter | Symbol | Min. | Typ. | Max. | Unit |
|---|---|---|---|---|---|
| DC output logic high | $V_{OH}$ | 1.25 | 1.425 | 1.6 | V |
| DC output logic low | $V_{OL}$ | 0.9 | 1.075 | 1.25 | V |


© 2026 Microchip Technology Inc. and its subsidiaries

**TABLE 3-194: MINI-LVDS DC DIFFERENTIAL VOLTAGE SPECIFICATION**

| Parameter | Symbol | Min. | Max. | Unit |
|---|---|---|---|---|
| Differential output voltage swing | $V_{OD}$ | 300 | 600 | mV |
| Output common mode voltage | $V_{OCM}$ | 1 | 1.4 | V |
| Input common mode voltage | $V_{ICM}$ | 0.3 | 1.2 | V |
| Input differential voltage | $V_{ID}$ | 100 | 600 | mV |

**TABLE 3-195: MINI-LVDS MINIMUM AND MAXIMUM AC SWITCHING SPEED**

| Parameter | Symbol | Max. | Unit | Conditions |
|---|---|---|---|---|
| Maximum data rate (for MSIO I/O bank) | $D_{MAX}$ | 520 | Mbps | AC loading: 2 pF/100Ω differential load |
| Maximum data rate (for MSIOD I/O bank) | $D_{MAX}$ | 700 | Mbps | AC loading: 2 pF/100Ω differential load |

**TABLE 3-196: MINI-LVDS AC IMPEDANCE SPECIFICATIONS**

| Parameter | Symbol | Typ. | Unit |
|---|---|---|---|
| Termination resistance | $R_T$ | 100 | Ω |

**TABLE 3-197: MINI-LVDS AC TEST PARAMETER SPECIFICATIONS**

| Parameter | Symbol | Typ. | Unit |
|---|---|---|---|
| Measuring/trip point for data path | $V_{TRIP}$ | Cross point | V |
| Resistance for enable path ($T_{ZH}$, $T_{ZL}$, $T_{HZ}$, $T_{LZ}$) | $R_{ENT}$ | 2K | Ω |
| Capacitive loading for enable path ($T_{ZH}$, $T_{ZL}$, $T_{HZ}$, $T_{LZ}$) | $C_{ENT}$ | 5 | pF |

**AC Switching Characteristics**

Worst commercial-case conditions: $T_J$ = 85 °C, $V_{DD}$ = 1.14V, and $V_{DDI}$ = 2.375V.

**TABLE 3-198: MINI-LVDS AC SWITCHING CHARACTERISTICS FOR RECEIVER (FOR MSIO I/O BANK—INPUT BUFFERS)**

| On-Die Termination (ODT) | $T_{PY}$ | | Unit |
|---|---|---|---|
| | –1 | –Std | |
| None | 2.855 | 3.359 | ns |
| 100 | 2.85 | 3.353 | ns |
| None | 2.602 | 3.061 | ns |
| 100 | 2.597 | 3.055 | ns |

**TABLE 3-199: MINI-LVDS AC SWITCHING CHARACTERISTICS FOR TRANSMITTER FOR MSIO I/O BANK (OUTPUT AND TRISTATE BUFFERS)**

| $T_{DP}$ | | $T_{ZL}$ | | $T_{ZH}$ | | $T_{HZ}$ | | $T_{LZ}$ | | Unit |
|---|---|---|---|---|---|---|---|---|---|---|
| –1 | –Std | –1 | –Std | –1 | –Std | –1 | –Std | –1 | –Std | |
| 2.097 | 2.467 | 2.308 | 2.715 | 2.296 | 2.701 | 1.964 | 2.31 | 1.949 | 2.293 | ns |

**TABLE 3-200: MINI-LVDS AC SWITCHING CHARACTERISTICS FOR TRANSMITTER (FOR MSIOD I/O BANK—OUTPUT AND TRISTATE BUFFERS)**

| | $T_{DP}$ | | $T_{ZL}$ | | $T_{ZH}$ | | $T_{HZ}$ | | $T_{LZ}$ | | Unit |
|---|---|---|---|---|---|---|---|---|---|---|---|
| | –1 | –Std | –1 | –Std | –1 | –Std | –1 | –Std | –1 | –Std | |

**TABLE 3-200: MINI-LVDS AC SWITCHING CHARACTERISTICS FOR TRANSMITTER (FOR MSIOD I/O BANK—OUTPUT AND TRISTATE BUFFERS)**

| | | | | | | | | | | | |
|---|---|---|---|---|---|---|---|---|---|---|---|
| No pre-emphasis | 1.614 | 1.899 | 1.562 | 1.837 | 1.553 | 1.826 | 1.593 | 1.874 | 1.578 | 1.856 | ns |
| Min pre-emphasis | 1.604 | 1.887 | 1.745 | 2.053 | 1.731 | 2.036 | 1.892 | 2.225 | 1.861 | 2.189 | ns |
| Med pre-emphasis | 1.521 | 1.79 | 1.753 | 2.062 | 1.737 | 2.043 | 1.9 | 2.235 | 1.868 | 2.197 | ns |
| Max pre-emphasis | 1.492 | 1.754 | 1.762 | 2.073 | 1.745 | 2.052 | 1.91 | 2.247 | 1.876 | 2.206 | ns |

### 3.7.5 RSDS

Reduced Swing Differential Signaling (RSDS) is similar to an LVDS high-speed interface using differential signaling. RSDS has a similar implementation to LVDS devices and is only intended for point-to-point applications.

**Minimum and Maximum Input and Output Levels**

**TABLE 3-201: RSDS RECOMMENDED DC OPERATING CONDITIONS**

| Parameter | Symbol | Min. | Typ. | Max. | Unit |
|---|---|---|---|---|---|
| Supply voltage | $V_{DDI}$ | 2.375 | 2.5 | 2.625 | V |

**TABLE 3-202: RSDS DC INPUT VOLTAGE SPECIFICATION**

| Parameter | Symbol | Min. | Max. | Unit |
|---|---|---|---|---|
| DC input voltage | $V_I$ | 0 | 2.925 | V |

**TABLE 3-203: RSDS DC OUTPUT VOLTAGE SPECIFICATION**

| Parameter | Symbol | Min. | Typ. | Max. | Unit |
|---|---|---|---|---|---|
| DC output logic high | $V_{OH}$ | 1.25 | 1.425 | 1.6 | V |
| DC output logic low | $V_{OL}$ | 0.9 | 1.075 | 1.25 | V |

**TABLE 3-204: RSDS DIFFERENTIAL VOLTAGE SPECIFICATION**

| Parameter | Symbol | Min. | Max. | Unit |
|---|---|---|---|---|
| Differential output voltage swing | $V_{OD}$ | 100 | 600 | mV |
| Output common mode voltage | $V_{OCM}$ | 0.5 | 1.5 | V |
| Input common mode voltage | $V_{ICM}$ | 0.3 | 1.5 | V |
| Input differential voltage | $V_{ID}$ | 100 | 600 | mV |

**TABLE 3-205: RSDS MINIMUM AND MAXIMUM AC SWITCHING SPEED**

| Parameter | Symbol | Max. | Unit | Conditions |
|---|---|---|---|---|
| Maximum data rate (for MSIO I/O bank) | $D_{MAX}$ | 520 | Mbps | AC loading: 2 pF/100Ω differential load |
| Maximum data rate (for MSIOD I/O bank) | $D_{MAX}$ | 700 | Mbps | AC loading: 2 pF/100Ω differential load |

**TABLE 3-206: RSDS AC IMPEDANCE SPECIFICATIONS**

| Parameter | Symbol | Typ. | Unit |
|---|---|---|---|
| Termination resistance | RT | 100 | Ω |

**TABLE 3-207: RSDS AC TEST PARAMETER SPECIFICATIONS**

| Parameter | Symbol | Typ. | Unit |
|---|---|---|---|
| Measuring/trip point for data path | $V_{TRIP}$ | Cross point | V |
| Resistance for enable path ($T_{ZH}$, $T_{ZL}$, $T_{HZ}$, $T_{LZ}$) | $R_{ENT}$ | 2K | Ω |
| Capacitive loading for enable path ($T_{ZH}$, $T_{ZL}$, $T_{HZ}$, $T_{LZ}$) | $C_{ENT}$ | 5 | pF |


© 2026 Microchip Technology Inc. and its subsidiaries

**AC Switching Characteristics**

Worst commercial-case conditions: $T_J$ = 85 °C, $V_{DD}$ = 1.14V, and $V_{DDI}$ = 2.375V.

**TABLE 3-208: RSDS AC SWITCHING CHARACTERISTICS FOR RECEIVER (FOR MSIO I/O BANK—INPUT BUFFERS)**

| On-Die Termination (ODT) | $T_{PY}$ | | Unit |
|---|---|---|---|
| | –1 | –Std | |
| None | 2.855 | 3.359 | ns |
| 100 | 2.85 | 3.353 | ns |

**TABLE 3-209: RSDS AC SWITCHING CHARACTERISTICS FOR RECEIVER (FOR MSIOD I/O BANK—INPUT BUFFERS)**

| On-Die Termination (ODT) | $T_{PY}$ | | Unit |
|---|---|---|---|
| | –1 | –Std | |
| None | 2.602 | 3.061 | ns |
| 100 | 2.597 | 3.055 | ns |

**TABLE 3-210: RSDS AC SWITCHING CHARACTERISTICS FOR TRANSMITTER (FOR MSIO I/O BANK—OUTPUT AND TRISTATE BUFFERS)**

| $T_{DP}$ | | $T_{ZL}$ | | $T_{ZH}$ | | $T_{HZ}$ | | $T_{LZ}$ | | Unit |
|---|---|---|---|---|---|---|---|---|---|---|
| –1 | –Std | –1 | –Std | –1 | –Std | –1 | –Std | –1 | –Std | |
| 2.097 | 2.467 | 2.303 | 2.709 | 2.291 | 2.695 | 1.961 | 2.307 | 1.947 | 2.29 | ns |

**TABLE 3-211: RSDS AC SWITCHING CHARACTERISTICS FOR TRANSMITTER (FOR MSIOD I/O BANK—OUTPUT AND TRISTATE BUFFERS)**

| | $T_{DP}$ | | $T_{ZL}$ | | $T_{ZH}$ | | $T_{HZ}$ | | $T_{LZ}$ | | Unit |
|---|---|---|---|---|---|---|---|---|---|---|---|
| | –1 | –Std | –1 | –Std | –1 | –Std | –1 | –Std | –1 | –Std | |
| No pre-emphasis | 1.614 | 1.899 | 1.559 | 1.834 | 1.55 | 1.823 | 1.59 | 1.87 | 1.575 | 1.852 | ns |
| Min pre-emphasis | 1.604 | 1.887 | 1.742 | 2.05 | 1.728 | 2.032 | 1.889 | 2.222 | 1.858 | 2.185 | ns |
| Med pre-emphasis | 1.521 | 1.79 | 1.753 | 2.062 | 1.737 | 2.043 | 1.9 | 2.235 | 1.868 | 2.197 | ns |
| Max pre-emphasis | 1.492 | 1.754 | 1.762 | 2.073 | 1.745 | 2.052 | 1.91 | 2.247 | 1.876 | 2.206 | ns |

### 3.7.6 LVPECL

Low-Voltage Positive Emitter-Coupled Logic (LVPECL) is another differential I/O standard. It requires that one data bit be carried through two signal lines. Similar to LVDS, two pins are needed. It also requires external resistor termination. IGLOO 2 and SmartFusion 2 SoC FPGAs support only LVPECL receivers and do not support LVPECL transmitters.

**Minimum and Maximum Input and Output Levels (Applicable to MSIO I/O Bank Only)**

**TABLE 3-212: LVPECL RECOMMENDED DC OPERATING CONDITIONS**

| Parameter | Symbol | Min. | Typ. | Max. | Unit |
|---|---|---|---|---|---|
| Supply voltage | $V_{DDI}$ | 3.15 | 3.3 | 3.45 | V |

**TABLE 3-213: LVPECL DC INPUT VOLTAGE SPECIFICATION**

| Parameter | Symbol | Min. | Max. | Unit |
|---|---|---|---|---|
| DC input voltage | $V_I$ | 0 | 3.45 | V |

**TABLE 3-214: LVPECL DC DIFFERENTIAL VOLTAGE SPECIFICATION**

| Parameter | Symbol | Min. | Typ. | Max. | Unit |
|---|---|---|---|---|---|
| Input common mode voltage | $V_{ICM}$ | 0.3 | | 2.8 | V |
| Input differential voltage | $V_{IDIFF}$ | 100 | 300 | 1,000 | mV |

**TABLE 3-215: LVPECL MINIMUM AND MAXIMUM AC SWITCHING SPEEDS**

| Parameter | Symbol | Max. | Unit |
|---|---|---|---|
| Maximum data rate | $D_{MAX}$ | 900 | Mbps |

**AC Switching Characteristics**

Worst commercial-case conditions: $T_J$ = 85 °C, $V_{DD}$ = 1.14V, and $V_{DDI}$ = 2.375V.

**TABLE 3-216: LVPECL RECEIVER CHARACTERISTICS FOR MSIO I/O BANK**

| On-Die Termination (ODT) | $T_{PY}$ | | Unit |
|---|---|---|---|
| | –1 | –Std | |
| None | 2.572 | 3.025 | ns |
| 100 | 2.569 | 3.023 | ns |

## 3.8 I/O Register Specifications

This section describes input and output register specifications.

### 3.8.1 INPUT REGISTER

**FIGURE 3-6: TIMING MODEL FOR INPUT REGISTER**

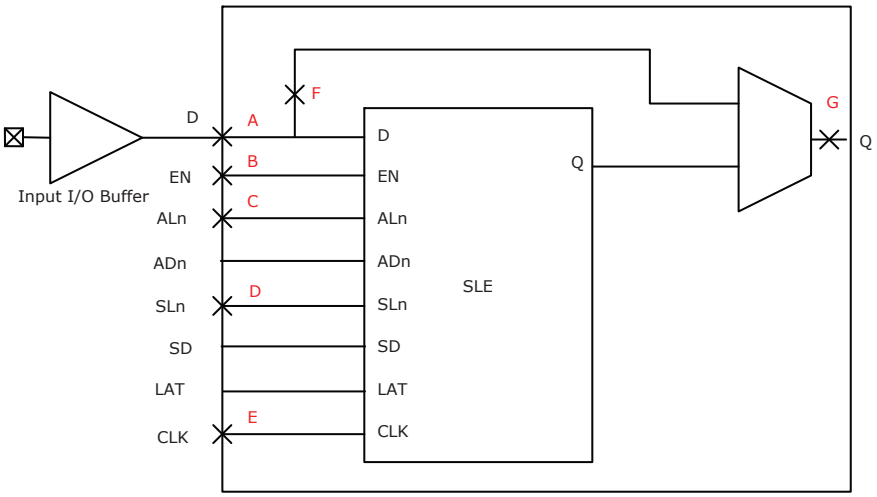



© 2026 Microchip Technology Inc. and its subsidiaries

**FIGURE 3-7: I/O REGISTER INPUT TIMING DIAGRAM**

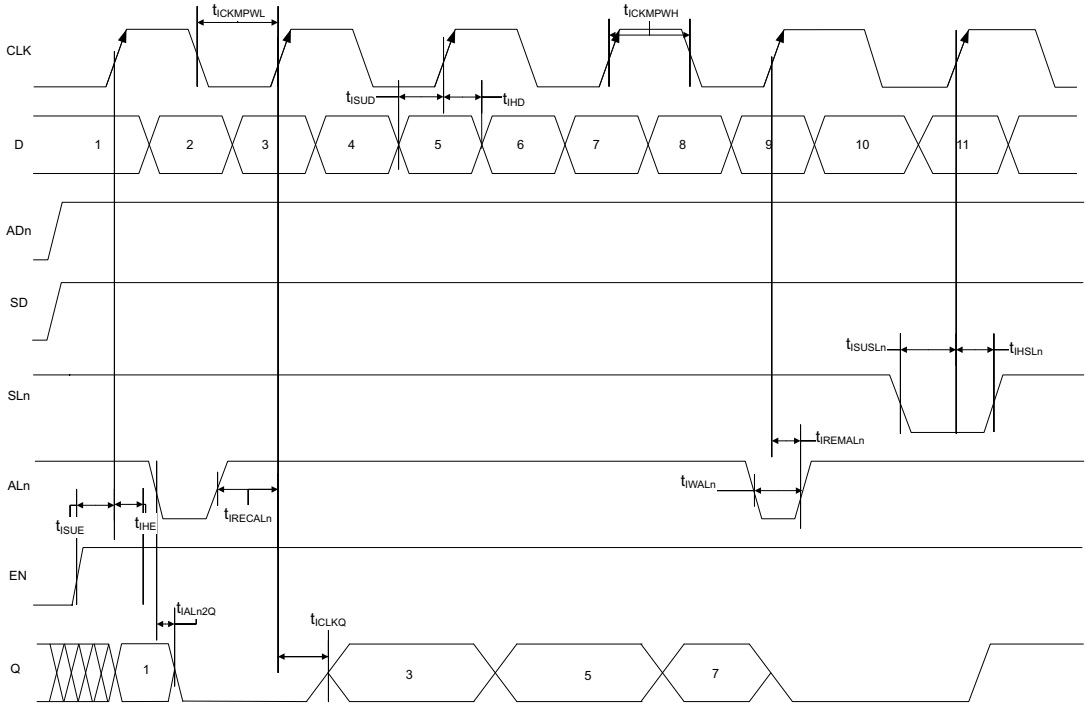


The following table lists the input data register propagation delays in worst commercial-case conditions when $T_J$ = 85 °C, $V_{DD}$ = 1.14V.

**TABLE 3-217: INPUT DATA REGISTER PROPAGATION DELAYS**

| Parameter | Symbol | Measuring Nodes (from, to)[1] | –1 | –Std | Unit |
|---|---|---|---|---|---|
| Bypass delay of the input register | $T_{IBYP}$ | F, G | 0.353 | 0.415 | ns |
| Clock-to-Q of the input register | $T_{ICLKQ}$ | E, G | 0.16 | 0.188 | ns |
| Data setup time for the input register | $T_{ISUD}$ | A, E | 0.357 | 0.421 | ns |
| Data hold time for the input register | $T_{IHD}$ | A, E | 0 | 0 | ns |
| Enable setup time for the input register | $T_{ISUE}$ | B, E | 0.46 | 0.542 | ns |
| Enable hold time for the input register | $T_{IHE}$ | B, E | 0 | 0 | ns |
| Synchronous load setup time for the input register | $T_{ISUSL}$ | D, E | 0.46 | 0.542 | ns |
| Synchronous load hold time for the input register | $T_{IHSL}$ | D, E | 0 | 0 | ns |
| Asynchronous clear-to-Q of the input register (ADn=1) | $T_{IALN2Q}$ | C, G | 0.625 | 0.735 | ns |
| Asynchronous preset-to-Q of the input register (ADn=0) | | C, G | 0.587 | 0.69 | ns |
| Asynchronous load removal time for the input register | $T_{IREMALN}$ | C, E | 0 | 0 | ns |
| Asynchronous load recovery time for the input register | $T_{IRECALN}$ | C, E | 0.074 | 0.087 | ns |
| Asynchronous load minimum pulse width for the input register | $T_{IWALN}$ | C, C | 0.304 | 0.357 | ns |
| Clock minimum pulse width high for the input register | $T_{ICKMPWH}$ | E, E | 0.075 | 0.088 | ns |
| Clock minimum pulse width low for the input register | $T_{ICKMPWL}$ | E, E | 0.159 | 0.187 | ns |

1 For the derating values at specific junction temperature and voltage supply levels, see Table 3-14 for derating values.

### 3.8.2 OUTPUT/ENABLE REGISTER

**FIGURE 3-8: TIMING MODEL FOR OUTPUT/ENABLE REGISTER**

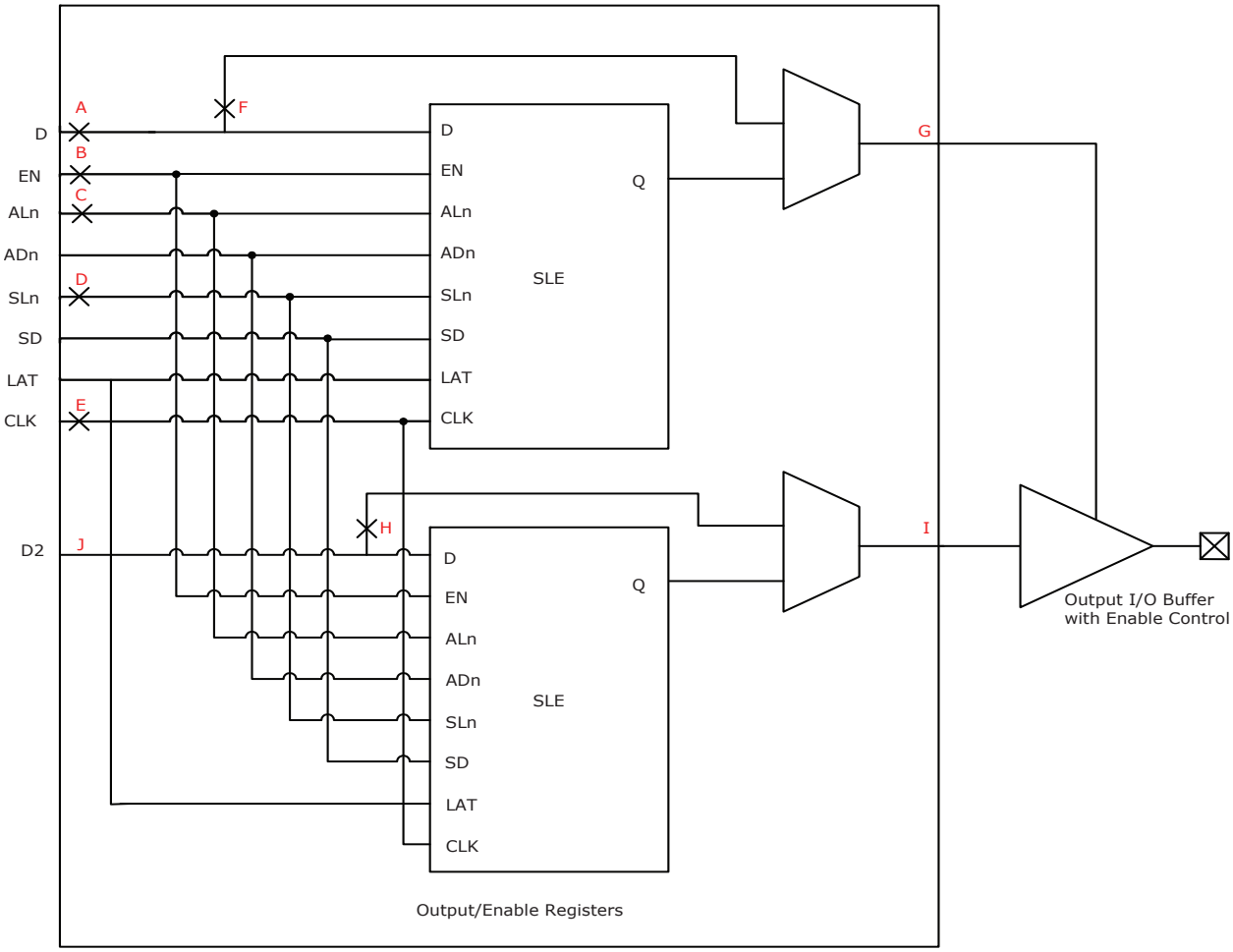



© 2026 Microchip Technology Inc. and its subsidiaries

**FIGURE 3-9: I/O REGISTER OUTPUT TIMING DIAGRAM**

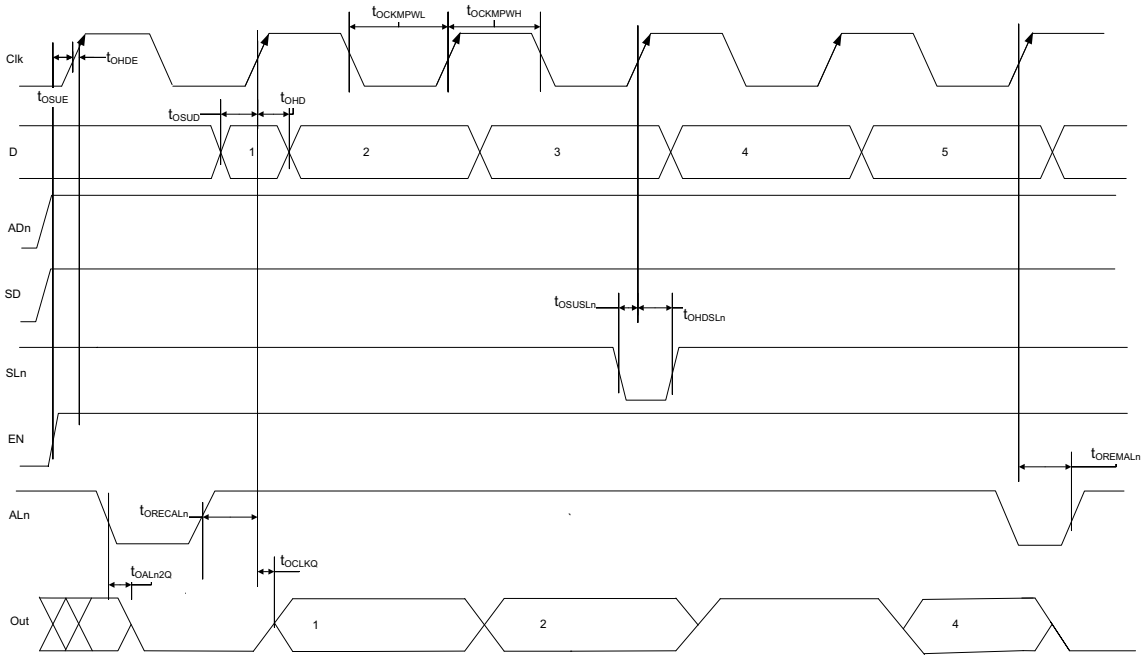


The following table lists the output/enable propagation delays in worst commercial-case conditions when $T_J$ = 85 °C, $V_{DD}$ = 1.14V.

**TABLE 3-218: OUTPUT/ENABLE DATA REGISTER PROPAGATION DELAYS**

| Parameter | Symbol | Measuring Nodes (from, to)[1] | –1 | –Std | Unit |
|---|---|---|---|---|---|
| Bypass delay of the output/enable register | $T_{OBYP}$ | F, G or H, I | 0.353 | 0.415 | ns |
| Clock-to-Q of the output/enable register | $T_{OCLKQ}$ | E, G or E, I | 0.263 | 0.309 | ns |
| Data setup time for the output/enable register | $T_{OSUD}$ | A, E or J, E | 0.19 | 0.223 | ns |
| Data hold time for the output/enable register | $T_{OHD}$ | A, E or J, E | 0 | 0 | ns |
| Enable setup time for the output/enable register | $T_{OSUE}$ | B, E | 0.419 | 0.493 | ns |
| Enable hold time for the output/enable register | $T_{OHE}$ | B, E | 0 | 0 | ns |
| Synchronous load setup time for the output/enable register | $T_{OSUSL}$ | D, E | 0.196 | 0.231 | ns |
| Synchronous load hold time for the output/enable register | $T_{OHSL}$ | D, E | 0 | 0 | ns |
| Asynchronous clear-to-q of the output/enable register (ADn = 1) | $T_{OALN2Q}$ | C, G or C, I | 0.505 | 0.594 | ns |
| Asynchronous preset-to-q of the output/enable register (ADn = 0) | | C, G or C, I | 0.528 | 0.621 | ns |
| Asynchronous load removal time for the output/enable register | $T_{OREMALN}$ | C, E | 0 | 0 | ns |
| Asynchronous load recovery time for the output/enable register | $T_{ORECALN}$ | C, E | 0.034 | 0.04 | ns |
| Asynchronous load minimum pulse width for the output/enable register | $T_{OWALN}$ | C, C | 0.304 | 0.357 | ns |
| Clock minimum pulse width high for the output/enable register | $T_{OCKMPWH}$ | E, E | 0.075 | 0.088 | ns |
| Clock minimum pulse width low for the output/enable register | $T_{OCKMPWL}$ | E, E | 0.159 | 0.187 | ns |

1 For the derating values at specific junction temperature and voltage supply levels, see Table 3-14 for derating values.

## 3.9 DDR Module Specification

This section describes input and output DDR module and timing specifications.

### 3.9.1 INPUT DDR MODULE

**FIGURE 3-10: INPUT DDR MODULE**

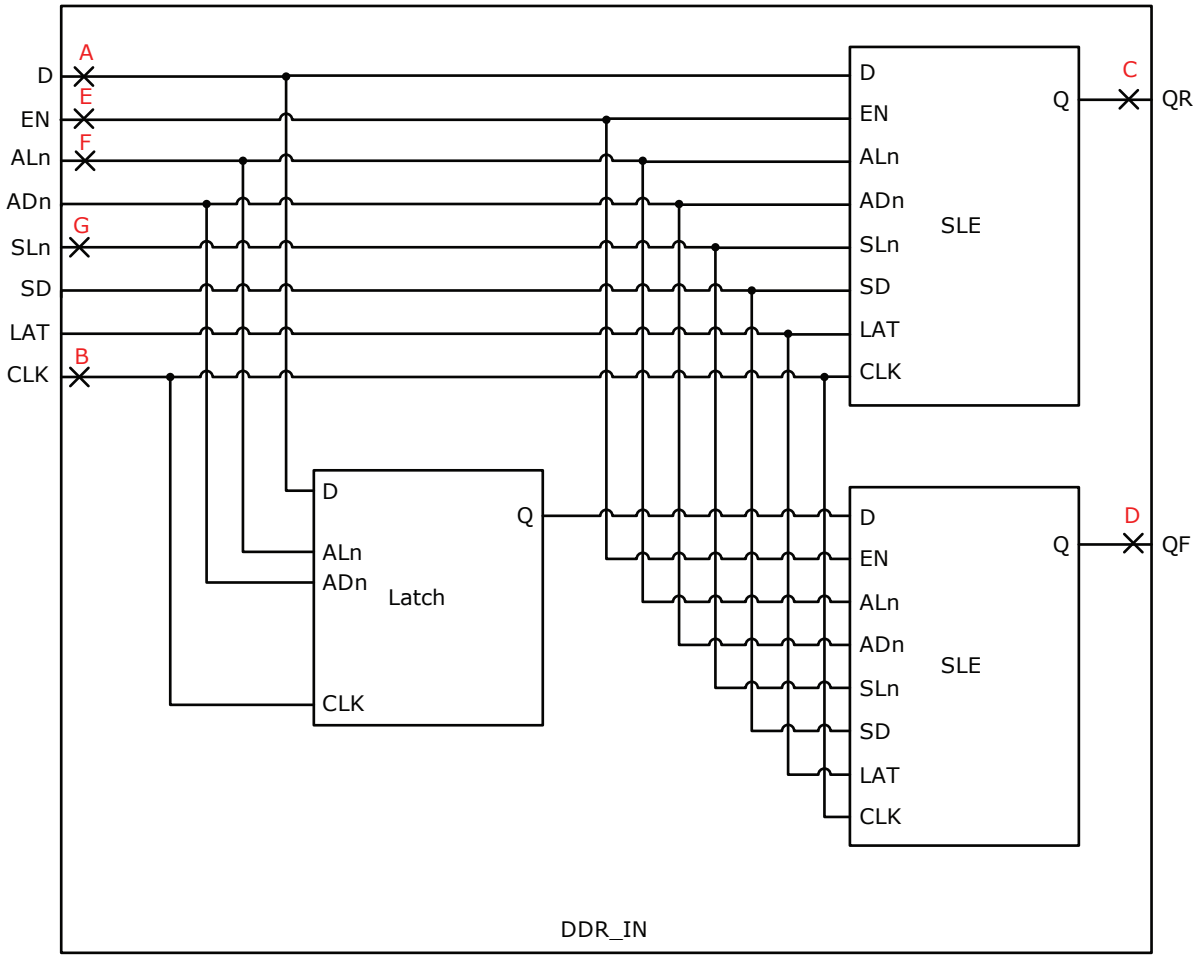


### 3.9.2 INPUT DDR TIMING DIAGRAM


© 2026 Microchip Technology Inc. and its subsidiaries

**FIGURE 3-11: INPUT DDR TIMING DIAGRAM**

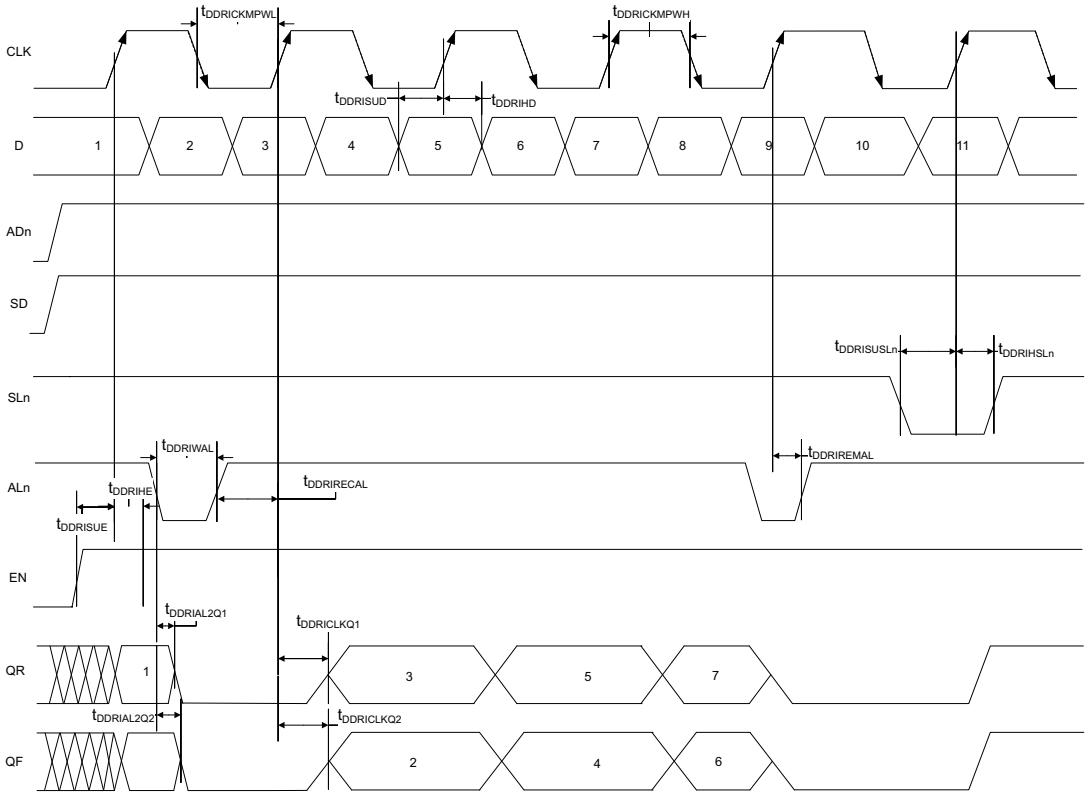


## 3.9.3 TIMING CHARACTERISTICS

The following table lists the input DDR propagation delays in worst commercial-case conditions when $T_J$ = 85 °C, $V_{DD}$ = 1.14V.

**TABLE 3-219: INPUT DDR PROPAGATION DELAYS**

| Symbol | Description | Measuring Nodes (from, to) | –1 | –Std | Unit |
|---|---|---|---|---|---|
| $T_{DDRICLKQ1}$ | Clock-to-Out Out_QR for input DDR | B, C | 0.16 | 0.188 | ns |
| $T_{DDRICLKQ2}$ | Clock-to-Out Out_QF for input DDR | B, D | 0.166 | 0.195 | ns |
| $T_{DDRISUD}$ | Data setup for input DDR | A, B | 0.357 | 0.421 | ns |
| $T_{DDRIHD}$ | Data hold for input DDR | A, B | 0 | 0 | ns |
| $T_{DDRISUE}$ | Enable setup for input DDR | E, B | 0.46 | 0.542 | ns |
| $T_{DDRIHE}$ | Enable hold for input DDR | E, B | 0 | 0 | ns |
| $T_{DDRISUSLN}$ | Synchronous load setup for input DDR | G, B | 0.46 | 0.542 | ns |
| $T_{DDRIHSLN}$ | Synchronous load hold for input DDR | G, B | 0 | 0 | ns |
| $T_{DDRIAL2Q1}$ | Asynchronous load-to-out QR for input DDR | F, C | 0.587 | 0.69 | ns |
| $T_{DDRIAL2Q2}$ | Asynchronous load-to-out QF for input DDR | F, D | 0.541 | 0.636 | ns |
| $T_{DDRIREMAL}$ | Asynchronous load removal time for input DDR | F, B | 0 | 0 | ns |
| $T_{DDRIRECAL}$ | Asynchronous load recovery time for input DDR | F, B | 0.074 | 0.087 | ns |
| $T_{DDRIWAL}$ | Asynchronous load minimum pulse width for input DDR | F, F | 0.304 | 0.357 | ns |
| $T_{DDRICKMPWH}$ | Clock minimum pulse width high for input DDR | B, B | 0.075 | 0.088 | ns |

**TABLE 3-219: INPUT DDR PROPAGATION DELAYS (CONTINUED)**

| Symbol | Description | Measuring Nodes (from, to) | –1 | –Std | Unit |
|---|---|---|---|---|---|
| $T_{DDRICKMPWL}$ | Clock minimum pulse width low for input DDR | B, B | 0.159 | 0.187 | ns |

3.9.4 OUTPUT DDR MODULE

**FIGURE 3-12: OUTPUT DDR MODULE**

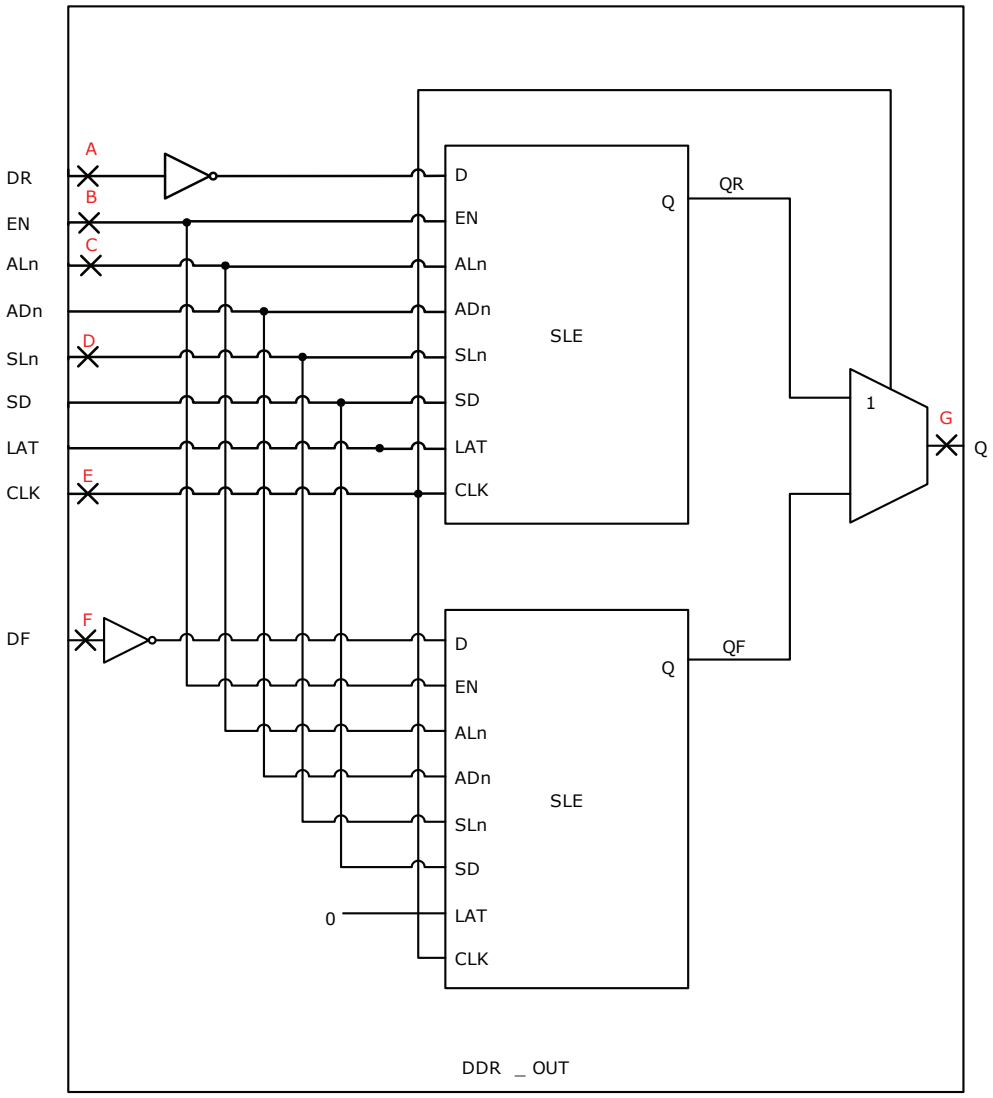



© 2026 Microchip Technology Inc. and its subsidiaries

**FIGURE 3-13: OUTPUT DDR TIMING DIAGRAM**

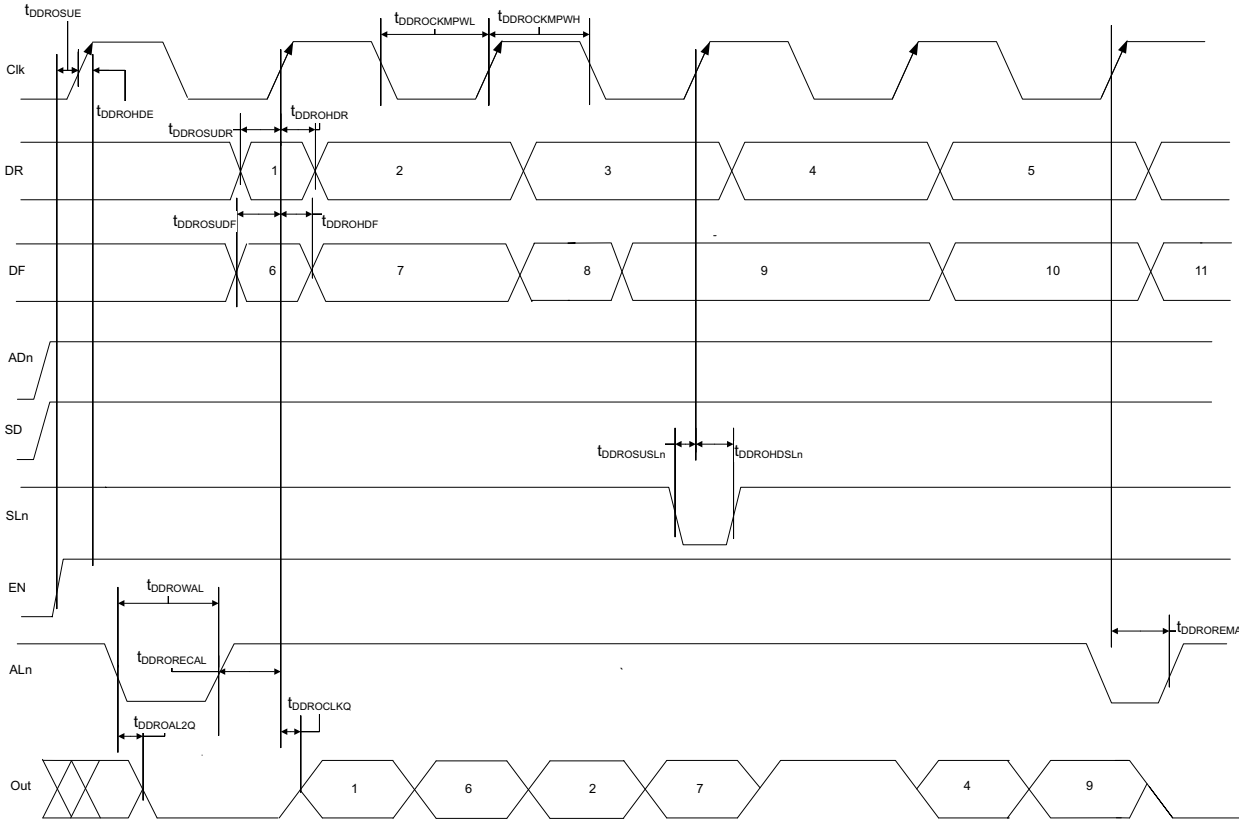


## 3.9.5 TIMING CHARACTERISTICS

The following table lists the output DDR propagation delays in worst commercial-case conditions when $T_J$ = 85 °C, $V_{DD}$ = 1.14V.

**TABLE 3-220: OUTPUT DDR PROPAGATION DELAYS**

| Symbol | Description | Measuring Nodes (from, to) | –1 | –Std | Unit |
|---|---|---|---|---|---|
| $T_{DDROCLKQ}$ | Clock-to-out of DDR for output DDR | E, G | 0.263 | 0.309 | ns |
| $T_{DDROSUDF}$ | Data_F data setup for output DDR | F, E | 0.143 | 0.168 | ns |
| $T_{DDROSUDR}$ | Data_R data setup for output DDR | A, E | 0.19 | 0.223 | ns |
| $T_{DDROHDF}$ | Data_F data hold for output DDR | F, E | 0 | 0 | ns |
| $T_{DDROHDR}$ | Data_R data hold for output DDR | A, E | 0 | 0 | ns |
| $T_{DDROSUE}$ | Enable setup for input DDR | B, E | 0.419 | 0.493 | ns |
| $T_{DDROHE}$ | Enable hold for input DDR | B, E | 0 | 0 | ns |
| $T_{DDROSUSLN}$ | Synchronous load setup for input DDR | D, E | 0.196 | 0.231 | ns |
| $T_{DDROHSLN}$ | Synchronous load hold for input DDR | D, E | 0 | 0 | ns |
| $T_{DDROAL2Q}$ | Asynchronous load-to-out for output DDR | C, G | 0.528 | 0.621 | ns |
| $T_{DDROREMAL}$ | Asynchronous load removal time for output DDR | C, E | 0 | 0 | ns |
| $T_{DDRORECAL}$ | Asynchronous load recovery time for output DDR | C, E | 0.034 | 0.04 | ns |
| $T_{DDROWAL}$ | Asynchronous load minimum pulse width for output DDR | C, C | 0.304 | 0.357 | ns |
| $T_{DDROCKMPWH}$ | Clock minimum pulse width high for the output DDR | E, E | 0.075 | 0.088 | ns |

**TABLE 3-220: OUTPUT DDR PROPAGATION DELAYS (CONTINUED)**

| Symbol | Description | Measuring Nodes (from, to) | –1 | –Std | Unit |
|---|---|---|---|---|---|
| $T_{DDROCKMPWL}$ | Clock minimum pulse width low for the output DDR | E, E | 0.159 | 0.187 | ns |

## 3.10 Logic Element Specifications

### 3.10.1 4-INPUT LUT (LUT-4)

The IGLOO 2 and SmartFusion 2 SoC FPGAs offer a fully permutable 4-input LUT. In this section, timing characteristics are presented for a sample of the library. For more details, see *SmartFusion2 and IGLOO2 Macro Library Guide*.

**FIGURE 3-14: LUT-4**

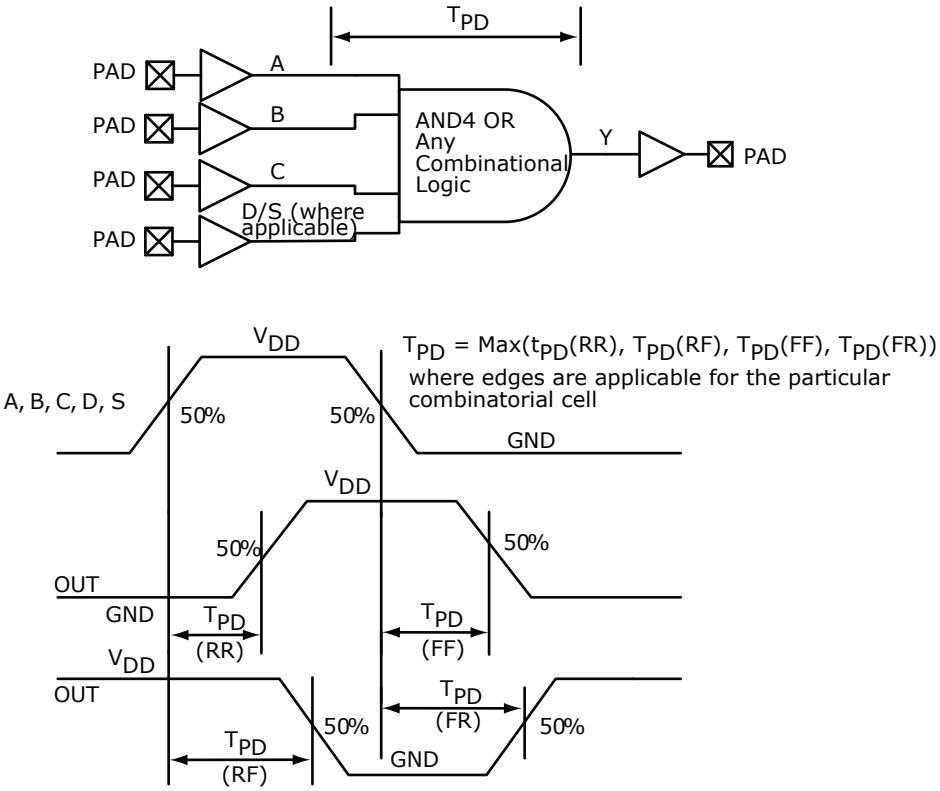


### 3.10.2 TIMING CHARACTERISTICS

The following table lists the combinatorial cell propagation delays in worst commercial-case conditions when $T_J$ = 85 °C, $V_{DD}$ = 1.14V.

**TABLE 3-221: COMBINATORIAL CELL PROPAGATION DELAYS**

| Combinatorial Cell | Equation | Symbol | –1 | –Std | Unit |
|---|---|---|---|---|---|
| INV | Y = !A | $T_{PD}$ | 0.1 | 0.118 | ns |
| AND2 | Y = A · B | $T_{PD}$ | 0.164 | 0.193 | ns |
| NAND2 | Y = !(A · B) | $T_{PD}$ | 0.147 | 0.173 | ns |
| OR2 | Y = A + B | $T_{PD}$ | 0.164 | 0.193 | ns |
| NOR2 | Y = !(A + B) | $T_{PD}$ | 0.147 | 0.173 | ns |
| XOR2 | Y = A ⊕ B | $T_{PD}$ | 0.164 | 0.193 | ns |


© 2026 Microchip Technology Inc. and its subsidiaries

**TABLE 3-221: COMBINATORIAL CELL PROPAGATION DELAYS**

| | | | | | |
|---|---|---|---|---|---|
| XOR3 | Y = A ⊕ B ⊕ C | $T_{PD}$ | 0.225 | 0.265 | ns |
| AND3 | Y = A · B · C | $T_{PD}$ | 0.209 | 0.246 | ns |
| AND4 | Y = A · B · C · D | $T_{PD}$ | 0.287 | 0.338 | ns |

### 3.10.3 SEQUENTIAL MODULE

IGLOO 2 and SmartFusion 2 SoC FPGAs offer a separate flip-flop which can be used independently from the LUT. The flip-flop can be configured as a register or a latch and has a data input and optional enable, synchronous load (clear or preset), and asynchronous load (clear or preset).

**FIGURE 3-15: SEQUENTIAL MODULE**

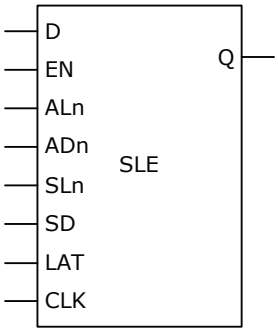


The following figure shows a configuration with SD = 0 (synchronous clear) and ADn = 1 (asynchronous clear) for a flip-flop (LAT = 0).

**FIGURE 3-16: SEQUENTIAL MODULE TIMING DIAGRAM**

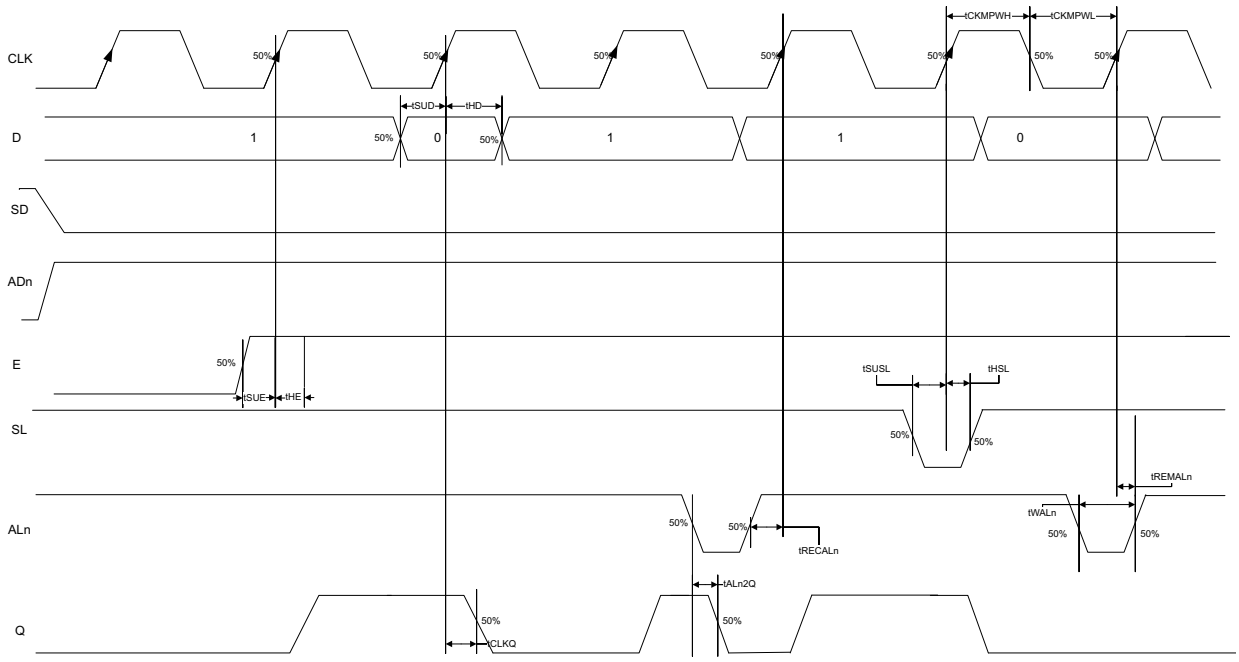

### 3.10.3.1 Timing Characteristics

The following table lists the register delays in worst commercial-case conditions when $T_J$ = 85 °C, $V_{DD}$ = 1.14V.

**TABLE 3-222: REGISTER DELAYS**

| Parameter | Symbol | –1 | –Std | Unit |
|---|---|---|---|---|
| Clock-to-Q of the core register | $T_{CLKQ}$ | 0.108 | 0.127 | ns |
| Data setup time for the core register | $T_{SUD}$ | 0.254 | 0.298 | ns |
| Data hold time for the core register | $T_{HD}$ | 0 | 0 | ns |
| Enable setup time for the core register | $T_{SUE}$ | 0.335 | 0.394 | ns |
| Enable hold time for the core register | $T_{HE}$ | 0 | 0 | ns |
| Synchronous load setup time for the core register | $T_{SUSL}$ | 0.335 | 0.394 | ns |
| Synchronous load hold time for the core register | $T_{HSL}$ | 0 | 0 | ns |
| Asynchronous Clear-to-Q of the core register (ADn = 1) | $T_{ALN2Q}$ | 0.473 | 0.556 | ns |
| Asynchronous preset-to-Q of the core register (ADn = 0) | | 0.451 | 0.531 | ns |
| Asynchronous load removal time for the core register | $T_{REMALN}$ | 0 | 0 | ns |
| Asynchronous load recovery time for the core register | $T_{RECALN}$ | 0.353 | 0.415 | ns |
| Asynchronous load minimum pulse width for the core register | $T_{WALN}$ | 0.266 | 0.313 | ns |
| Clock minimum pulse width high for the core register | $T_{CKMPWH}$ | 0.065 | 0.077 | ns |
| Clock minimum pulse width low for the core register | $T_{CKMPWL}$ | 0.139 | 0.164 | ns |

## 3.11 Global Resource Characteristics

The IGLOO 2 and SmartFusion 2 SoC FPGA devices offer a powerful, low skew global routing network which provides an effective clock distribution throughout the FPGA fabric. See *UG0445: IGLOO2 FPGA and SmartFusion2 SoC FPGA Fabric User Guide* for the positions of various global routing resources.

The following table lists the 150 device global resources in worst commercial-case conditions when $T_J$ = 85 °C, $V_{DD}$ = 1.14V.

**TABLE 3-223: 150 DEVICE GLOBAL RESOURCE**

| Parameter | Symbol | –1 | | –Std | | Unit |
|---|---|---|---|---|---|---|
| | | Min. | Max. | Min. | Max. | |
| Input low delay for global clock | $T_{RCKL}$ | 0.83 | 0.911 | 0.831 | 0.913 | ns |
| Input high delay for global clock | $T_{RCKH}$ | 1.457 | 1.588 | 1.715 | 1.869 | ns |
| Maximum skew for global clock | $T_{RCKSW}$ | — | 0.131 | — | 0.154 | ns |

The following table lists the 090 device global resources in worst commercial-case conditions when $T_J$ = 85 °C, $V_{DD}$ = 1.14 V.

**TABLE 3-224: 090 DEVICE GLOBAL RESOURCE**

| Parameter | Symbol | –1 | | –Std | | Unit |
|---|---|---|---|---|---|---|
| | | Min. | Max. | Min. | Max. | |
| Input low delay for global clock | $T_{RCKL}$ | 0.835 | 0.888 | 0.833 | 0.886 | ns |
| Input high delay for global clock | $T_{RCKH}$ | 1.405 | 1.489 | 1.654 | 1.752 | ns |
| Maximum skew for global clock | $T_{RCKSW}$ | — | 0.084 | — | 0.098 | ns |

The following table lists the 050 device global resources in worst commercial-case conditions when $T_J$ = 85 °C, $V_{DD}$ = 1.14V.


© 2026 Microchip Technology Inc. and its subsidiaries

.

**TABLE 3-225: 050 DEVICE GLOBAL RESOURCE**

| Parameter | Symbol | –1 | | –Std | | Unit |
|---|---|---|---|---|---|---|
| | | Min. | Max. | Min. | Max. | |
| Input low delay for global clock | $T_{RCKL}$ | 0.827 | 0.897 | 0.826 | 0.896 | ns |
| Input high delay for global clock | $T_{RCKH}$ | 1.419 | 1.53 | 1.671 | 1.8 | ns |
| Maximum skew for global clock | $T_{RCKSW}$ | — | 0.111 | — | 0.129 | ns |

The following table lists the 025 device global resources in worst commercial-case conditions when $T_J$ = 85 °C, $V_{DD}$ = 1.14V.

**TABLE 3-226: 025 DEVICE GLOBAL RESOURCE**

| Parameter | Symbol | –1 | | –Std | | Unit |
|---|---|---|---|---|---|---|
| | | Min. | Max. | Min. | Max. | |
| Input low delay for global clock | $T_{RCKL}$ | 0.747 | 0.799 | 0.745 | 0.797 | ns |
| Input high delay for global clock | $T_{RCKH}$ | 1.294 | 1.378 | 1.522 | 1.621 | ns |
| Maximum skew for global clock | $T_{RCKSW}$ | — | 0.084 | — | 0.099 | ns |

The following table lists the 010 device global resources in worst commercial-case conditions when $T_J$ = 85 °C, $V_{DD}$ = 1.14V.

**TABLE 3-227: 010 DEVICE GLOBAL RESOURCE**

| Parameter | Symbol | –1 | | –Std | | Unit |
|---|---|---|---|---|---|---|
| | | Min. | Max. | Min. | Max. | |
| Input low delay for global clock | $T_{RCKL}$ | 0.626 | 0.669 | 0.627 | 0.668 | ns |
| Input high delay for global clock | $T_{RCKH}$ | 1.112 | 1.182 | 1.308 | 1.393 | ns |
| Maximum skew for global clock | $T_{RCKSW}$ | — | 0.07 | — | 0.085 | ns |

The following table lists the 005 device global resources in worst commercial-case conditions when $T_J$ = 85 °C, $V_{DD}$ = 1.14V.

**TABLE 3-228: 005 DEVICE GLOBAL RESOURCE**

| Parameter | Symbol | –1 | | –Std | | Unit |
|---|---|---|---|---|---|---|
| | | Min. | Max | Min. | Max. | |
| Input low delay for global clock | $T_{RCKL}$ | 0.625 | 0.66 | 0.628 | 0.66 | ns |
| Input high delay for global clock | $T_{RCKH}$ | 1.126 | 1.187 | 1.325 | 1.397 | ns |
| Maximum skew for global clock | $T_{RCKSW}$ | — | 0.061 | — | 0.072 | ns |

## 3.12 FPGA Fabric SRAM

See *UG0445: IGLOO2 FPGA and SmartFusion2 SoC FPGA Fabric User Guide* for more information.

### 3.12.1 FPGA FABRIC LARGE SRAM (LSRAM)

The following table lists the RAM1K18—dual-port mode for depth × width configuration 1K × 18 in worst commercial-case conditions when $T_J$ = 85 °C, $V_{DD}$ = 1.14V.

**TABLE 3-229: RAM1K18—DUAL-PORT MODE FOR DEPTH × WIDTH CONFIGURATION 1K × 18**

| Parameter | Symbol | –1 | | –Std | | Unit |
|---|---|---|---|---|---|---|
| | | Min. | Max. | Min. | Max. | |
| Clock period | $T_{CY}$ | 2.5 | — | 2.941 | — | ns |
| Clock minimum pulse width high | $T_{CLKMPWH}$ | 1.125 | — | 1.323 | — | ns |
| Clock minimum pulse width low | $T_{CLKMPWL}$ | 1.125 | — | 1.323 | — | ns |
| Pipelined clock period | $T_{PLCY}$ | 2.5 | — | 2.941 | — | ns |
| Pipelined clock minimum pulse width high | $T_{PLCLKMPWH}$ | 1.125 | — | 1.323 | — | ns |
| Pipelined clock minimum pulse width low | $T_{PLCLKMPWL}$ | 1.125 | — | 1.323 | — | ns |
| Read access time with pipeline register | $T_{CLK2Q}$ | — | 0.334 | — | 0.393 | ns |
| Read access time without pipeline register | | — | 2.273 | — | 2.674 | ns |
| Access time with feed-through write timing | | — | 2.273 | — | 2.674 | ns |
| Address setup time | $T_{ADDRSU}$ | 0.441 | — | 0.519 | — | ns |
| Address hold time | $T_{ADDRHD}$ | 0.274 | — | 0.322 | — | ns |
| Data setup time | $T_{DSU}$ | 0.341 | — | 0.401 | — | ns |
| Data hold time | $T_{DHD}$ | 0.107 | — | 0.126 | — | ns |
| Block select setup time | $T_{BLKSU}$ | 0.207 | — | 0.244 | — | ns |
| Block select hold time | $T_{BLKHD}$ | 0.216 | | 0.254 | | ns |
| Block select to out disable time (when pipelined register is disabled) | $T_{BLK2Q}$ | — | 1.529 | | 1.799 | ns |
| Block select minimum pulse width | $T_{BLKMPW}$ | 0.186 | — | 0.219 | — | ns |
| Read enable setup time | $T_{RDESU}$ | 0.449 | — | 0.528 | — | ns |
| Read enable hold time | $T_{RDEHD}$ | 0.167 | — | 0.197 | — | ns |
| Pipelined read enable setup time (A_DOUT_EN, B_DOUT_EN) | $T_{RDPLESU}$ | 0.248 | — | 0.291 | — | ns |
| Pipelined read enable hold time (A_DOUT_EN, B_DOUT_EN) | $T_{RDPLEHD}$ | 0.102 | — | 0.12 | | ns |
| Asynchronous reset to output propagation delay | $T_{R2Q}$ | — | 1.506 | – | 1.772 | ns |
| Asynchronous reset removal time | $T_{RSTREM}$ | 0.506 | — | 0.595 | — | ns |
| Asynchronous reset recovery time | $T_{RSTREC}$ | 0.004 | — | 0.005 | — | ns |
| Asynchronous reset minimum pulse width | $T_{RSTMPW}$ | 0.301 | — | 0.354 | — | ns |
| Pipelined register asynchronous reset removal time | $T_{PLRSTREM}$ | –0.279 | — | – 0.328 | — | ns |
| Pipelined register asynchronous reset recovery time | $T_{PLRSTREC}$ | 0.327 | — | 0.385 | — | ns |
| Pipelined register asynchronous reset minimum pulse width | $T_{PLRSTMPW}$ | 0.282 | — | 0.332 | — | ns |
| Synchronous reset setup time | $T_{SRSTSU}$ | 0.226 | — | 0.265 | — | ns |
| Synchronous reset hold time | $T_{SRSTHD}$ | 0.036 | — | 0.043 | — | ns |
| Write enable setup time | $T_{WESU}$ | 0.39 | — | 0.458 | — | ns |
| Write enable hold time | $T_{WEHD}$ | 0.242 | — | 0.285 | — | ns |
| Maximum frequency | $F_{MAX}$ | — | 400 | — | 340 | MHz |


© 2026 Microchip Technology Inc. and its subsidiaries

The following table lists the RAM1K18 – dual-port mode for depth × width configuration 2K × 9 in worst commercial-case conditions when $T_J$ = 85 °C, $V_{DD}$ = 1.14V.

**TABLE 3-230: RAM1K18—DUAL-PORT MODE FOR DEPTH × WIDTH CONFIGURATION 2K × 9**

| Parameter | Symbol | –1 | | –Std | | Unit |
|---|---|---|---|---|---|---|
| | | Min. | Max. | Min. | Max. | |
| Clock period | $T_{CY}$ | 2.5 | — | 2.941 | — | ns |
| Clock minimum pulse width high | $T_{CLKMPWH}$ | 1.125 | — | 1.323 | — | ns |
| Clock minimum pulse width low | $T_{CLKMPWL}$ | 1.125 | — | 1.323 | — | ns |
| Pipelined clock period | $T_{PLCY}$ | 2.5 | — | 2.941 | — | ns |
| Pipelined clock minimum pulse width high | $T_{PLCLKMPWH}$ | 1.125 | — | 1.323 | — | ns |
| Pipelined clock minimum pulse width low | $T_{PLCLKMPWL}$ | 1.125 | — | 1.323 | — | ns |
| Read access time with pipeline register | $T_{CLK2Q}$ | — | 0.334 | — | 0.393 | ns |
| Read access time without pipeline register | | — | 2.273 | — | 2.674 | ns |
| Access time with feed-through write timing | | — | 2.273 | — | 2.674 | ns |
| Address setup time | $T_{ADDRSU}$ | 0.475 | — | 0.559 | — | ns |
| Address hold time | $T_{ADDRHD}$ | 0.274 | — | 0.322 | — | ns |
| Data setup time | $T_{DSU}$ | 0.336 | — | 0.395 | — | ns |
| Data hold time | $T_{DHD}$ | 0.082 | — | 0.096 | — | ns |
| Block select setup time | $T_{BLKSU}$ | 0.207 | — | 0.244 | — | ns |
| Block select hold time | $T_{BLKHD}$ | 0.216 | | 0.254 | — | ns |
| Block select to out disable time (when pipelined register is disabled) | $T_{BLK2Q}$ | — | 1.529 | — | 1.799 | ns |
| Block select minimum pulse width | $T_{BLKMPW}$ | 0.186 | — | 0.219 | — | ns |
| Read enable setup time | $T_{RDESU}$ | 0.485 | — | 0.57 | — | ns |
| Read enable hold time | $T_{RDEHD}$ | 0.071 | — | 0.083 | — | ns |
| Pipelined read enable setup time (A_DOUT_EN, B_DOUT_EN) | $T_{RDPLESU}$ | 0.248 | — | 0.291 | — | ns |
| Pipelined read enable hold time (A_DOUT_EN, B_DOUT_EN) | $T_{RDPLEHD}$ | 0.102 | — | 0.12 | — | ns |
| Asynchronous reset to output propagation delay | $T_{R2Q}$ | — | 1.514 | — | 1.781 | ns |
| Asynchronous reset removal time | $T_{RSTREM}$ | 0.506 | — | 0.595 | — | ns |
| Asynchronous reset recovery time | $T_{RSTREC}$ | 0.004 | — | 0.005 | — | ns |
| Asynchronous reset minimum pulse width | $T_{RSTMPW}$ | 0.301 | — | 0.354 | — | ns |
| Pipelined register asynchronous reset removal time | $T_{PLRSTREM}$ | –0.279 | — | –0.328 | — | ns |
| Pipelined register asynchronous reset recovery time | $T_{PLRSTREC}$ | 0.327 | — | 0.385 | — | ns |
| Pipelined register asynchronous reset minimum pulse width | $T_{PLRSTMPW}$ | 0.282 | — | 0.332 | — | ns |
| Synchronous reset setup time | $T_{SRSTSU}$ | 0.226 | — | 0.265 | — | ns |
| Synchronous reset hold time | $T_{SRSTHD}$ | 0.036 | — | 0.043 | — | ns |
| Write enable setup time | $T_{WESU}$ | 0.415 | — | 0.488 | — | ns |
| Write enable hold time | $T_{WEHD}$ | 0.048 | — | 0.057 | — | ns |
| Maximum frequency | $F_{MAX}$ | — | 400 | — | 340 | MHz |

The following table lists the RAM1K18—dual-port mode for depth × width configuration 4K × 4 in worst commercial-case conditions when $T_J$ = 85 °C, $V_{DD}$ = 1.14V.

**TABLE 3-231: RAM1K18—DUAL-PORT MODE FOR DEPTH × WIDTH CONFIGURATION 4K × 4**

| Parameter | Symbol | –1 | | –Std | | Unit |
|---|---|---|---|---|---|---|
| | | Min. | Max. | Min. | Max. | |
| Clock period | $T_{CY}$ | 2.5 | — | 2.941 | — | ns |
| Clock minimum pulse width high | $T_{CLKMPWH}$ | 1.125 | — | 1.323 | — | ns |
| Clock minimum pulse width low | $T_{CLKMPWL}$ | 1.125 | — | 1.323 | — | ns |
| Pipelined clock period | $T_{PLCY}$ | 2.5 | — | 2.941 | — | ns |
| Pipelined clock minimum pulse width high | $T_{PLCLKMPWH}$ | 1.125 | — | 1.323 | — | ns |
| Pipelined clock minimum pulse width low | $T_{PLCLKMPWL}$ | 1.125 | — | 1.323 | — | ns |
| Read access time with pipeline register | $T_{CLK2Q}$ | — | 0.323 | | 0.38 | ns |
| Read access time without pipeline register | | — | 2.273 | | 2.673 | ns |
| Access time with feed-through write timing | | — | 2.273 | | 2.673 | ns |
| Address setup time | $T_{ADDRSU}$ | 0.543 | — | 0.638 | — | ns |
| Address hold time | $T_{ADDRHD}$ | 0.274 | — | 0.322 | — | ns |
| Data setup time | $T_{DSU}$ | 0.334 | — | 0.393 | — | ns |
| Data hold time | $T_{DHD}$ | 0.082 | — | 0.096 | — | ns |
| Block select setup time | $T_{BLKSU}$ | 0.207 | — | 0.244 | — | ns |
| Block select hold time | $T_{BLKHD}$ | 0.216 | — | 0.254 | — | ns |
| Block select to out disable time (when pipelined register is disabled) | $T_{BLK2Q}$ | — | 1.511 | — | 1.778 | ns |
| Block select minimum pulse width | $T_{BLKMPW}$ | 0.186 | — | 0.219 | — | ns |
| Read enable setup time | $T_{RDESU}$ | 0.516 | — | 0.607 | — | ns |
| Read enable hold time | $T_{RDEHD}$ | 0.071 | — | 0.083 | — | ns |
| Pipelined read enable setup time (A_DOUT_EN, B_DOUT_EN) | $T_{RDPLESU}$ | 0.248 | — | 0.291 | — | ns |
| Pipelined read enable hold time (A_DOUT_EN, B_DOUT_EN) | $T_{RDPLEHD}$ | 0.102 | — | 0.12 | — | ns |
| Asynchronous reset to output propagation delay | $T_{R2Q}$ | — | 1.507 | | 1.773 | ns |
| Asynchronous reset removal time | $T_{RSTREM}$ | 0.506 | — | 0.595 | — | ns |
| Asynchronous reset recovery time | $T_{RSTREC}$ | 0.004 | — | 0.005 | — | ns |
| Asynchronous reset minimum pulse width | $T_{RSTMPW}$ | 0.301 | — | 0.354 | — | ns |
| Pipelined register asynchronous reset removal time | $T_{PLRSTREM}$ | –0.279 | — | –0.328 | — | ns |
| Pipelined register asynchronous reset recovery time | $T_{PLRSTREC}$ | 0.327 | — | 0.385 | — | ns |
| Pipelined register asynchronous reset minimum pulse width | $T_{PLRSTMPW}$ | 0.282 | — | 0.332 | — | ns |
| Synchronous reset setup time | $T_{SRSTSU}$ | 0.226 | — | 0.265 | — | ns |
| Synchronous reset hold time | $T_{SRSTHD}$ | 0.036 | — | 0.043 | — | ns |
| Write enable setup time | $T_{WESU}$ | 0.458 | — | 0.539 | — | ns |
| Write enable hold time | $T_{WEHD}$ | 0.048 | — | 0.057 | — | ns |
| Maximum frequency | $F_{MAX}$ | — | 400 | — | 340 | MHz |


© 2026 Microchip Technology Inc. and its subsidiaries

The following table lists the RAM1K18—dual-port mode for depth × width configuration 8K × 2 in worst commercial-case conditions when $T_J$ = 85 °C, $V_{DD}$ = 1.14V.

**TABLE 3-232: RAM1K18—DUAL-PORT MODE FOR DEPTH × WIDTH CONFIGURATION 8K × 2**

| Parameter | Symbol | –1 | | –Std | | Unit |
|---|---|---|---|---|---|---|
| | | Min. | Max. | Min. | Max. | |
| Clock period | $T_{CY}$ | 2.5 | — | 2.941 | — | ns |
| Clock minimum pulse width high | $T_{CLKMPWH}$ | 1.125 | — | 1.323 | — | ns |
| Clock minimum pulse width low | $T_{CLKMPWL}$ | 1.125 | — | 1.323 | — | ns |
| Pipelined clock period | $T_{PLCY}$ | 2.5 | — | 2.941 | — | ns |
| Pipelined clock minimum pulse width high | $T_{PLCLKMPWH}$ | 1.125 | — | 1.323 | — | ns |
| Pipelined clock minimum pulse width low | $T_{PLCLKMPWL}$ | 1.125 | — | 1.323 | — | ns |
| Read access time with pipeline register | $T_{CLK2Q}$ | — | 0.32 | — | 0.377 | ns |
| Read access time without pipeline register | | — | 2.272 | — | 2.673 | ns |
| Access time with feed-through write timing | | — | 2.272 | — | 2.673 | ns |
| Address setup time | $T_{ADDRSU}$ | 0.612 | — | 0.72 | — | ns |
| Address hold time | $T_{ADDRHD}$ | 0.274 | — | 0.322 | — | ns |
| Data setup time | $T_{DSU}$ | 0.33 | — | 0.388 | — | ns |
| Data hold time | $T_{DHD}$ | 0.082 | — | 0.096 | — | ns |
| Block select setup time | $T_{BLKSU}$ | 0.207 | — | 0.244 | — | ns |
| Block select hold time | $T_{BLKHD}$ | 0.216 | | 0.254 | — | ns |
| Block select to out disable time (when pipelined register is disabled) | $T_{BLK2Q}$ | | 1.511 | | 1.778 | ns |
| Block select minimum pulse width | $T_{BLKMPW}$ | 0.186 | — | 0.219 | — | ns |
| Read enable setup time | $T_{RDESU}$ | 0.529 | — | 0.622 | — | ns |
| Read enable hold time | $T_{RDEHD}$ | 0.071 | — | 0.083 | — | ns |
| Pipelined read enable setup time (A_DOUT_EN, B_DOUT_EN) | $T_{RDPLESU}$ | 0.248 | — | 0.291 | — | ns |
| Pipelined read enable hold time (A_DOUT_EN, B_DOUT_EN) | $T_{RDPLEHD}$ | 0.102 | — | 0.12 | — | ns |
| Asynchronous reset to output propagation delay | $T_{R2Q}$ | — | 1.528 | — | 1.797 | ns |
| Asynchronous reset removal time | $T_{RSTREM}$ | 0.506 | — | 0.595 | — | ns |
| Asynchronous reset recovery time | $T_{RSTREC}$ | 0.004 | — | 0.005 | — | ns |
| Asynchronous reset minimum pulse width | $T_{RSTMPW}$ | 0.301 | — | 0.354 | — | ns |
| Pipelined register asynchronous reset removal time | $T_{PLRSTREM}$ | –0.279 | — | –0.328 | — | ns |
| Pipelined register asynchronous reset recovery time | $T_{PLRSTREC}$ | 0.327 | — | 0.385 | — | ns |
| Pipelined register asynchronous reset minimum pulse width | $T_{PLRSTMPW}$ | 0.282 | — | 0.332 | — | ns |
| Synchronous reset setup time | $T_{SRSTSU}$ | 0.226 | — | 0.265 | — | ns |
| Synchronous reset hold time | $T_{SRSTHD}$ | 0.036 | — | 0.043 | — | ns |
| Write enable setup time | $T_{WESU}$ | 0.488 | — | 0.574 | — | ns |
| Write enable hold time | $T_{WEHD}$ | 0.048 | — | 0.057 | — | ns |
| Maximum frequency | $F_{MAX}$ | — | 400 | — | 340 | MHz |

The following table lists the RAM1K18—dual-port mode for depth × width configuration 16K × 1 in worst commercial-case conditions when $T_J$ = 85 °C, $V_{DD}$ = 1.14 V.

**TABLE 3-233: RAM1K18—DUAL-PORT MODE FOR DEPTH × WIDTH CONFIGURATION 16K × 1**

| Parameter | Symbol | –1 | | –Std | | Unit |
|---|---|---|---|---|---|---|
| | | Min. | Max. | Min. | Max. | |
| Clock period | $T_{CY}$ | 2.5 | — | 2.941 | — | ns |
| Clock minimum pulse width high | $T_{CLKMPWH}$ | 1.125 | — | 1.323 | — | ns |
| Clock minimum pulse width low | $T_{CLKMPWL}$ | 1.125 | — | 1.323 | — | ns |
| Pipelined clock period | $T_{PLCY}$ | 2.5 | — | 2.941 | — | ns |
| Pipelined clock minimum pulse width high | $T_{PLCLK-MPWH}$ | 1.125 | — | 1.323 | — | ns |
| Pipelined clock minimum pulse width low | $T_{PLCLK-MPWL}$ | 1.125 | — | 1.323 | — | ns |
| Read access time with pipeline register | $T_{CLK2Q}$ | — | 0.32 | — | 0.377 | ns |
| Read access time without pipeline register | | — | 2.269 | — | 2.669 | ns |
| Access time with feed-through write timing | | — | 2.269 | — | 2.669 | ns |
| Address setup time | $T_{ADDRSU}$ | 0.626 | — | 0.737 | — | ns |
| Address hold time | $T_{ADDRHD}$ | 0.274 | — | 0.322 | — | ns |
| Data setup time | $T_{DSU}$ | 0.322 | — | 0.378 | — | ns |
| Data hold time | $T_{DHD}$ | 0.082 | — | 0.096 | — | ns |
| Block select setup time | $T_{BLKSU}$ | 0.207 | — | 0.244 | — | ns |
| Block select hold time | $T_{BLKHD}$ | 0.216 | — | 0.254 | — | ns |
| Block select to out disable time (when pipelined register is disabled) | $T_{BLK2Q}$ | | 1.51 | | 1.777 | ns |
| Block select minimum pulse width | $T_{BLKMPW}$ | 0.186 | — | 0.219 | — | ns |
| Read enable setup time | $T_{RDESU}$ | 0.53 | — | 0.624 | — | ns |
| Read enable hold time | $T_{RDEHD}$ | 0.071 | — | 0.083 | — | ns |
| Pipelined read enable setup time (A_DOUT_EN, B_DOUT_EN) | $T_{RDPLESU}$ | 0.248 | — | 0.291 | — | ns |
| Pipelined read enable hold time (A_DOUT_EN, B_DOUT_EN) | $T_{RDPLEHD}$ | 0.102 | — | 0.12 | — | ns |
| Asynchronous reset to output propagation delay | $T_{R2Q}$ | | 1.547 | | 1.82 | ns |
| Asynchronous reset removal time | $T_{RSTREM}$ | 0.506 | — | 0.595 | | ns |
| Asynchronous reset recovery time | $T_{RSTREC}$ | 0.004 | — | 0.005 | | ns |
| Asynchronous reset minimum pulse width | $T_{RSTMPW}$ | 0.301 | — | 0.354 | | ns |
| Pipelined register asynchronous reset removal time | $T_{PLRSTREM}$ | –0.279 | — | –0.328 | | ns |
| Pipelined register asynchronous reset recovery time | $T_{PLRSTREC}$ | 0.327 | — | 0.385 | | ns |
| Pipelined register asynchronous reset minimum pulse width | $T_{PLRSTMPW}$ | 0.282 | — | 0.332 | — | ns |
| Synchronous reset setup time | $T_{SRSTSU}$ | 0.226 | — | 0.265 | — | ns |
| Synchronous reset hold time | $T_{SRSTHD}$ | 0.036 | — | 0.043 | — | ns |
| Write enable setup time | $T_{WESU}$ | 0.454 | — | 0.534 | — | ns |
| Write enable hold time | $T_{WEHD}$ | 0.048 | — | 0.057 | — | ns |
| Maximum frequency | $F_{MAX}$ | — | 400 | — | 340 | MHz |


© 2026 Microchip Technology Inc. and its subsidiaries

The following table lists the RAM1K18—two-port mode for depth × width configuration 512 × 36 in worst commercial-case conditions when $T_J$ = 85 °C, $V_{DD}$ = 1.14V.

**TABLE 3-234: RAM1K18—TWO-PORT MODE FOR DEPTH × WIDTH CONFIGURATION 512 × 36**

| Parameter | Symbol | –1 | | –Std | | Unit |
|---|---|---|---|---|---|---|
| | | Min. | Max. | Min. | Max. | |
| Clock period | $T_{CY}$ | 2.5 | — | 2.941 | — | ns |
| Clock minimum pulse width high | $T_{CLKMPWH}$ | 1.125 | — | 1.323 | — | ns |
| Clock minimum pulse width low | $T_{CLKMPWL}$ | 1.125 | — | 1.323 | — | ns |
| Pipelined clock period | $T_{PLCY}$ | 2.5 | — | 2.941 | — | ns |
| Pipelined clock minimum pulse width high | $T_{PLCLK-MPWH}$ | 1.125 | — | 1.323 | — | ns |
| Pipelined clock minimum pulse width low | $T_{PLCLK-MPWL}$ | 1.125 | — | 1.323 | — | ns |
| Read access time with pipeline register | $T_{CLK2Q}$ | — | 0.334 | | 0.393 | ns |
| Read access time without pipeline register | | — | 2.25 | | 2.647 | ns |
| Address setup time | $T_{ADDRSU}$ | 0.313 | — | 0.368 | — | ns |
| Address hold time | $T_{ADDRHD}$ | 0.274 | — | 0.322 | — | ns |
| Data setup time | $T_{DSU}$ | 0.337 | — | 0.396 | — | ns |
| Data hold time | $T_{DHD}$ | 0.111 | — | 0.13 | — | ns |
| Block select setup time | $T_{BLKSU}$ | 0.207 | — | 0.244 | — | ns |
| Block select hold time | $T_{BLKHD}$ | 0.201 | — | 0.237 | — | ns |
| Block select to out disable time (when pipelined register is disabled) | $T_{BLK2Q}$ | — | 2.25 | — | 2.647 | ns |
| Block select minimum pulse width | $T_{BLKMPW}$ | 0.186 | — | 0.219 | — | ns |
| Read enable setup time | $T_{RDESU}$ | 0.449 | — | 0.528 | — | ns |
| Read enable hold time | $T_{RDEHD}$ | 0.167 | — | 0.197 | — | ns |
| Pipelined read enable setup time (A_DOUT_EN, B_DOUT_EN) | $T_{RDPLESU}$ | 0.248 | — | 0.291 | — | ns |
| Pipelined read enable hold time (A_DOUT_EN, B_DOUT_EN) | $T_{RDPLEHD}$ | 0.102 | — | 0.12 | — | ns |
| Asynchronous reset to output propagation delay | $T_{R2Q}$ | — | 1.506 | — | 1.772 | ns |
| Asynchronous reset removal time | $T_{RSTREM}$ | 0.506 | — | 0.595 | — | ns |
| Asynchronous reset recovery time | $T_{RSTREC}$ | 0.004 | — | 0.005 | — | ns |
| Asynchronous reset minimum pulse width | $T_{RSTMPW}$ | 0.301 | — | 0.354 | — | ns |
| Pipelined register asynchronous reset removal time | $T_{PLRSTREM}$ | –0.279 | — | –0.328 | | ns |
| Pipelined register asynchronous reset recovery time | $T_{PLRSTREC}$ | 0.327 | — | 0.385 | — | ns |
| Pipelined register asynchronous reset minimum pulse width | $T_{PLRSTMPW}$ | 0.282 | — | 0.332 | — | ns |
| Synchronous reset setup time | $T_{SRSTSU}$ | 0.226 | — | 0.265 | — | ns |
| Synchronous reset hold time | $T_{SRSTHD}$ | 0.036 | — | 0.043 | — | ns |
| Write enable setup time | $T_{WESU}$ | 0.39 | — | 0.458 | — | ns |
| Write enable hold time | $T_{WEHD}$ | 0.242 | — | 0.285 | — | ns |
| Maximum frequency | $F_{MAX}$ | — | 400 | — | 340 | MHz |

### 3.12.2 FPGA FABRIC MICRO SRAM (MSRAM)

The following table lists the µSRAM in 64 × 18 mode in worst commercial-case conditions when $T_J$ = 85 °C, $V_{DD}$ = 1.14V.

**TABLE 3-235: MSRAM (RAM64X18) IN 64 × 18 MODE**

| Parameter | Symbol | –1 | | –Std | | Unit |
|---|---|---|---|---|---|---|
| | | Min. | Max. | Min. | Max. | |
| Read clock period | $T_{CY}$ | 4 | — | 4 | — | ns |
| Read clock minimum pulse width high | $T_{CLKMPWH}$ | 1.8 | — | 1.8 | — | ns |
| Read clock minimum pulse width low | $T_{CLKMPWL}$ | 1.8 | — | 1.8 | — | ns |
| Read pipeline clock period | $T_{PLCY}$ | 4 | — | 4 | — | ns |
| Read pipeline clock minimum pulse width high | $T_{PLCLKMPWH}$ | 1.8 | — | 1.8 | — | ns |
| Read pipeline clock minimum pulse width low | $T_{PLCLKMPWL}$ | 1.8 | — | 1.8 | — | ns |
| Read access time with pipeline register | $T_{CLK2Q}$ | | 0.266 | | 0.313 | ns |
| Read access time without pipeline register | | | 1.677 | | 1.973 | ns |
| Read address setup time in synchronous mode | $T_{ADDRSU}$ | 0.301 | — | 0.354 | — | ns |
| Read address setup time in asynchronous mode | | 1.856 | — | 2.184 | — | ns |
| Read address hold time in synchronous mode | $T_{ADDRHD}$ | 0.091 | — | 0.107 | — | ns |
| Read address hold time in asynchronous mode | | –0.778 | — | –0.915 | — | ns |
| Read enable setup time | $T_{RDENSU}$ | 0.278 | — | 0.327 | — | ns |
| Read enable hold time | $T_{RDENHD}$ | 0.057 | — | 0.067 | — | ns |
| Read block select setup time | $T_{BLKSU}$ | 1.839 | — | 2.163 | — | ns |
| Read block select hold time | $T_{BLKHD}$ | –0.65 | — | –0.765 | — | ns |
| Read block select to out disable time (when pipelined register is disabled) | $T_{BLK2Q}$ | — | 2.036 | — | 2.396 | ns |
| Read asynchronous reset removal time (pipelined clock) | $T_{RSTREM}$ | –0.023 | — | –0.027 | — | ns |
| Read asynchronous reset removal time (non-pipelined clock) | | 0.046 | — | 0.054 | — | ns |
| Read asynchronous reset recovery time (pipelined clock) | $T_{RSTREC}$ | 0.507 | — | 0.597 | — | ns |
| Read asynchronous reset recovery time (non-pipelined clock) | | 0.236 | — | 0.278 | — | ns |
| Read asynchronous reset to output propagation delay (with pipelined register enabled) | $T_{R2Q}$ | — | 0.839 | — | 0.987 | ns |
| Read synchronous reset setup time | $T_{SRSTSU}$ | 0.271 | — | 0.319 | — | ns |
| Read synchronous reset hold time | $T_{SRSTHD}$ | 0.061 | — | 0.071 | — | ns |
| Write clock period | $T_{CCY}$ | 4 | — | 4 | — | ns |
| Write clock minimum pulse width high | $T_{CCLKMPWH}$ | 1.8 | — | 1.8 | — | ns |
| Write clock minimum pulse width low | $T_{CCLKMPWL}$ | 1.8 | — | 1.8 | — | ns |
| Write block setup time | $T_{BLKCSU}$ | 0.404 | — | 0.476 | — | ns |
| Write block hold time | $T_{BLKCHD}$ | 0.007 | — | 0.008 | — | ns |
| Write input data setup time | $T_{DINCSU}$ | 0.115 | — | 0.135 | — | ns |
| Write input data hold time | $T_{DINCHD}$ | 0.15 | — | 0.177 | — | ns |
| Write address setup time | $T_{ADDRCSU}$ | 0.088 | — | 0.104 | — | ns |
| Write address hold time | $T_{ADDRCHD}$ | 0.128 | — | 0.15 | — | ns |
| Write enable setup time | $T_{WECSU}$ | 0.397 | — | 0.467 | — | ns |
| Write enable hold time | $T_{WECHD}$ | –0.026 | — | –0.03 | — | ns |
| Maximum frequency | $F_{MAX}$ | — | 250 | — | 250 | MHz |


© 2026 Microchip Technology Inc. and its subsidiaries

The following table lists the µSRAM in 64 × 16 mode in worst commercial-case conditions when $T_J$ = 85 °C, $V_{DD}$ = 1.14V.

**TABLE 3-236: MSRAM (RAM64X16) IN 64 × 16 MODE**

| Parameter | Symbol | –1 | | –Std | | Unit |
|---|---|---|---|---|---|---|
| | | Min. | Max. | Min. | Max. | |
| Read clock period | $T_{CY}$ | 4 | — | 4 | — | ns |
| Read clock minimum pulse width high | $T_{CLKMPWH}$ | 1.8 | — | 1.8 | — | ns |
| Read clock minimum pulse width low | $T_{CLKMPWL}$ | 1.8 | — | 1.8 | — | ns |
| Read pipeline clock period | $T_{PLCY}$ | 4 | — | 4 | — | ns |
| Read pipeline clock minimum pulse width high | $T_{PLCLKMPWH}$ | 1.8 | — | 1.8 | — | ns |
| Read pipeline clock minimum pulse width low | $T_{PLCLKMPWL}$ | 1.8 | — | 1.8 | — | ns |
| Read access time with pipeline register | $T_{CLK2Q}$ | — | 0.266 | — | 0.313 | ns |
| Read access time without pipeline register | | — | 1.677 | — | 1.973 | ns |
| Read address setup time in synchronous mode | $T_{ADDRSU}$ | 0.301 | — | 0.354 | — | ns |
| Read address setup time in asynchronous mode | | 1.856 | — | 2.184 | — | ns |
| Read address hold time in synchronous mode | $T_{ADDRHD}$ | 0.091 | — | 0.107 | — | ns |
| Read address hold time in asynchronous mode | | –0.778 | — | –0.915 | — | ns |
| Read enable setup time | $T_{RDENSU}$ | 0.278 | — | 0.327 | — | ns |
| Read enable hold time | $T_{RDENHD}$ | 0.057 | — | 0.067 | — | ns |
| Read block select setup time | $T_{BLKSU}$ | 1.839 | — | 2.163 | — | ns |
| Read block select hold time | $T_{BLKHD}$ | –0.65 | — | –0.765 | — | ns |
| Read block select to out disable time (when pipelined register is disabled) | $T_{BLK2Q}$ | | 2.036 | | 2.396 | ns |
| Read asynchronous reset removal time (pipelined clock) | $T_{RSTREM}$ | –0.023 | — | –0.027 | — | ns |
| Read asynchronous reset removal time (non-pipelined clock) | | 0.046 | — | 0.054 | — | ns |
| Read asynchronous reset recovery time (pipelined clock) | $T_{RSTREC}$ | 0.507 | — | 0.597 | — | ns |
| Read asynchronous reset recovery time (non-pipelined clock) | | 0.236 | — | 0.278 | — | ns |
| Read asynchronous reset to output propagation delay (with pipelined register enabled) | $T_{R2Q}$ | — | 0.835 | | 0.983 | ns |
| Read synchronous reset setup time | $T_{SRSTSU}$ | 0.271 | — | 0.319 | — | ns |
| Read synchronous reset hold time | $T_{SRSTHD}$ | 0.061 | — | 0.071 | — | ns |
| Write clock period | $T_{CCY}$ | 4 | — | 4 | — | ns |
| Write clock minimum pulse width high | $T_{CCLKMPWH}$ | 1.8 | — | 1.8 | — | ns |
| Write clock minimum pulse width low | $T_{CCLKMPWL}$ | 1.8 | — | 1.8 | — | ns |
| Write block setup time | $T_{BLKCSU}$ | 0.404 | — | 0.476 | — | ns |
| Write block hold time | $T_{BLKCHD}$ | 0.007 | — | 0.008 | — | ns |
| Write input data setup time | $T_{DINCSU}$ | 0.115 | — | 0.135 | — | ns |
| Write input data hold time | $T_{DINCHD}$ | 0.15 | — | 0.177 | — | ns |
| Write address setup time | $T_{ADDRCSU}$ | 0.088 | — | 0.104 | — | ns |
| Write address hold time | $T_{ADDRCHD}$ | 0.128 | — | 0.15 | — | ns |
| Write enable setup time | $T_{WECSU}$ | 0.397 | — | 0.467 | — | ns |
| Write enable hold time | $T_{WECHD}$ | –0.026 | — | –0.03 | — | ns |
| Maximum frequency | $F_{MAX}$ | | 250 | — | 250 | MHz |

The following table lists the µSRAM in 128 × 9 mode in worst commercial-case conditions when $T_J$ = 85 °C, $V_{DD}$ = 1.14V.

**TABLE 3-237: MSRAM (RAM128X9) IN 128 × 9 MODE**

| Parameter | Symbol | –1 | | –Std | | Unit |
|---|---|---|---|---|---|---|
| | | Min. | Max. | Min. | Max. | |
| Read clock period | $T_{CY}$ | 4 | — | 4 | — | ns |
| Read clock minimum pulse width high | $T_{CLKMPWH}$ | 1.8 | — | 1.8 | — | ns |
| Read clock minimum pulse width low | $T_{CLKMPWL}$ | 1.8 | — | 1.8 | — | ns |
| Read pipeline clock period | $T_{PLCY}$ | 4 | — | 4 | — | ns |
| Read pipeline clock minimum pulse width high | $T_{PLCLKMPWH}$ | 1.8 | — | 1.8 | — | ns |
| Read pipeline clock minimum pulse width low | $T_{PLCLKMPWL}$ | 1.8 | — | 1.8 | — | ns |
| Read access time with pipeline register | $T_{CLK2Q}$ | | 0.266 | | 0.313 | ns |
| Read access time without pipeline register | | | 1.677 | | 1.973 | ns |
| Read address setup time in synchronous mode | $T_{ADDRSU}$ | 0.301 | — | 0.354 | — | ns |
| Read address setup time in asynchronous mode | | 1.856 | — | 2.184 | — | ns |
| Read address hold time in synchronous mode | $T_{ADDRHD}$ | 0.091 | — | 0.107 | — | ns |
| Read address hold time in asynchronous mode | | –0.778 | — | –0.915 | — | ns |
| Read enable setup time | $T_{RDENSU}$ | 0.278 | — | 0.327 | — | ns |
| Read enable hold time | $T_{RDENHD}$ | 0.057 | — | 0.067 | — | ns |
| Read block select setup time | $T_{BLKSU}$ | 1.839 | — | 2.163 | — | ns |
| Read block select hold time | $T_{BLKHD}$ | –0.65 | — | –0.765 | — | ns |
| Read block select to out disable time (when pipelined register is disabled) | $T_{BLK2Q}$ | — | 2.036 | — | 2.396 | ns |
| Read asynchronous reset removal time (pipelined clock) | $T_{RSTREM}$ | –0.023 | — | –0.027 | — | ns |
| Read asynchronous reset removal time (non-pipelined clock) | | 0.046 | — | 0.054 | — | ns |
| Read asynchronous reset recovery time (pipelined clock) | $T_{RSTREC}$ | 0.507 | — | 0.597 | — | ns |
| Read asynchronous reset recovery time (non-pipelined clock) | | 0.236 | — | 0.278 | | ns |
| Read asynchronous reset to output propagation delay (with pipelined register enabled) | $T_{R2Q}$ | — | 0.835 | — | 0.982 | ns |
| Read synchronous reset setup time | $T_{SRSTSU}$ | 0.271 | — | 0.319 | — | ns |
| Read synchronous reset hold time | $T_{SRSTHD}$ | 0.061 | — | 0.071 | — | ns |
| Write clock period | $T_{CCY}$ | 4 | — | 4 | — | ns |
| Write clock minimum pulse width high | $T_{CCLKMPWH}$ | 1.8 | — | 1.8 | — | ns |
| Write clock minimum pulse width low | $T_{CCLKMPWL}$ | 1.8 | — | 1.8 | — | ns |
| Write block setup time | $T_{BLKCSU}$ | 0.404 | — | 0.476 | — | ns |
| Write block hold time | $T_{BLKCHD}$ | 0.007 | — | 0.008 | — | ns |
| Write input data setup time | $T_{DINCSU}$ | 0.115 | — | 0.135 | — | ns |
| Write input data hold time | $T_{DINCHD}$ | 0.15 | — | 0.177 | — | ns |
| Write address setup time | $T_{ADDRCSU}$ | 0.088 | — | 0.104 | — | ns |
| Write address hold time | $T_{ADDRCHD}$ | 0.128 | — | 0.15 | — | ns |
| Write enable setup time | $T_{WECSU}$ | 0.397 | — | 0.467 | — | ns |
| Write enable hold time | $T_{WECHD}$ | –0.026 | — | –0.03 | — | ns |
| Maximum frequency | $F_{MAX}$ | — | 250 | — | 250 | MHz |


© 2026 Microchip Technology Inc. and its subsidiaries

The following table lists the µSRAM in 128 × 8 mode in worst commercial-case conditions when $T_J$ = 85 °C, $V_{DD}$ = 1.14V.

**TABLE 3-238: MSRAM (RAM128X8) IN 128 × 8 MODE**

| Parameter | Symbol | –1 | | –Std | | Unit |
|---|---|---|---|---|---|---|
| | | Min. | Max. | Min. | Max. | |
| Read clock period | $T_{CY}$ | 4 | — | 4 | — | ns |
| Read clock minimum pulse width high | $T_{CLKMPWH}$ | 1.8 | — | 1.8 | — | ns |
| Read clock minimum pulse width low | $T_{CLKMPWL}$ | 1.8 | — | 1.8 | — | ns |
| Read pipeline clock period | $T_{PLCY}$ | 4 | — | 4 | — | ns |
| Read pipeline clock minimum pulse width high | $T_{PLCLKMPWH}$ | 1.8 | — | 1.8 | — | ns |
| Read pipeline clock minimum pulse width low | $T_{PLCLKMPWL}$ | 1.8 | — | 1.8 | — | ns |
| Read access time with pipeline register | $T_{CLK2Q}$ | — | 0.266 | | 0.313 | ns |
| Read access time without pipeline register | | — | 1.677 | | 1.973 | ns |
| Read address setup time in synchronous mode | $T_{ADDRSU}$ | 0.301 | — | 0.354 | — | ns |
| Read address setup time in asynchronous mode | | 1.856 | — | 2.184 | — | ns |
| Read address hold time in synchronous mode | $T_{ADDRHD}$ | 0.091 | — | 0.107 | — | ns |
| Read address hold time in asynchronous mode | | –0.778 | — | –0.915 | — | ns |
| Read enable setup time | $T_{RDENSU}$ | 0.278 | — | 0.327 | — | ns |
| Read enable hold time | $T_{RDENHD}$ | 0.057 | — | 0.067 | — | ns |
| Read block select setup time | $T_{BLKSU}$ | 1.839 | — | 2.163 | — | ns |
| Read block select hold time | $T_{BLKHD}$ | –0.65 | — | –0.765 | — | ns |
| Read block select to out disable time (when pipelined register is disabled) | $T_{BLK2Q}$ | — | 2.036 | — | 2.396 | ns |
| Read asynchronous reset removal time (pipelined clock) | $T_{RSTREM}$ | –0.023 | — | –0.027 | — | ns |
| Read asynchronous reset removal time (non-pipelined clock) | | 0.046 | — | 0.054 | — | ns |
| Read asynchronous reset recovery time (pipelined clock) | $T_{RSTREC}$ | 0.507 | — | 0.597 | — | ns |
| Read asynchronous reset recovery time (non-pipelined clock) | | 0.236 | — | 0.278 | — | ns |
| Read asynchronous reset to output propagation delay (with pipelined register enabled) | $T_{R2Q}$ | — | 0.835 | — | 0.982 | ns |
| Read synchronous reset setup time | $T_{SRSTSU}$ | 0.271 | — | 0.319 | — | ns |
| Read synchronous reset hold time | $T_{SRSTHD}$ | 0.061 | — | 0.071 | — | ns |
| Write clock period | $T_{CCY}$ | 4 | — | 4 | — | ns |
| Write clock minimum pulse width high | $T_{CCLKMPWH}$ | 1.8 | — | 1.8 | — | ns |
| Write clock minimum pulse width low | $T_{CCLKMPWL}$ | 1.8 | — | 1.8 | — | ns |
| Write block setup time | $T_{BLKCSU}$ | 0.404 | — | 0.476 | — | ns |
| Write block hold time | $T_{BLKCHD}$ | 0.007 | — | 0.008 | — | ns |
| Write input data setup time | $T_{DINCSU}$ | 0.115 | — | 0.135 | — | ns |
| Write input data hold time | $T_{DINCHD}$ | 0.15 | — | 0.177 | — | ns |
| Write address setup time | $T_{ADDRCSU}$ | 0.088 | — | 0.104 | — | ns |
| Write address hold time | $T_{ADDRCHD}$ | 0.128 | — | 0.15 | — | ns |
| Write enable setup time | $T_{WECSU}$ | 0.397 | — | 0.467 | — | ns |
| Write enable hold time | $T_{WECHD}$ | –0.026 | — | –0.03 | — | ns |
| Maximum frequency | $F_{MAX}$ | — | 250 | — | 250 | MHz |

The following table lists the µSRAM in 256 × 4 mode in worst commercial-case conditions when $T_J$ = 85 °C, $V_{DD}$ = 1.14V.

**TABLE 3-239: MSRAM (RAM256X4) IN 256 × 4 MODE**

| Parameter | Symbol | –1 | | –Std | | Unit |
|---|---|---|---|---|---|---|
| | | Min. | Max. | Min. | Max. | |
| Read clock period | $T_{CY}$ | 4 | — | 4 | — | ns |
| Read clock minimum pulse width high | $T_{CLKMPWH}$ | 1.8 | — | 1.8 | — | ns |
| Read clock minimum pulse width low | $T_{CLKMPWL}$ | 1.8 | — | 1.8 | — | ns |
| Read pipeline clock period | $T_{PLCY}$ | 4 | — | 4 | — | ns |
| Read pipeline clock minimum pulse width high | $T_{PLCLKMPWH}$ | 1.8 | — | 1.8 | — | ns |
| Read pipeline clock minimum pulse width low | $T_{PLCLKMPWL}$ | 1.8 | — | 1.8 | — | ns |
| Read access time with pipeline register | $T_{CLK2Q}$ | — | 0.27 | — | 0.31 | ns |
| Read access time without pipeline register | | — | 1.75 | — | 2.06 | ns |
| Read address setup time in synchronous mode | $T_{ADDRSU}$ | 0.301 | — | 0.354 | — | ns |
| Read address setup time in asynchronous mode | | 1.931 | — | 2.272 | — | ns |
| Read address hold time in synchronous mode | $T_{ADDRHD}$ | 0.121 | — | 0.142 | — | ns |
| Read address hold time in asynchronous mode | | –0.65 | — | –0.76 | — | ns |
| Read enable setup time | $T_{RDENSU}$ | 0.278 | — | 0.327 | — | ns |
| Read enable hold time | $T_{RDENHD}$ | 0.057 | — | 0.067 | — | ns |
| Read block select setup time | $T_{BLKSU}$ | 1.839 | — | 2.163 | — | ns |
| Read block select hold time | $T_{BLKHD}$ | –0.65 | — | –0.77 | — | ns |
| Read block select to out disable time (when pipelined register is disabled) | $T_{BLK2Q}$ | — | 2.09 | — | 2.46 | ns |
| Read asynchronous reset removal time (pipelined clock) | $T_{RSTREM}$ | –0.02 | — | –0.03 | — | ns |
| Read asynchronous reset removal time (non-pipelined clock) | | 0.046 | — | 0.054 | — | ns |
| Read asynchronous reset recovery time (pipelined clock) | $T_{RSTREC}$ | 0.507 | — | 0.597 | — | ns |
| Read asynchronous reset recovery time (non-pipelined clock) | | 0.236 | — | 0.278 | — | ns |
| Read asynchronous reset to output propagation delay (with pipelined register enabled) | $T_{R2Q}$ | — | 0.83 | | 0.98 | ns |
| Read synchronous reset setup time | $T_{SRSTSU}$ | 0.271 | — | 0.319 | — | ns |
| Read synchronous reset hold time | $T_{SRSTHD}$ | 0.061 | — | 0.071 | — | ns |
| Write clock period | $T_{CCY}$ | 4 | — | 4 | — | ns |
| Write clock minimum pulse width high | $T_{CCLKMPWH}$ | 1.8 | — | 1.8 | — | ns |
| Write clock minimum pulse width low | $T_{CCLKMPWL}$ | 1.8 | — | 1.8 | — | ns |
| Write block setup time | $T_{BLKCSU}$ | 0.404 | — | 0.476 | — | ns |
| Write block hold time | $T_{BLKCHD}$ | 0.007 | — | 0.008 | — | ns |
| Write input data setup time | $T_{DINCSU}$ | 0.101 | — | 0.118 | — | ns |
| Write input data hold time | $T_{DINCHD}$ | 0.137 | — | 0.161 | — | ns |
| Write address setup time | $T_{ADDRCSU}$ | 0.088 | — | 0.104 | — | ns |
| Write address hold time | $T_{ADDRCHD}$ | 0.245 | — | 0.288 | — | ns |
| Write enable setup time | $T_{WECSU}$ | 0.397 | — | 0.467 | — | ns |
| Write enable hold time | $T_{WECHD}$ | –0.03 | — | –0.03 | — | ns |
| Maximum frequency | $F_{MAX}$ | — | 250 | — | 250 | MHz |


© 2026 Microchip Technology Inc. and its subsidiaries

The following table lists the µSRAM in 512 × 2 mode in worst commercial-case conditions when $T_J$ = 85 °C, $V_{DD}$ = 1.14V.

**TABLE 3-240: MSRAM (RAM512X2) IN 512 × 2 MODE**

| Parameter | Symbol | –1 | | –Std | | Unit |
|---|---|---|---|---|---|---|
| | | Min. | Max. | Min. | Max. | |
| Read clock period | $T_{CY}$ | 4 | — | 4 | — | ns |
| Read clock minimum pulse width high | $T_{CLKMPWH}$ | 1.8 | — | 1.8 | — | ns |
| Read clock minimum pulse width low | $T_{CLKMPWL}$ | 1.8 | — | 1.8 | — | ns |
| Read pipeline clock period | $T_{PLCY}$ | 4 | — | 4 | — | ns |
| Read pipeline clock minimum pulse width high | $T_{PLCLKMPWH}$ | 1.8 | — | 1.8 | — | ns |
| Read pipeline clock minimum pulse width low | $T_{PLCLKMPWL}$ | 1.8 | — | 1.8 | — | ns |
| Read access time with pipeline register | $T_{CLK2Q}$ | — | 0.27 | — | 0.31 | ns |
| Read access time without pipeline register | | — | 1.76 | — | 2.08 | ns |
| Read address setup time in synchronous mode | $T_{ADDRSU}$ | 0.301 | — | 0.354 | — | ns |
| Read address setup time in asynchronous mode | | 1.96 | — | 2.306 | — | ns |
| Read address hold time in synchronous mode | $T_{ADDRHD}$ | 0.137 | — | 0.161 | — | ns |
| Read address hold time in asynchronous mode | | –0.58 | — | –0.68 | — | ns |
| Read enable setup time | $T_{RDENSU}$ | 0.278 | — | 0.327 | — | ns |
| Read enable hold time | $T_{RDENHD}$ | 0.057 | — | 0.067 | — | ns |
| Read block select setup time | $T_{BLKSU}$ | 1.839 | — | 2.163 | — | ns |
| Read block select hold time | $T_{BLKHD}$ | –0.65 | — | –0.77 | — | ns |
| Read block select to out disable time (when pipelined register is disabled) | $T_{BLK2Q}$ | — | 2.14 | — | 2.52 | ns |
| Read asynchronous reset removal time (pipelined clock) | $T_{RSTREM}$ | –0.02 | — | –0.03 | — | ns |
| Read asynchronous reset removal time (non-pipelined clock) | | 0.046 | — | 0.054 | — | ns |
| Read asynchronous reset recovery time (pipelined clock) | $T_{RSTREC}$ | 0.507 | — | 0.597 | — | ns |
| Read asynchronous reset recovery time (non-pipelined clock) | | 0.236 | | 0.278 | | ns |
| Read asynchronous reset to output propagation delay (with pipelined register enabled) | $T_{R2Q}$ | — | 0.83 | — | 0.98 | ns |
| Read synchronous reset setup time | $T_{SRSTSU}$ | 0.271 | — | 0.319 | — | ns |
| Read synchronous reset hold time | $T_{SRSTHD}$ | 0.061 | — | 0.071 | — | ns |
| Write clock period | $T_{CCY}$ | 4 | — | 4 | — | ns |
| Write clock minimum pulse width high | $T_{CCLKMPWH}$ | 1.8 | — | 1.8 | — | ns |
| Write clock minimum pulse width low | $T_{CCLKMPWL}$ | 1.8 | — | 1.8 | — | ns |
| Write block setup time | $T_{BLKCSU}$ | 0.404 | — | 0.476 | — | ns |
| Write block hold time | $T_{BLKCHD}$ | 0.007 | — | 0.008 | — | ns |
| Write input data setup time | $T_{DINCSU}$ | 0.101 | — | 0.118 | — | ns |
| Write input data hold time | $T_{DINCHD}$ | 0.137 | — | 0.161 | — | ns |
| Write address setup time | $T_{ADDRCSU}$ | 0.088 | — | 0.104 | — | ns |
| Write address hold time | $T_{ADDRCHD}$ | 0.247 | — | 0.29 | — | ns |
| Write enable setup time | $T_{WECSU}$ | 0.397 | — | 0.467 | — | ns |
| Write enable hold time | $T_{WECHD}$ | –0.03 | — | –0.03 | — | ns |
| Maximum frequency | $F_{MAX}$ | — | 250 | — | 250 | MHz |

The following table lists the µSRAM in 1024 × 1 mode in worst commercial-case conditions when $T_J$ = 85 °C, $V_{DD}$ = 1.14V.

**TABLE 3-241: MSRAM (RAM1024X1) IN 1024 × 1 MODE**

| Parameter | Symbol | –1 | | –Std | | Unit |
|---|---|---|---|---|---|---|
| | | Min. | Max. | Min. | Max. | |
| Read clock period | $T_{CY}$ | 4 | — | 4 | — | ns |
| Read clock minimum pulse width high | $T_{CLKMPWH}$ | 1.8 | — | 1.8 | — | ns |
| Read clock minimum pulse width low | $T_{CLKMPWL}$ | 1.8 | — | 1.8 | — | ns |
| Read pipeline clock period | $T_{PLCY}$ | 4 | — | 4 | — | ns |
| Read pipeline clock minimum pulse width high | $T_{PLCLKMPWH}$ | 1.8 | — | 1.8 | — | ns |
| Read pipeline clock minimum pulse width low | $T_{PLCLKMPWL}$ | 1.8 | — | 1.8 | — | ns |
| Read access time with pipeline register | $T_{CLK2Q}$ | — | 0.27 | — | 0.31 | ns |
| Read access time without pipeline register | | — | 1.78 | — | 2.1 | ns |
| Read address setup time in synchronous mode | $T_{ADDRSU}$ | 0.301 | — | 0.354 | — | ns |
| Read address setup time in asynchronous mode | | 1.978 | — | 2.327 | — | ns |
| Read address hold time in synchronous mode | $T_{ADDRHD}$ | 0.137 | — | 0.161 | — | ns |
| Read address hold time in asynchronous mode | | –0.6 | — | –0.71 | — | ns |
| Read enable setup time | $T_{RDENSU}$ | 0.278 | — | 0.327 | — | ns |
| Read enable hold time | $T_{RDENHD}$ | 0.057 | — | 0.067 | — | ns |
| Read block select setup time | $T_{BLKSU}$ | 1.839 | — | 2.163 | — | ns |
| Read block select hold time | $T_{BLKHD}$ | –0.65 | | –0.77 | — | ns |
| Read block select to out disable time (when pipelined register is disabled) | $T_{BLK2Q}$ | — | 2.16 | — | 2.54 | ns |
| Read asynchronous reset removal time (pipelined clock) | $T_{RSTREM}$ | –0.02 | — | –0.03 | — | ns |
| Read asynchronous reset removal time (non-pipelined clock) | | 0.046 | — | 0.054 | — | ns |
| Read asynchronous reset recovery time (pipelined clock) | $T_{RSTREC}$ | 0.507 | — | 0.597 | — | ns |
| Read asynchronous reset recovery time (non-pipelined clock) | | 0.236 | — | 0.278 | — | ns |
| Read asynchronous reset to output propagation delay (with pipelined register enabled) | $T_{R2Q}$ | — | 0.83 | — | 0.98 | ns |
| Read synchronous reset setup time | $T_{SRSTSU}$ | 0.271 | — | 0.319 | — | ns |
| Read synchronous reset hold time | $T_{SRSTHD}$ | 0.061 | — | 0.071 | — | ns |
| Write clock period | $T_{CCY}$ | 4 | — | 4 | — | ns |
| Write clock minimum pulse width high | $T_{CCLKMPWH}$ | 1.8 | — | 1.8 | — | ns |
| Write clock minimum pulse width low | $T_{CCLKMPWL}$ | 1.8 | — | 1.8 | — | ns |
| Write block setup time | $T_{BLKCSU}$ | 0.404 | — | 0.476 | — | ns |
| Write block hold time | $T_{BLKCHD}$ | 0.007 | — | 0.008 | — | ns |
| Write input data setup time | $T_{DINCSU}$ | 0.003 | — | 0.004 | — | ns |
| Write input data hold time | $T_{DINCHD}$ | 0.137 | — | 0.161 | — | ns |
| Write address setup time | $T_{ADDRCSU}$ | 0.088 | — | 0.104 | — | ns |
| Write address hold time | $T_{ADDRCHD}$ | 0.247 | — | 0.29 | — | ns |
| Write enable setup time | $T_{WECSU}$ | 0.397 | — | 0.467 | — | ns |
| Write enable hold time | $T_{WECHD}$ | –0.03 | — | –0.03 | — | ns |
| Maximum frequency | $F_{MAX}$ | — | 250 | — | 250 | MHz |


© 2026 Microchip Technology Inc. and its subsidiaries

## 3.13 Programming Times

The following table lists the programming times in typical conditions when TJ = 25 °C, $V_{DD}$ = 1.2V. External SPI flash part# AT25DF641-s3H is used during this measurement.

**TABLE 3-242: PROGRAMMING TIMES (TYPICAL CONDITIONS)**

| | | | | | | | | | | | | Auto Programming | Auto Update | Programming Recovery | |
|---|---|---|---|---|---|---|---|---|---|---|---|---|---|---|---|
| | | | JTAG Programming | | 2 Step IAP Programming | | | MSS/Cortex-M3 ISP Programming (SmartFusion 2 Only) | | | | SPI CLK = 100 KHz | SPI CLK = 12.5 MHz | SPI CLK = 12.5 MHz | |
| | Device | Image Size Bytes | Program | Verify | Authenticate | Program | Verify | Authenticate | Program | Verify | | Program | Program | Program | Units |
| Fabric Only | 005 | 302,672 | 22 | 10 | 4 | 17 | 6 | 6 | 19 | 8 | | 47 | 28 | 28 | Sec |
| | 010 | 568,784 | 28 | 18 | 7 | 23 | 12 | 10 | 26 | 14 | | 77 | 35 | 35 | Sec |
| | 025 | 1,223,504 | 51 | 26 | 14 | 33 | 23 | 21 | 39 | 29 | | 150 | 41 | 41 | Sec |
| | 050 | 2,424,832 | 66 | 54 | 29 | 52 | 40 | 39 | 60 | 50 | | 33[1] | Not Supported | | Sec |
| | 060 | 2,418,896 | 77 | 54 | 39 | 61 | 50 | 44 | 65 | 54 | | 291 | 82 | 82 | Sec |
| | 090 | 3,645,968 | 113 | 126 | 60 | 84 | 73 | 66 | 90 | 79 | | 427 | 108 | 108 | Sec |
| | 150 | 6,139,184 | 155 | 193 | 100 | 132 | 120 | 108 | 140 | 128 | | 708 | 160 | 160 | Sec |
| | | | | | | | | | | | | | | | |
| eNVM Only | 005 | 137,536 | 39 | 4 | 2 | 37 | 5 | 3 | 42 | 4 | | 41 | 49 | 49 | Sec |
| | 010 | 274,816 | 78 | 9 | 4 | 76 | 11 | 4 | 82 | 7 | | 86 | 87 | 87 | Sec |
| | 025 | 274,816 | 78 | 9 | 4 | 78 | 10 | 4 | 82 | 8 | | 87 | 86 | 86 | Sec |
| | 050 | 278,528 | 84 | 8 | 3 | 85 | 9 | 4 | 80 | 8 | | 85 | Not Supported | | Sec |
| | 060 | 268,480 | 76 | 8 | 5 | 76 | 22 | 6 | 80 | 8 | | 78 | 86 | 86 | Sec |
| | 090 | 544,496 | 154 | 15 | 10 | 152 | 43 | 10 | 157 | 15 | | 154 | 162 | 162 | Sec |
| | 150 | 544,496 | 155 | 15 | 10 | 153 | 44 | 10 | 158 | 15 | | 161 | 161 | 161 | Sec |
| | | | | | | | | | | | | | | | |
| Fabric and eNVM | 005 | 439,296 | 59 | 11 | 6 | 56 | 11 | 9 | 61 | 11 | | 87 | 66 | 66 | Sec |
| | 010 | 842,688 | 107 | 20 | 11 | 100 | 21 | 15 | 107 | 21 | | 161 | 113 | 113 | Sec |
| | 025 | 1,497,408 | 120 | 35 | 19 | 113 | 32 | 26 | 121 | 35 | | 229 | 121 | 121 | Sec |
| | 050 | 2,695,168 | 162 | 59 | 32 | 136 | 48 | 43 | 141 | 55 | | 112 | Not Supported | | Sec |
| | 060 | 2,686,464 | 158 | 70 | 43 | 137 | 70 | 48 | 143 | 60 | | 368 | 158 | 158 | Sec |
| | 090 | 4,190,208 | 266 | 147 | 68 | 236 | 115 | 75 | 244 | 91 | | 582 | 260 | 260 | Sec |
| | 150 | 6,682,768 | 316 | 231 | 109 | 286 | 162 | 117 | 296 | 141 | | 867 | 310 | 310 | Sec |

1 Auto Programming in 050 device is done through SC_SPI, and SPI CLK is set to 6.25 MHz.

**2:** These programming methods only support programming action.

The following table lists the programming times in worst-case conditions when $T_J$ = 100 °C, $V_{DD}$ = 1.14V. External SPIflash part# AT25DF641-s3H is used during this measurement.

## 3.14 Math Block Timing Characteristics

The fundamental building block in any digital signal processing algorithm is the multiply-accumulate function. Each IGLOO 2 and SmartFusion 2 SoC math block supports 18×18 signed multiplication, dot product, and built-in addition, subtraction, and accumulation units to combine multiplication results efficiently. The following table lists the math blocks with all registers used in worst commercial-case conditions when $T_J$ = 85 °C and $V_{DD}$ = 1.14V.

**TABLE 3-243: MATH BLOCKS WITH ALL REGISTERS USED**

| Parameter | Symbol | –1 | | –Std | | Unit |
|---|---|---|---|---|---|---|
| | | Min. | Max. | Min. | Max. | |
| Input, control register setup time | $T_{MISU}$ | 0.149 | — | 0.176 | — | ns |
| Input, control register hold time | $T_{MIHD}$ | 1.68 | — | 1.976 | — | ns |
| CDIN input setup time | $T_{MOCDINSU}$ | 0.185 | — | 0.218 | — | ns |
| CDIN input hold time | $T_{MOCDINHD}$ | 0.08 | — | 0.094 | — | ns |
| Synchronous reset/enable setup time | $T_{MSRSTENSU}$ | –0.419 | — | –0.493 | — | ns |
| Synchronous reset/enable hold time | $T_{MSRSTENHD}$ | 0.011 | — | 0.013 | — | ns |
| Asynchronous reset removal time | $T_{MARSTREM}$ | 0 | — | 0 | — | ns |
| Asynchronous reset recovery time | $T_{MARSTREC}$ | 0.088 | | 0.104 | — | ns |
| Output register clock to out delay | $T_{MOCQ}$ | — | 0.232 | | 0.273 | ns |
| CLK minimum period | $T_{MCLKMP}$ | 2.245 | — | 2.641 | — | ns |

The following table lists the math blocks with input bypassed and output registers used in worst commercial-case conditions when $T_J$ = 85 °C and $V_{DD}$ = 1.14 V.

**TABLE 3-244: MATH BLOCK WITH INPUT BYPASSED AND OUTPUT REGISTERS USED**

| Parameter | Symbol | –1 | | –Std | | Unit |
|---|---|---|---|---|---|---|
| | | Min. | Max. | Min. | Max. | |
| Output register setup time | $T_{MOSU}$ | 2.294 | — | 2.699 | — | ns |
| Output register hold time | $T_{MOHD}$ | 1.68 | — | 1.976 | — | ns |
| CDIN input setup time | $T_{MOCDINSU}$ | 0.115 | — | 0.136 | — | ns |
| CDIN input hold time | $T_{MOCDINHD}$ | –0.444 | — | –0.522 | — | ns |
| Synchronous reset/enable setup time | $T_{MSRSTENSU}$ | –0.419 | — | –0.493 | — | ns |
| Synchronous reset/enable hold time | $T_{MSRSTENHD}$ | 0.011 | — | 0.013 | — | ns |
| Asynchronous reset removal time | $T_{MARSTREM}$ | 0 | — | 0 | — | ns |
| Asynchronous reset recovery time | $T_{MARSTREC}$ | 0.014 | — | 0.017 | — | ns |
| Output register clock to out delay | $T_{MOCQ}$ | — | 0.232 | | 0.273 | ns |
| CLK minimum period | $T_{MCLKMP}$ | 2.179 | — | 2.563 | — | ns |

The following table lists the math blocks with input register used and output in bypass mode in worst commercial-case conditions when $T_J$ = 85 °C and $V_{DD}$ = 1.14V.

**TABLE 3-245: MATH BLOCK WITH INPUT REGISTER USED AND OUTPUT IN BYPASS MODE**

| Parameter | Symbol | –1 | | –Std | | Unit |
|---|---|---|---|---|---|---|
| | | Min. | Max. | Min. | Max. | |


© 2026 Microchip Technology Inc. and its subsidiaries

**TABLE 3-245: MATH BLOCK WITH INPUT REGISTER USED AND OUTPUT IN BYPASS MODE**

| | | | | | | |
|---|---|---|---|---|---|---|
| Input register setup time | $T_{MISU}$ | 0.149 | — | 0.176 | — | ns |
| Input register hold time | $T_{MIHD}$ | 0.185 | — | 0.218 | — | ns |
| Synchronous reset/enable setup time | $T_{MSRSTENSU}$ | 0.08 | — | 0.094 | — | ns |
| Synchronous reset/enable hold time | $T_{MSRSTENHD}$ | –0.012 | — | –0.014 | — | ns |
| Asynchronous reset removal time | $T_{MARSTREM}$ | –0.005 | — | –0.005 | — | ns |
| Asynchronous reset recovery time | $T_{MARSTREC}$ | 0.088 | — | 0.104 | — | ns |
| Input register clock to output delay | $T_{MICQ}$ | — | 2.52 | — | 2.964 | ns |
| CDIN to output delay | $T_{MCDIN2Q}$ | — | 1.951 | — | 2.295 | ns |

The following table lists the math blocks with input and output in bypass mode in worst commercial-case conditions when $T_J$ = 85 °C and $V_{DD}$ = 1.14 V.

**TABLE 3-246: MATH BLOCK WITH INPUT AND OUTPUT IN BYPASS MODE**

| Parameter | Symbol | –1 | –Std | Unit |
|---|---|---|---|---|
| | | Max. | Max. | |
| Input to output delay | $T_{MIQ}$ | 2.568 | 3.022 | ns |
| CDIN to output delay | $T_{MCDIN2Q}$ | 1.951 | 2.295 | ns |

## 3.15 Embedded NVM (eNVM) Characteristics

The following table lists the eNVM read performance in worst-case conditions, when $V_{DD}$ = 1.14 V and $V_{PPNVM}$ = $V_{PP}$ = 2.375V.

**TABLE 3-247: ENVM READ PERFORMANCE**

| Symbol | Description | Operating Temperature Range | | | | | | Unit |
|---|---|---|---|---|---|---|---|---|
| | | –1 | –Std | –1 | –Std | –1 | –Std | |
| $T_J$ | Junction temperature range | –55 °C to 125 °C | | –40 °C to 100 °C | | 0 °C to 85 °C | | °C |
| $F_{MAXREAD}$ | eNVM maximum read frequency | 25 | 25 | 25 | 25 | 25 | 25 | MHz |

The following table lists the eNVM page programming in worst-case conditions when $V_{DD}$ = 1.14 V and $V_{PPNVM}$ = $V_{PP}$ = 2.375V.

**TABLE 3-248: ENVM PAGE PROGRAMMING**

| Symbol | Description | Operating Temperature Range | | | | | | Unit |
|---|---|---|---|---|---|---|---|---|
| | | –1 | –Std | –1 | –Std | –1 | –Std | |
| $T_J$ | Junction temperature range | –55 °C to 125 °C | | –40 °C to 100 °C | | 0 °C to 85 °C | | °C |
| $T_{PAGEPGM}$ | eNVM page programming time | 40 | 40 | 40 | 40 | 40 | 40 | ms |

## 3.16 SRAM PUF

For more details on static random-access memory (SRAM) physical unclonable functions (PUF) services, see https://www.microchip.com/en-us/products/fpgas-and-plds/fpgas/igloo-2-fpgas#Documentation.

The following table lists the SRAM PUF in worst-case industrial conditions when $T_J$ = 100 °C and $V_{DD}$ = 1.14V.

**TABLE 3-249: SRAM PUF**

| Service | PUF Off | | PUF On | | Unit |
|---|---|---|---|---|---|
| | Typ. | Max. | Typ. | Max. | |
| Create activation code | 709.1 | 746.4 | 754.4 | 762.5 | ms |
| Delete activation code | 1329.3 | 1399.3 | 1414.1 | 1429.3 | ms |

**TABLE 3-249: SRAM PUF (CONTINUED)**

| Service | PUF Off | | PUF On | | Unit |
|---|---|---|---|---|---|
| | Typ. | Max. | Typ. | Max. | |
| Create intrinsic keycode | 656.6 | 691.1 | 698.5 | 706.0 | ms |
| Create extrinsic keycode | 656.6 | 691.1 | 698.5 | 706.0 | ms |
| Get number of keys | 1.3 | 1.4 | 1.4 | 1.4 | ms |
| Export (Kc0, Kc1) | 998.0 | 1050.5 | 1061.7 | 1073.1 | ms |
| Export 2 keycodes | 2020.2 | 2126.5 | 2149.2 | 2172.3 | ms |
| Export 4 keycodes | 3065.7 | 3227.0 | 3261.3 | 3296.4 | ms |
| Export 8 keycodes | 5101.0 | 5369.5 | 5426.6 | 5485.0 | ms |
| Export 16 keycodes | 9212.1 | 9697.0 | 9800.1 | 9905.5 | ms |
| Import (Kc0, Kc1) | 39.7 | 41.8 | 42.2 | 42.7 | ms |
| Import 2 keycodes | 50.1 | 52.7 | 53.3 | 53.9 | ms |
| Import 4 keycodes | 60.6 | 63.8 | 64.5 | 65.2 | ms |
| Import 8 keycodes | 80.9 | 85.1 | 86.1 | 87.0 | ms |
| Import 16 keycodes | 123.8 | 130.4 | 131.7 | 133.2 | ms |
| Delete keycode | 552.5 | 581.6 | 587.8 | 594.1 | ms |
| Fetch key | 31.4 | 33.0 | 33.4 | 33.7 | ms |
| Fetch ecc key | 20.0 | 21.1 | 21.3 | 21.5 | ms |
| Get seed | 2.0 | 2.1 | 2.2 | 2.2 | ms |

**Note:** PUF On times are worst case because the PUF must be turned off for a minimum time before it is turned On to generate the appropriate entropy.

## 3.17 Non-Deterministic Random Bit Generator (NRBG) Characteristics

For more information about NRBG, see *AC407: Using NRBG Services in SmartFusion2 and IGLOO2 Devices Application Note.* The following table lists the NRBG in worst-case industrial conditions when $T_J$ = 100 °C and $V_{DD}$ = 1.14V.

**TABLE 3-250: NON-DETERMINISTIC RANDOM BIT GENERATOR (NRBG)**

| Service | Timing | Unit | Conditions | |
|---|---|---|---|---|
| | | | Prediction Resistance | Additional Input |
| Instantiate | 85 | ms | OFF | X |
| Generate (after Instantiate)[1] | 4.5 ms + (6.25 us/byte x No. of Bytes) | — | OFF | 0 |
| | 6.0 ms + (6.25 us/byte x No. of Bytes) | — | OFF | 64 |
| | 7.0 ms + (6.25 us/byte x No. of Bytes) | — | OFF | 128 |
| Generate (after Instantiate) | 47 | ms | ON | X |
| Generate (subsequent)[1] | 0.5 ms + (6.25 us/byte x No. of Bytes) | — | OFF | 0 |
| | 2.0 ms + (6.25 us/byte x No. of Bytes) | — | OFF | 64 |
| | 3.0 ms + (6.25 us/byte x No. of Bytes) | — | OFF | 128 |
| Generate (subsequent) | 43 | ms | ON | X |
| Reseed | 40 | ms | — | |
| Uninstantiate | 0.16 | ms | — | |
| Reset | 0.10 | ms | — | |


© 2026 Microchip Technology Inc. and its subsidiaries

**TABLE 3-250: NON-DETERMINISTIC RANDOM BIT GENERATOR (NRBG) (CONTINUED)**

| | | | |
|---|---|---|---|
| Self-test | 20 | ms | First time after power-up |
| | 6 | ms | Subsequent |

1 If PUF_OFF, generate will incur additional PUF delay time for consecutive service calls.

## 3.18 Cryptographic Block Characteristics

For more information about cryptographic block and associated services, see *AC410: Using AES System Services in SmartFusion2 and IGLOO2 Devices Application Note* and *AC432: Using SHA-256 System Services in SmartFusion2 and IGLOO2 Devices Application Note*.

The following table lists the cryptographic block characteristics in worst-case industrial conditions when $T_J$ = 100 °C and $V_{DD}$ = 1.14V.

**TABLE 3-251: CRYPTOGRAPHIC BLOCK CHARACTERISTICS**

| Service | Conditions | Timing | Unit |
|---|---|---|---|
| Any service | First certificate check penalty at boot | 11.5 | ms |
| AES128/256 (encoding/decoding)[1] | 100 blocks up to 64k blocks | 700 | Kbps |
| SHA256 | 512 bits | 540 | Kbps |
| | 1024 bits | 780 | Kbps |
| | 2048 bits | 950 | Kbps |
| | 24 kbits | 1140 | Kbps |
| HMAC | 512 bytes | 820 | Kbps |
| | 1024 bytes | 890 | Kbps |
| | 2048 bytes | 930 | Kbps |
| | 24 kbytes | 980 | Kbps |
| KeyTree | | 1.8 | ms |
| Challenge-response | PUF = OFF | 25 | ms |
| | PUF = ON | 7 | ms |
| ECC point multiplication | — | 590 | ms |
| ECC point addition | — | 8 | ms |

1 Using Cypher Block Chaining (CBC) mode.

## 3.19 Crystal Oscillator

The following table lists electrical characteristics of the crystal oscillator in the IGLOO 2 FPGA and SmartFusion 2 SoC FPGAs.

**TABLE 3-252: ELECTRICAL CHARACTERISTICS OF THE CRYSTAL OSCILLATOR—HIGH GAIN MODE (20 MHZ)**

| Parameter | Symbol | Min. | Typ. | Max. | Unit | Condition |
|---|---|---|---|---|---|---|
| Operating frequency | FXTAL | — | 20 | — | MHz | — |
| Accuracy | ACCXTAL | — | — | 0.0047 | % | 005, 010, 025, 050, 060, and 090 devices |
| | | — | — | 0.0058 | % | 150 devices |

**TABLE 3-252: ELECTRICAL CHARACTERISTICS OF THE CRYSTAL OSCILLATOR—HIGH GAIN MODE (20 MHZ) (CONTINUED)**

| Parameter | Symbol | Min. | Typ. | Max. | Unit | Condition |
|---|---|---|---|---|---|---|
| Output duty cycle | CYCXTAL | — | 49–51 | 47–53 | % | — |
| Output period jitter (peak to peak) | JITPERXTAL | — | 200 | 300 | ps | — |
| Output cycle to cycle jitter (peak to peak) | JITCYCXTAL | — | 200 | 300 | ps | 010, 025, 050, and 060 devices |
| | | — | 250 | 410 | ps | 150 devices |
| | | — | 250 | 550 | ps | 005 and 090 devices |
| Operating current | IDYNXTAL | — | 1.5 | — | mA | 010, 050, and 060 devices |
| | | — | 1.65 | — | mA | 005, 025, 090, and 150 devices |
| Input logic level high | VIHXTAL | 0.9 $V_{PP}$ | — | — | V | — |
| Input logic level low | VILXTAL | — | — | 0.1 $V_{PP}$ | V | — |
| Startup time (regarding stable oscillator output) | SUXTAL | — | — | 0.8 | ms | 005, 010, 025, and 050 devices |
| | | — | — | 1.0 | ms | 090 and 150 devices |

**TABLE 3-253: ELECTRICAL CHARACTERISTICS OF THE CRYSTAL OSCILLATOR—MEDIUM GAIN MODE (2 MHZ)**

| Parameter | Symbol | Min. | Typ. | Max. | Unit | Condition |
|---|---|---|---|---|---|---|
| Operating frequency | FXTAL | — | 2 | — | MHz | — |
| Accuracy | ACCXTAL | — | — | 0.00105 | % | 050 devices |
| | | — | — | 0.003 | % | 005, 010, 025, 090, and 150 devices |
| | | — | | 0.004 | % | 060 devices |
| Output duty cycle | CYCXTAL | — | 49–51 | 47–53 | % | — |
| Output period jitter (peak to peak) | JITPERXTAL | — | 1 | 5 | ns | — |
| Output cycle to cycle jitter (peak to peak) | JITCYCXTAL | — | 1 | 5 | ns | — |
| Operating current | IDYNXTAL | — | 0.3 | — | mA | — |
| Input logic level high | VIHXTAL | 0.9 $V_{PP}$ | — | — | V | — |
| Input logic level low | VILXTAL | — | — | 0.1 $V_{PP}$ | V | — |
| Startup time (regarding stable oscillator output) | SUXTAL | — | — | 4.5 | ms | 010 and 050 devices |
| | | — | — | 5 | ms | 005 and 025 devices |
| | | — | — | 7 | ms | 090 and 150 devices |

**TABLE 3-254: ELECTRICAL CHARACTERISTICS OF THE CRYSTAL OSCILLATOR—LOW GAIN MODE (32 KHZ)**

| Parameter | Symbol | Min. | Typ. | Max. | Unit | Condition |
|---|---|---|---|---|---|---|
| Operating frequency | FXTAL | — | 32 | — | kHz | — |
| Accuracy | ACCXTAL | — | — | 0.004 | % | 005, 010, 025, 050, 060, and 090 devices |
| | | — | — | 0.005 | % | 150 devices |
| Output duty cycle | CYCXTAL | — | 49–51 | 47–53 | % | — |


© 2026 Microchip Technology Inc. and its subsidiaries

**TABLE 3-254: ELECTRICAL CHARACTERISTICS OF THE CRYSTAL OSCILLATOR—LOW GAIN MODE (32 KHZ)**

| | | | | | | |
|---|---|---|---|---|---|---|
| Output period jitter (peak to peak) | JITPERXTAL | — | 150 | 300 | ns | — |
| Output cycle to cycle jitter (peak to peak) | JITCYCXTAL | — | 150 | 300 | ns | — |
| Operating current | IDYNXTAL | — | 0.044 | — | mA | 010 and 050 devices |
| | | — | 0.060 | — | mA | 005, 025, 060, 090, and 150 devices |
| Input logic level high | VIHXTAL | 0.9 $V_{PP}$ | — | — | V | — |
| Input logic level low | VILXTAL | — | — | 0.1 $V_{PP}$ | V | — |
| Startup time (regarding stable oscillator output) | SUXTAL | — | — | 115 | ms | 005, 025, 050, 090, and 150 devices |
| | | — | — | 126 | ms | 010 devices |

## 3.20 On-Chip Oscillator

The following tables list electrical characteristics of the available on-chip oscillators in the IGLOO 2 FPGAs and SmartFusion 2 SoC FPGAs.

**TABLE 3-255: ELECTRICAL CHARACTERISTICS OF THE 50 MHZ RC OSCILLATOR**

| Parameter | Symbol | Typ. | Max. | Unit | Condition |
|---|---|---|---|---|---|
| Operating frequency | F50RC | 50 | — | MHz | — |
| Accuracy | ACC50RC | 1 | 4 | % | 050 devices |
| | | 1 | 5 | % | 005, 025, and 060 devices |
| | | 1 | 6.3 | % | 090 devices |
| | | 1 | 7.1 | % | 010 and 150 devices |
| Output duty cycle | CYC50RC | 49–51 | 46.5–53.5 | % | — |
| Output jitter (peak to peak) | JIT50RC | — | — | — | Period Jitter |
| | | 200 | 300 | ps | 005, 010, 050, and 060 devices |
| | | 200 | 400 | ps | 150 devices |
| | | 300 | 500 | ps | 025 and 090 devices |
| | | — | — | — | Cycle-to-Cycle Jitter |
| | | 200 | 300 | ps | 005 and 050 devices |
| | | 320 | 420 | ps | 010, 060, and 150 devices |
| | | 320 | 850 | ps | 025 and 090 devices |
| Operating current | IDYN50RC | 6.5 | — | mA | — |

**TABLE 3-256: ELECTRICAL CHARACTERISTICS OF THE 1 MHZ RC OSCILLATOR**

| Parameter | Symbol | Typ. | Max. | Unit | Condition |
|---|---|---|---|---|---|
| Operating frequency | F1RC | 1 | — | MHz | — |
| Accuracy | ACC1RC | 1 | 3 | % | 005, 010, 025, and 050 devices |
| | | 1 | 4.5 | % | 060, and 150 devices |
| | | 1 | 5.6 | % | 090 devices |
| Output duty cycle | CYC1RC | 49–51 | 46.5–53.5 | % | 005, 010, 025, 050, 090 and 150 devices |
| | | 49-51 | 46.0-54.0 | % | 060 devices |

**TABLE 3-256: ELECTRICAL CHARACTERISTICS OF THE 1 MHZ RC OSCILLATOR (CONTINUED)**

| Parameter | Symbol | Typ. | Max. | Unit | Condition |
|---|---|---|---|---|---|
| Output jitter (peak to peak) | JIT1RC | — | — | — | Period Jitter |
| | | 10 | 20 | ns | 005, 010, 025, and 050 devices |
| | | 10 | 28 | ns | 060, 090 and 150 devices |
| | | — | — | — | Cycle-to-Cycle Jitter |
| | | 10 | 20 | ns | 005, 010, and 050 devices |
| | | 10 | 35 | ns | 025, 060, and 150 devices |
| | | 10 | 45 | ns | 090 devices |
| Operating current | IDYN1RC | 0.1 | — | mA | — |
| Startup time | SU1RC | — | 17 | µs | 050, 090, and 150 devices |
| | | — | 18 | µs | 005, 010, and 025 devices |

**Note:** Use of 1 MHz internal RC Oscillator as the reference clock for Fabric CCC is not recommended. The 50 MHz internal RC Oscillator must be used.

## 3.21 Clock Conditioning Circuits (CCC)

The following table lists the CCC/PLL specifications in worst-case industrial conditions when $T_J$ = 100 °C and $V_{DD}$ = 1.14V.

**TABLE 3-257: IGLOO 2 AND SMARTFUSION 2 SOC FPGAS CCC/PLL SPECIFICATION**

| Parameter | Min | Typ. | Max. | Unit | Conditions |
|---|---|---|---|---|---|
| Clock conditioning circuitry input frequency $F_{IN_CCC}$ | 1 | — | 200 | MHz | All CCC |
| | 0.032 | — | 200 | MHz | 32 kHz capable CCC |
| Clock conditioning circuitry output frequency $F_{OUT_CCC}$[1] | 0.078 | — | 400 | MHz | — |
| PLL VCO frequency[2] | 500 | — | 1000 | MHz | — |
| Delay increments in programmable delay blocks | — | 75 | 100 | ps | — |
| Number of programmable values in each programmable delay block | — | — | 64 | | — |
| Acquisition time | — | 70 | 100 | µs | $F_{IN}$ ≥ 1 MHz |
| | — | 1 | 16 | ms | $F_{IN}$ = 32 kHz |
| Input duty cycle (reference clock) | — | — | — | — | Internal Feedback |
| | 10 | — | 90 | % | 1 MHz ≤ $F_{IN_CCC}$ ≤ 25 MHz |
| | 25 | — | 75 | % | 25 MHz ≤ $F_{IN_CCC}$ ≤ 100 MHz |
| | 35 | — | 65 | % | 100 MHz ≤ $F_{IN_CCC}$ ≤ 150 MHz |
| | 45 | — | 55 | % | 150 MHz ≤ $F_{IN_CCC}$ ≤ 200 MHz |
| | — | — | — | — | External Feedback (CCC, FPGA, Off-Chip) |
| | 25 | — | 75 | % | 1 MHz ≤ $F_{IN_CCC}$ ≤ 25 MHz |
| | 35 | — | 65 | % | 25 MHz ≤ $F_{IN_CCC}$ ≤ 35 MHz |
| | 45 | — | 55 | % | 35 MHz ≤ $F_{IN_CCC}$ ≤ 50 MHz |


© 2026 Microchip Technology Inc. and its subsidiaries

**TABLE 3-257: IGLOO 2 AND SMARTFUSION 2 SOC FPGAS CCC/PLL SPECIFICATION**

| Parameter | Min | Typ. | Max. | Unit | Conditions |
|---|---|---|---|---|---|
| Output duty cycle | 48 | — | 52 | % | 050 devices $F_{OUT} \le 400$ MHz |
| | 48 | — | 52 | % | 005, 010, and 025 devices $F_{OUT} < 350$ MHz |
| | 46 | — | 54 | % | 005, 010, and 025 devices 350 MHz ≤ $F_{out} \le 400$ MHz |
| | 48 | — | 52 | % | 060 and 090 devices $F_{OUT} \le 100$ MHz |
| | 44 | — | 52 | % | 060 and 090 devices 100 MHz ≤ $F_{OUT} \le 400$ MHz |
| | 48 | — | 52 | % | 150 devices $F_{OUT} \le 120$ MHz |
| | 45 | — | 52 | % | 150 devices 120 MHz ≤ $F_{OUT} \le 400$ MHz |
| PLL_ARST_N pulse width | 1 | — | — | — | µs |
| **Spread Spectrum Characteristics** | | | | | |
| Modulation frequency range | 25 | 35 | 50 | k | — |
| Modulation depth range | 0 | | 1.5 | % | — |
| Modulation depth control | — | 0.5 | — | % | — |

1 The minimum output clock frequency is limited by the PLL. For more information, see *UG0449: SmartFusion2 and IGLOO2 Clocking Resources User Guide*.

2 The PLL is used in conjunction with the Clock Conditioning Circuitry. Performance is limited by the CCC output frequency.

The following table lists the CCC/PLL jitter specifications in worst-case industrial conditions when $T_J$ = 100 °C and $V_{DD}$ = 1.14V.

**TABLE 3-258: IGLOO 2 AND SMARTFUSION 2 SOC FPGAS CCC/PLL JITTER SPECIFICATIONS**

| **CCC Output Maximum Peak-to-Peak Period Jitter $F_{OUT_CCC}$** | | | | | | |
|---|---|---|---|---|---|---|
| **Parameter** | **Conditions/Package Combinations** | | | | | **Unit** |
| **10 FG484, 050 FG896/ FG484/FCS325 Packages[1]** | SSO = 0 | 0 < SSO ≤ 2 | SSO ≤ 4 | SSO ≤ 8 | SSO ≤ 16 | |
| 20 MHz to 100 MHz | Max. (110, ±1% x (1/$F_{OUT_CCC}$)) | Max. (150, ±1% x (1/$F_{OUT_CCC}$)) | | | | ps |
| 100 MHz to 400 MHz | Max. (120, ±1% x (1/$F_{OUT_CCC}$)) | Max. (150, ±1% x (1/$F_{OUT_CCC}$)) | | | Max. (170, ±1% x (1/$F_{OUT_CCC}$)) | ps |
| **025 FG484/FCS325 Package[1]** | 0 < SSO ≤ 16 | | | | | |
| 20 MHz to 74 MHz | ±1% x (1/$F_{OUT_CCC}$)) | | | | | ps |
| 74 MHz to 400 MHz | 210 | | | | | ps |
| **005 FG484 Package[1]** | 0 < SSO ≤ 16 | | | | | |
| 20 MHz to 53 MHz | ±1% x (1/$F_{OUT_CCC}$)) | | | | | ps |
| 53 MHz to 400 MHz | 270 | | | | | ps |
| **090 FG676 and FC325 Package[1]** | 0 < SSO ≤ 16 | | | | | |
| 20 MHz to 100 MHz | ±1% x (1/$F_{OUT_CCC}$)) | | | | | ps |

**TABLE 3-258: IGLOO 2 AND SMARTFUSION 2 SOC FPGAS CCC/PLL JITTER SPECIFICATIONS**

| CCC Output Maximum Peak-to-Peak Period Jitter $F_{OUT_CCC}$ | | |
|---|---|---|
| **Parameter** | **Conditions/Package Combinations** | **Unit** |
| 100 MHz to 400 MHz | 150 | ps |
| **060 FG676 Package**[1] | 0 < SSO ≤ 16 | |
| 20 MHz to 100 MHz | ±1% x ($1/F_{OUT_CCC}$) | ps |
| 100 MHz to 400 MHz | 150 | |
| **150 FC1152 Package**[1] | 0 < SSO ≤ 16 | |
| 20 MHz to 100 MHz | ±1% x ($1/F_{OUT_CCC}$)) | ps |
| 100 MHz to 400 MHz | 120 | ps |

1 SSO data is based on LVCMOS 2.5V MSIO and/or MSIOD bank I/Os.


© 2026 Microchip Technology Inc. and its subsidiaries

## 3.22 JTAG

**TABLE 3-259: JTAG 1532 FOR 005, 010, 025, AND 050 DEVICES**

| Parameter | Symbol | 005 | | 010 | | 025 | | 050 | | Unit |
|---|---|---|---|---|---|---|---|---|---|---|
| | | –1 | –Std | –1 | –Std | –1 | –Std | –1 | –Std | |
| Clock to Q (data out) | $T_{TCK2Q}$ | 7.47 | 8.79 | 7.73 | 9.09 | 7.75 | 9.12 | 7.89 | 9.28 | ns |
| Reset to Q (data out) | $T_{RSTB2Q}$ | 7.65 | 9 | 6.43 | 7.56 | 6.13 | 7.21 | 7.40 | 8.70 | ns |
| Test data input setup time | $T_{DISU}$ | –1.05 | –0.89 | –0.69 | –0.59 | –0.67 | –0.57 | –0.30 | –0.25 | ns |
| Test data input hold time | $T_{DIHD}$ | 2.38 | 2.8 | 2.38 | 2.8 | 2.42 | 2.85 | 2.09 | 2.45 | ns |
| Test mode select setup time | $T_{TMSSU}$ | –0.73 | –0.62 | –1.03 | –1.21 | –1.1 | –0.94 | 0.28 | 0.33 | ns |
| Test mode select hold time | $T_{TMDHD}$ | 1.36 | 1.6 | 1.43 | 1.68 | 1.93 | 2.27 | 0.16 | 0.19 | ns |
| ResetB removal time | $T_{TRSTREM}$ | –0.77 | –0.65 | –1.08 | –0.92 | –1.33 | –1.13 | –0.45 | –0.38 | ns |
| ResetB recovery time | $T_{TRSTREC}$ | –0.76 | –0.65 | –1.07 | –0.91 | –1.34 | –1.14 | –0.45 | –0.38 | ns |
| TCK maximum frequency | $F_{TCKMAX}$ | 25 | 21.25 | 25 | 21.25 | 25 | 21.25 | 25.00 | 21.25 | MHz |

**TABLE 3-260: JTAG 1532 FOR 060, 090, AND 150 DEVICES**

| Parameter | Symbol | 060 | | 090 | | 150 | | Unit |
|---|---|---|---|---|---|---|---|---|
| | | –1 | –Std | –1 | –Std | –1 | –Std | |
| Clock to Q (data out) | $T_{TCK2Q}$ | 8.38 | 9.86 | 8.96 | 10.54 | 8.66 | 10.19 | ns |
| Reset to Q (data out) | $T_{RSTB2Q}$ | 8.54 | 10.04 | 7.75 | 9.12 | 8.79 | 10.34 | ns |
| Test data input setup time | $T_{DISU}$ | –1.18 | –1 | –1.31 | –1.11 | –0.96 | –0.82 | ns |
| Test data input hold time | $T_{DIHD}$ | 2.52 | 2.97 | 2.68 | 3.15 | 2.57 | 3.02 | ns |
| Test mode select setup time | $T_{TMSSU}$ | –0.97 | –0.83 | –1.02 | –0.87 | –0.53 | –0.45 | ns |
| Test mode select hold time | $T_{TMDHD}$ | 1.7 | 2 | 1.67 | 1.96 | 1.02 | 1.2 | ns |
| ResetB removal time | $T_{TRSTREM}$ | –1.21 | –1.03 | –0.76 | –0.65 | –1.03 | –0.88 | ns |
| ResetB recovery time | $T_{TRSTREC}$ | –1.21 | –1.03 | –0.77 | –0.65 | –1.03 | –0.88 | ns |
| TCK maximum frequency | $F_{TCKMAX}$ | 25 | 21.25 | 25 | 21.25 | 25 | 21.25 | MHz |

**Note:** The JTAG IOs are LVCMOS/LVTTL IOs (TMS, TRSTB, TDI, TCK, and TDO). The JTAG IOs are powered by $V_{DDI}$ of the Bank they are located in.

## 3.23 System Controller SPI Characteristics

The following table lists the system controller characteristics in worst-case industrial conditions when $T_J$ = 100 °C and $V_{DD}$ = 1.14V. For timing parameter, see Figure 3-22.

**TABLE 3-261: SYSTEM CONTROLLER SPI CHARACTERISTICS FOR ALL DEVICES**

| Symbol | Description | Conditions | Min. | Typ. | Max. | Unit |
|---|---|---|---|---|---|---|
| sp1 | SC_SPI_SCK minimum period | — | 20 | — | — | ns |
| sp2 | SC_SPI_SCK minimum pulse width high | — | 10 | — | — | ns |
| sp3 | SC_SPI_SCK minimum pulse width low | — | 10 | — | — | ns |
| sp4[1] | SC_SPI_SCK, SC_SPI_SDO, SC_SPI_SS rise time (10%–90%) 1 | I/O configuration: LVTTL 3.3V–20 mA<br>AC loading: 35 pF<br>Test conditions: Typical voltage, 25 °C | — | 1.239 | — | ns |
| sp5[1] | SC_SPI_SCK, SC_SPI_SDO, SC_SPI_SS fall time (10%–90%) 1 | I/O configuration: LVTTL 3.3V–20 mA<br>AC loading: 35 pF<br>Test conditions: Typical voltage, 25 °C | — | 1.245 | — | ns |
| sp6 | SC_SPI_SDO setup time | — | (SC_SPI_LK _period/2)-14 | — | — | ns |
| sp7 | SC_SPI_SDO hold time | — | (SC_SPI_LK _period/2)-1 | — | — | ns |
| sp8 | SC_SPI_SDI setup time | — | 4 | — | — | ns |
| sp9 | SC_SPI_SDI hold time | — | 6 | — | — | ns |
| Delay on SC_SPI_SDO after SC_SPI_SS is de-asserted when using SPI slave programming.[2] | | | | | 265 | ns |

1 For specific Rise/Fall Times, board design considerations and detailed output buffer resistances, use the corresponding IBIS models located on the Microchip FPGA Products Group website:

For IGLOO 2: https://www.microchip.com/en-us/products/fpgas-and-plds/fpgas/igloo-2-fpgas#Documentation.

For SmartFusion 2: https://www.microchip.com/en-us/products/fpgas-and-plds/system-on-chip-fpgas/smartfusion-2-fpgas#Documentation

Use the supported I/O Configurations for the System Controller SPI in the following table.

2. SC_SPI_SDO becomes tri-stated after SC_SPI_SS is de-asserted.

**TABLE 3-262: SUPPORTED I/O CONFIGURATIONS FOR SYSTEM CONTROLLER SPI (FOR MSIO BANK ONLY)**

| Voltage Supply | I/O Drive Configuration | Unit |
|---|---|---|
| 3.3V | 20 | mA |
| 2.5V | 16 | mA |
| 1.8V | 12 | mA |
| 1.5V | 8 | mA |
| 1.2V | 4 | mA |


© 2026 Microchip Technology Inc. and its subsidiaries

## 3.24 Power-up to Functional Times

The following table lists power-up to functional times in worst-case industrial conditions when $T_J$ = 100 °C, $V_{DD}$ = 1.14V.

**TABLE 3-263: POWER-UP TO FUNCTIONAL TIMES WHEN MSS/HPMS IS USED**

| Symbol | From | To | Description | Maximum Power-up to Functional Time (µS) | | | | | | |
|---|---|---|---|---|---|---|---|---|---|---|
| | | | | 005 | 010 | 025 | 050 | 060 | 090 | 150 |
| $T_{POR2OUT}$ | POWER_ON_RESET_N | Output available at I/O | Fabric to output | 647 | 500 | 531 | 483 | 474 | 524 | 647 |
| $T_{POR2MSSRST}$ | POWER_ON_RESET_N | MSS_RESET_N_M2F | Fabric to MSS | 644 | 497 | 528 | 480 | 468 | 518 | 641 |
| $T_{MSSRST2OUT}$ | MSS_RESET_N_M2F | Output available at I/O | MSS to output | 3.6 | 3.6 | 3.6 | 3.4 | 4.9 | 4.8 | 4.8 |
| $T_{VDD2OUT}$ | $V_{DD}$ | Output available at I/O | $V_{DD}$ at its minimum threshold level to output | 3096 | 2975 | 3012 | 2959 | 2869 | 2992 | 3225 |
| $T_{VDD2POR}$ | $V_{DD}$ | POWER_ON_RESET_N | $V_{DD}$ at its minimum threshold level to fabric | 2476 | 2487 | 2496 | 2486 | 2406 | 2563 | 2602 |
| $T_{VDD2MSSRST}$ | $V_{DD}$ | MSS_RESET_N_M2F | $V_{DD}$ at its minimum threshold level to MSS | 3093 | 2972 | 3008 | 2956 | 2864 | 2987 | 3220 |
| $T_{VDD2WPU}$ | DEVRST_N | DDRIO Inbuf weak pull | DEVRST_N to Inbuf weak pull | 2500 | 2487 | 2509 | 2475 | 2507 | 2519 | 2617 |
| | DEVRST_N | MSIO Inbuf weak pull | DEVRST_N to Inbuf weak pull | 2504 | 2491 | 2510 | 2478 | 2517 | 2525 | 2620 |
| | DEVRST_N | MSIOD Inbuf weak pull | DEVRST_N to Inbuf weak pull | 2479 | 2468 | 2493 | 2458 | 2486 | 2499 | 2595 |

**Note:** For more information about power-up times, see *UG0331: SmartFusion2 Microcontroller Subsystem User Guide* and *UG0448: IGLOO2 FPGA High Performance Memory Subsystem User Guide*.

**FIGURE 3-17: POWER-UP TO FUNCTIONAL TIMING DIAGRAM FOR SMARTFUSION 2**

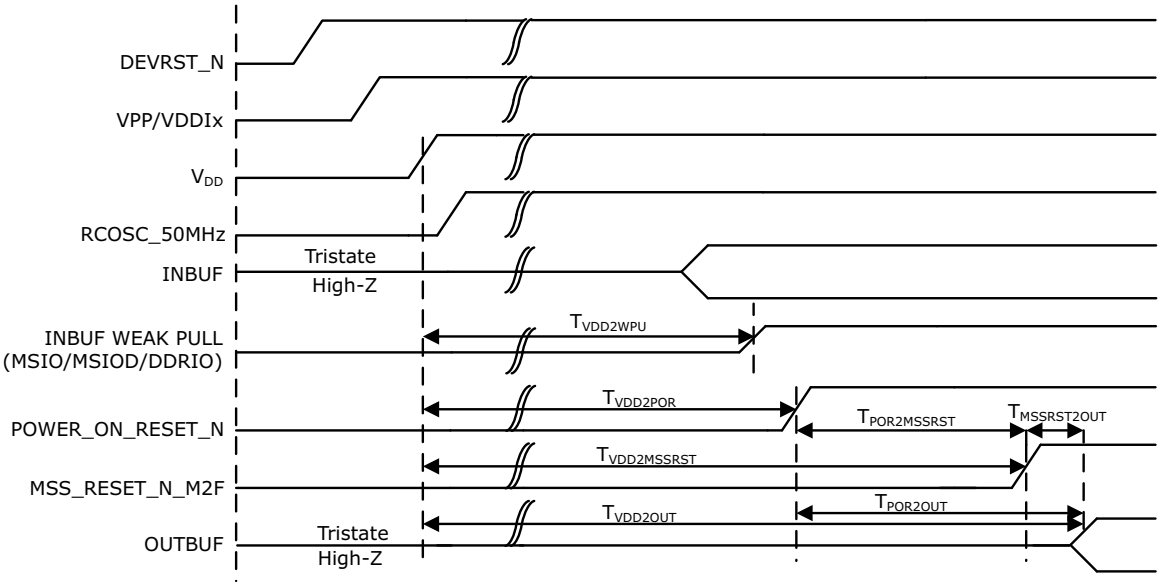


The following table lists power-up to functional times in worst-case industrial conditions when $T_J$ = 100 °C and $V_{DD}$ = 1.14V.

**TABLE 3-264: POWER-UP TO FUNCTIONAL TIMES WHEN MSS/HPMS IS NOT USED**

| Symbol | From | To | Description | Maximum Power-up to Functional Time (µS) | | | | | | |
|---|---|---|---|---|---|---|---|---|---|---|
| | | | | 005 | 010 | 025 | 050 | 060 | 090 | 150 |
| $T_{POR2OUT}$ | POWER_ON_RESET_N | Output available at I/O | Fabric to output | 114 | 114 | 114 | 113 | 114 | 114 | 114 |
| $T_{VDD2OUT}$ | $V_{DD}$ | Output available at I/O | $V_{DD}$ at its minimum threshold level to output | 2587 | 2600 | 2607 | 2558 | 2591 | 2600 | 2699 |
| $T_{VDD2POR}$ | $V_{DD}$ | POWER_ON_RESET_N | $V_{DD}$ at its minimum threshold level to fabric | 2474 | 2486 | 2493 | 2445 | 2477 | 2486 | 2585 |
| $T_{VDD2WPU}$ | DEVRST_N | DDRIO Inbuf weak pull | DEVRST_N to Inbuf weak pull | 2500 | 2487 | 2509 | 2475 | 2507 | 2519 | 2617 |
| | DEVRST_N | MSIO Inbuf weak pull | DEVRST_N to Inbuf weak pull | 2504 | 2491 | 2510 | 2478 | 2517 | 2525 | 2620 |
| | DEVRST_N | MSIOD Inbuf weak pull | DEVRST_N to Inbuf weak pull | 2479 | 2468 | 2493 | 2458 | 2486 | 2499 | 2595 |

**Note:** For more information about power-up times, see *UG0448: IGLOO2 FPGA High Performance Memory Subsystem User Guide* and *UG0331: SmartFusion2 Microcontroller Subsystem User Guide*.


© 2026 Microchip Technology Inc. and its subsidiaries

**FIGURE 3-18: POWER-UP TO FUNCTIONAL TIMING DIAGRAM FOR IGLOO 2**

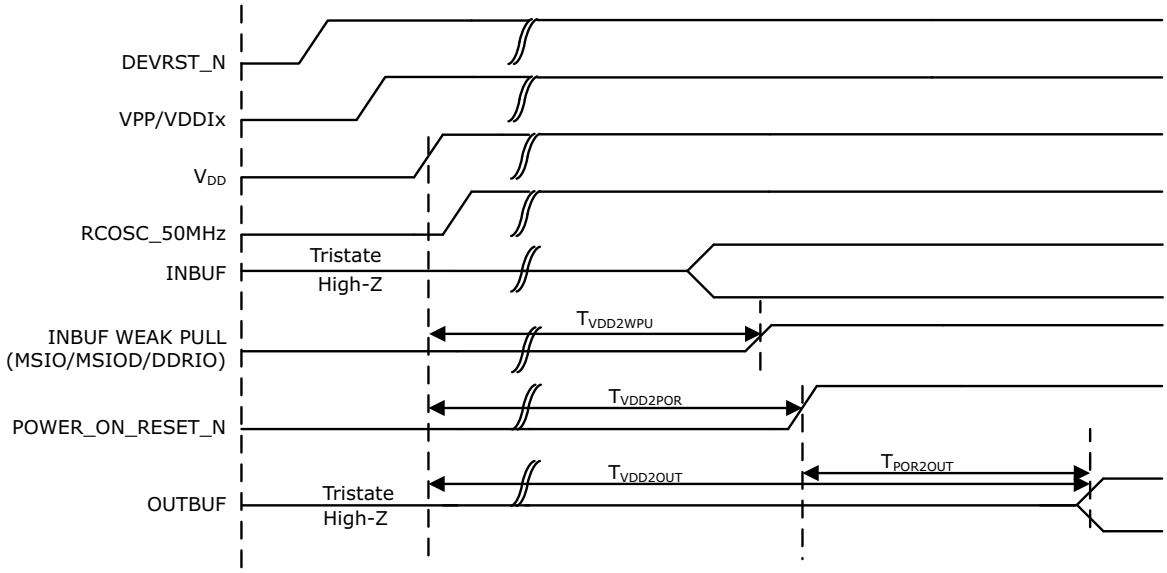


## 3.25 DEVRST_N Characteristics

**TABLE 3-265: DEVRST_N CHARACTERISTICS FOR ALL DEVICES**

| Parameter | Symbol | Min. | Typ. | Max. | Unit |
|---|---|---|---|---|---|
| TRAMPDEVRSTN | DEVRST_N ramp time (10% to 90%) | — | — | 1 | µs |
| FMAXPDEVRSTN | DEVRST_N cycling rate | — | — | 100 | kHz |
| MPWDEVRSTN | DEVRST_N pulse width | 1 | — | — | µs |

**TABLE 3-266: DEVICE RESET PIN TYPES AND DESCRIPTIONS**

| Pin | Type | Description | Unused Conditions |
|---|---|---|---|
| **Device Reset I/Os** | | | |
| DEVRST_N | Input | Device reset; active low and powered by $V_{PP}$. It is an asynchronous signal and Schmitt trigger input with the maximum slew rate must not exceed 1 µs. When DEVRST_N is asserted, all user IOs are fully tri-stated. In unused condition, pull up to $V_{PP}$ through 10 k resistor. Use the 3.3V I/O standards specification. Any of the 3.3V I/O standards, for example, LVTTL/LVCMOS is applicable for DEVRST. | Pull-up to $V_{PP}$ through a 10 k resistor. |

## 3.26 DEVRST_N to Functional Times

The following table lists the DEVRST_N to functional times in worst-case industrial conditions when $T_J$ = 100 °C and $V_{DD}$ = 1.14V.

**TABLE 3-267: DEVRST_N TO FUNCTIONAL TIMES WHEN MSS/HPMS IS USED**

| Symbol | From | To | Description | Maximum Power-Up to Functional Time (uS) | | | | | | |
|---|---|---|---|---|---|---|---|---|---|---|
| | | | | 005 | 010 | 025 | 050 | 060 | 090 | 150 |
| $T_{POR2OUT}$ | POWER_ON_RESET_N | Output available at I/O | Fabric to output | 518 | 501 | 527 | 521 | 422 | 419 | 694 |
| $T_{POR2MSSRST}$ | POWER_ON_RESET_N | MSS_RESET_N_M2F | Fabric to MSS | 515 | 497 | 524 | 518 | 417 | 414 | 689 |
| $T_{MSSRST2OUT}$ | MSS_RESET_N_M2F | Output available at I/O | MSS to output | 3.5 | 3.5 | 3.5 | 3.3 | 4.8 | 4.8 | 4.8 |
| $T_{DEVRST2OUT}$ | DEVRST_N | Output available at I/O | $V_{DD}$ at its minimum threshold level to output | 706 | 768 | 715 | 691 | 641 | 635 | 871 |
| $T_{DEVRST2POR}$ | DEVRST_N | POWER_ON_RESET_N | $V_{DD}$ at its minimum threshold level to fabric | 233 | 289 | 216 | 213 | 237 | 234 | 219 |
| $T_{DEVRST2MSSRST}$ | DEVRST_N | MSS_RESET_N_M2F | $V_{DD}$ at its minimum threshold level to MSS | 702 | 765 | 712 | 688 | 636 | 630 | 866 |
| $T_{DEVRST2WPU}$ | DEVRST_N | DDRIO Inbuf weak pull | DEVRST_N to Inbuf weak pull | 208 | 202 | 197 | 193 | 216 | 215 | 215 |
| | DEVRST_N | MSIO Inbuf weak pull | DEVRST_N to Inbuf weak pull | 208 | 202 | 197 | 193 | 216 | 215 | 215 |
| | DEVRST_N | MSIOD Inbuf weak pull | DEVRST_N to Inbuf weak pull | 208 | 202 | 197 | 193 | 216 | 215 | 215 |


© 2026 Microchip Technology Inc. and its subsidiaries

**FIGURE 3-19: DEVRST_N TO FUNCTIONAL TIMING DIAGRAM FOR SMARTFUSION 2**

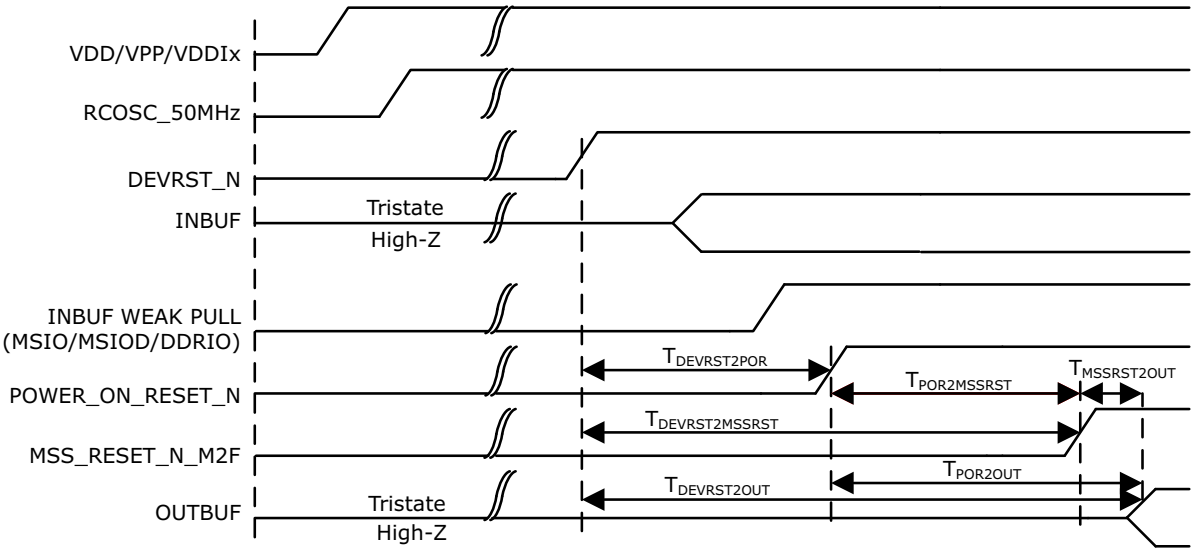


**FIGURE 3-20: DEVRST_N TO FUNCTIONAL TIMING DIAGRAM FOR IGLOO 2**

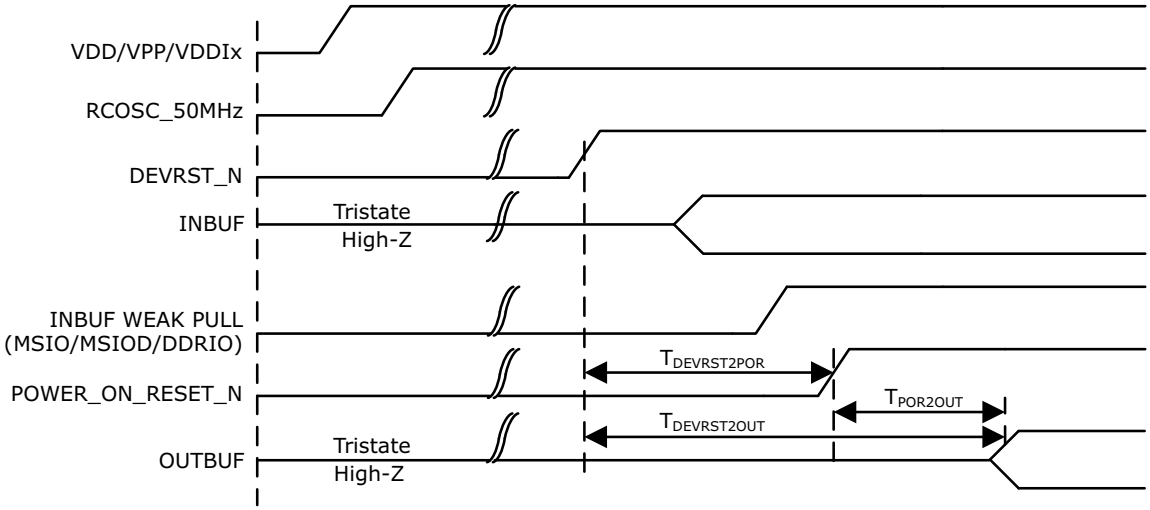


The following table lists the DEVRST_N to functional times in worst-case industrial conditions when $T_J$ = 100 °C and $V_{DD}$ = 1.14V.

**TABLE 3-268: DEVRST_N TO FUNCTIONAL TIMES WHEN MSS/HPMS IS NOT USED**

| Symbol | From | To | Description | Maximum Power-up to Functional Time (uS) | | | | | | |
|---|---|---|---|---|---|---|---|---|---|---|
| | | | | 005 | 010 | 025 | 050 | 060 | 090 | 150 |
| $T_{POR2OUT}$ | POWER_ON_RSET_N | Output available at I/O | Fabric to output | 114 | 116 | 113 | 113 | 115 | 115 | 114 |

**TABLE 3-268: DEVRST_N TO FUNCTIONAL TIMES WHEN MSS/HPMS IS NOT USED**

| | | | | | | | | | | |
|---|---|---|---|---|---|---|---|---|---|---|
| $T_{DEVRST2OUT}$ | DEVRST_N | Output available at I/O | $V_{DD}$ at its minimum threshold level to output | 314 | 353 | 314 | 307 | 343 | 341 | 341 |
| $T_{DEVRST2POR}$ | DEVRST_N | POWER_ON_RESET_N | $V_{DD}$ at its minimum threshold level to fabric | 200 | 238 | 201 | 195 | 230 | 229 | 227 |
| $T_{DEVRST2WPU}$ | DEVRST_N | DDRIO Inbuf weak pull | DEVRST_N to Inbuf weak pull | 208 | 202 | 197 | 193 | 216 | 215 | 215 |
| | DEVRST_N | MSIO Inbuf weak pull | DEVRST_N to Inbuf weak pull | 208 | 202 | 197 | 193 | 216 | 215 | 215 |
| | DEVRST_N | MSIOD Inbuf weak pull | DEVRST_N to Inbuf weak pull | 208 | 202 | 197 | 193 | 216 | 215 | 215 |

## 3.27 Flash*Freeze Timing Characteristics

The following table lists the Flash*Freeze entry and exit times in worst-case industrial conditions when $T_J$ = 100 °C and $V_{DD}$ = 1.14V.

**TABLE 3-269: FLASH*FREEZE ENTRY AND EXIT TIMES**

| Parameter | Symbol | Entry/Exit Timing FCLK = 100 MHz | | Entry/Exit Timing FCLK = 3 MHz | Unit | Conditions |
|---|---|---|---|---|---|---|
| | | 005, 010, 025, 060, 090, and 150 | 050 | All Devices | | |
| Entry time | TFF_ENTRY | 160 | 150 | 320 | µs | eNVM and MSS/HPMS PLL = ON |
| | | 215 | 200 | 430 | µs | eNVM and MSS/HPMS PLL= OFF |
| Exit time with respect to the MSS PLL Lock | TFF_EXIT | 100 | 100 | 140 | µs | eNVM and MSS/HPMS PLL = ON during F*F |
| | | 136 | 120 | 190 | µs | eNVM = ON and MSS/HPMS PLL = OFF during F*F and MSS/HPMS PLL turned back on at exit |
| | | 200 | 200 | 285 | µs | eNVM and MSS/HPMS PLL = OFF during F*F and both are turned back on at exit |
| | | 200 | 200 | 285 | µs | eNVM = OFF and MSS/HPMS PLL = ON during F*F and eNVM turned back on at exit |
| Exit time with respect to the fabric PLL lock[1] | TFF_EXIT | 1.5 | 1.5 | 1.5 | ms | eNVM and MSS/HPMS PLL = ON during F*F |
| | | 1.5 | 1.5 | 1.5 | ms | eNVM and MSS/HPMS PLL = OFF during F*F and both are turned back on at exit |


© 2026 Microchip Technology Inc. and its subsidiaries

**TABLE 3-269: FLASH*FREEZE ENTRY AND EXIT TIMES (CONTINUED)**

| Parameter | Symbol | Entry/Exit Timing FCLK = 100 MHz | | Entry/Exit Timing FCLK = 3 MHz | Unit | Conditions |
|---|---|---|---|---|---|---|
| | | 005, 010, 025, 060, 090, and 150 | 050 | All Devices | | |
| Exit time with respect to the fabric buffer output | TFF_EXIT | 21 | 15 | 21 | µs | eNVM and MSS/HPMS PLL = ON during F*F |
| | | 65 | 55 | 65 | µs | eNVM and MSS/HPMS PLL = OFF during F*F and both are turned back on at exit |

1 PLL Lock Delay set to 1024 cycles (default).

## 3.28 DDR Memory Interface Characteristics

The following table lists the DDR memory interface characteristics in worst-case industrial conditions when $T_J$ = 100 °C and $V_{DD}$ = 1.14V.

**TABLE 3-270: DDR MEMORY INTERFACE CHARACTERISTICS**

| Standard | Supported Data Rate | | Unit |
|---|---|---|---|
| | Min. | Max. | |
| DDR3 | 667 | 667 | Mbps |
| DDR2 | 667 | 667 | Mbps |
| LPDDR | 50 | 400 | Mbps |

## 3.29 SFP Transceiver Characteristics

IGLOO 2 and SmartFusion 2 SerDes complies with Small Form-factor Pluggable (SFP) requirements as specified in SFP INF-80741. The following table lists the electrical characteristics.

The following table lists the SFP transceiver electrical characteristics in worst-case industrial conditions when $T_J$ = 100 °C and $V_{DD}$ = 1.14V.

**TABLE 3-271: SFP TRANSCEIVER ELECTRICAL CHARACTERISTICS**

| Pin | Direction | Differential Peak-Peak Voltage | | Unit |
|---|---|---|---|---|
| | | Min. | Max. | |
| RD±[1] | Output | 1600 | 2400 | mV |
| TD±[2] | Input | 350 | 2400 | mV |

1 Based on default SerDes transmitter settings for PCIe Gen1. Lower amplitudes are available through programming changes to TX_AMP setting.

2 Based on Input Voltage Common-Mode (VICM) = 0 V. Requires AC Coupling.

## 3.30 SerDes Electrical and Timing AC and DC Characteristics

PCIe is a high-speed, packet-based, point-to-point, low-pin-count, serial interconnect bus. The IGLOO 2 and SmartFusion 2 SoC FPGAs has up to four hard high-speed serial interface blocks. Each SerDes block contains a PCIe system block. The PCIe system is connected to the SerDes block.

The following table lists the transmitter parameters in worst-case industrial conditions when $T_J$ = 100 °C and $V_{DD}$ = 1.14V.

**TABLE 3-272: TRANSMITTER PARAMETERS**

| Symbol | Description | Min. | Max. | Unit |
|---|---|---|---|---|
| VTX-DIFF-PP | Differential swing (2.5 Gbps, 5.0 Gbps) | 0.8 | 1.2 | V |
| VTX-CM-AC-P | Output common mode voltage (2.5 Gbps) | — | 20 | mV |
| VTX-CM-AC-PP | Output common mode voltage (5.0 Gbps) | — | 100 | mV |
| VTX-RISE-FALL | Rise and fall time (20% to 80%, 2.5 Gbps) | 0.125 | — | UI |
| | Rise and fall time (20% to 80%, 5.0 Gbps) | 0.15 | — | UI |
| ZTX-DIFF-DC | Output impedance–differential | 80 | 120 | Ω |
| LTX-SKEW | Lane-to-lane TX skew within a SerDes block (2.5 Gbps) | — | 500 ps + 2 UI | ps |
| | Lane-to-lane TX skew within a SerDes block (5.0 Gbps) | — | 500 ps + 4 UI | ps |
| RLTX-DIFF | Return loss differential mode (2.5 Gbps) | –10 | — | dB |
| | Return loss differential mode (5.0 Gbps) 0.05 GHz to 1.25 GHz | –10 | — | dB |
| | 1.25 GHz to 2.5 GHz | –8 | — | dB |
| RLTX-CM | Return loss common mode (2.5 Gbps, 5.0 Gbps) | –6 | — | dB |
| TX-LOCK-RST | Transmit PLL lock time from reset | — | 10 | µs |
| VTX-AMP | 100 mV setting | 90 | 150 | mV |
| | 400 mV setting | 320 | 480 | mV |
| | 800 mV setting | 660 | 940 | mV |
| | 1200 mV setting | 950 | 1400 | mV |

The following table lists the receiver pa in worst-case industrial conditions when $T_J$ = 100 °C and $V_{DD}$ = 1.14V.

**TABLE 3-273: RECEIVER PARAMETERS**

| Symbol | Description | Min. | Typ. | Max. | Unit |
|---|---|---|---|---|---|
| VRX-IN-PP-CC | Differential input peak-to-peak sensitivity (2.5 Gbps) | 0.238 | — | 1.2 | V |
| | Differential input peak-to-peak sensitivity (2.5 Gbps, de-emphasized) | 0.219 | — | 1.2 | V |
| | Differential input peak-to-peak sensitivity (5.0 Gbps) | 0.300 | — | 1.2 | V |
| | Differential input peak-to-peak sensitivity (5.0 Gbps, de-emphasized) | 0.300 | — | 1.2 | V |
| VRX-CM-AC-P | Input common mode range (AC coupled) | — | — | 150 | mV |
| ZRX-DIFF-DC | Differential input termination | 80 | 100 | 120 | Ω |
| REXT | External calibration resistor | 1,188 | 1,200 | 1,212 | Ω |
| CDR-LOCK-RST | CDR relock time from reset | — | — | 15 | µs |
| RLRX-DIFF | Return loss differential mode (2.5 Gbps) | –10 | — | — | dB |
| | Return loss differential mode (5.0 Gbps) 0.05 GHz to 1.25 GHz | –10 | — | — | dB |
| | 1.25 GHz to 2.5 GHz | –8 | — | — | dB |
| RLRX-CM | Return loss common mode (2.5 Gbps, 5.0 Gbps) | –6 | — | — | dB |


© 2026 Microchip Technology Inc. and its subsidiaries

**TABLE 3-273: RECEIVER PARAMETERS (CONTINUED)**

| Symbol | Description | Min. | Typ. | Max. | Unit |
|---|---|---|---|---|---|
| RX-CID[1] | CID limit (set by 8B/10B coding, not the receiver PLL) | — | — | 200 | UI |
| VRX-IDLE-DET-DIFF-PP | Signal detect limit | 65 | — | 175 | mV |

1 AC-coupled, BER = $e^{-12}$.

**TABLE 3-274: SERDES PROTOCOL COMPLIANCE**

| Protocol | Maximum Data Rate (Gbps) | –1 | –Std |
|---|---|---|---|
| PCIe Gen 1 | 2.5 | Yes | Yes |
| PCIe Gen 2 | 5.0 | Yes | — |
| XAUI | 3.125 | Yes | — |
| Generic EPCS | 3.2 | Yes | — |
| Generic EPCS | 2.5 | Yes | Yes |

The following table lists the SerDes reference clock AC specifications in worst-case industrial conditions when $T_J$ = 100 °C and $V_{DD}$ = 1.14V.

**TABLE 3-275: SERDES REFERENCE CLOCK AC SPECIFICATIONS**

| Parameter | Symbol | Min. | Max. | Unit |
|---|---|---|---|---|
| Reference clock frequency | $F_{REFCLK}$ | 100 | 160 | MHz |
| Reference clock rise time | $T_{RISE}$ | 0.6 | 4 | V/ns |
| Reference clock fall time | $T_{FALL}$ | 0.6 | 4 | V/ns |
| Reference clock duty cycle | $T_{CYC}$ | 40 | 60 | % |
| Reference clock mismatch | $M_{MREFCLK}$ | –300 | 300 | ppm |
| Reference spread spectrum clock | SSCref | 0 | 5000 | ppm |

**TABLE 3-276: HCSL MINIMUM AND MAXIMUM DC INPUT LEVELS (APPLICABLE TO SERDES REFCLK ONLY)**

| Parameter | Symbol | Min. | Typ. | Max. | Unit |
|---|---|---|---|---|---|
| **Recommended DC Operating Conditions** | | | | | |
| Supply voltage | $V_{DDI}$ | 2.375 | 2.5 | 2.625 | V |
| **HCSL DC Input Voltage Specification** | | | | | |
| DC Input voltage | $V_I$ | 0 | — | 2.625 | V |
| **HCSL Differential Voltage Specification** | | | | | |
| Input common mode voltage | $V_{ICM}$ | 0.05 | — | 2.4 | V |
| Input differential voltage | $V_{IDIFF}$ | 100 | — | 1100 | mV |

**TABLE 3-277: HCSL MINIMUM AND MAXIMUM AC SWITCHING SPEEDS (APPLICABLE TO SERDES REFCLK ONLY)**

| Parameter | Symbol | Min. | Typ. | Max. | Unit |
|---|---|---|---|---|---|
| **HCSL AC Specifications** | | | | | |
| Maximum data rate (for MSIO I/O bank) | $F_{MAX}$ | — | — | 350 | Mbps |
| **HCSL Impedance Specifications** | | | | | |
| Termination resistance | Rt | — | 100 | — | Ω |

## 3.31 SmartFusion 2 Specifications

### 3.31.1 MSS CLOCK FREQUENCY

The following table lists the maximum frequency for MSS main clock in worst-case industrial conditions when $T_J$ = 100 °C and $V_{DD}$ = 1.14V.

**TABLE 3-278: MAXIMUM FREQUENCY FOR MSS MAIN CLOCK**

| Symbol | Description | –1 | –Std | Unit |
|---|---|---|---|---|
| M3_CLK | Maximum frequency for the MSS main clock | 166 | 142 | MHz |

### 3.31.2 SMARTFUSION 2 INTER-INTEGRATED CIRCUIT ($I^2C$) CHARACTERISTICS

This section describes the DC and switching of the $I^2C$ interface. Unless otherwise noted, all output characteristics given are for a 100 pF load on the pins. For timing parameter definitions, see Figure 3-21.

The following table lists the $I^2C$ characteristics in worst-case industrial conditions when $T_J$ = 100 °C and $V_{DD}$ = 1.14V.

**TABLE 3-279: $I^2C$ CHARACTERISTICS**

| Parameter | Symbol | Min. | Typ. | Max. | Unit | Conditions |
|---|---|---|---|---|---|---|
| Input low voltage | $V_{IL}$ | –0.3 | — | 0.8 | V | See Section 3.5.6, "Single-Ended I/O Standards" for more information. I/O standard used for illustration: MSIO bank–LVTTL 8 mA low drive. |
| Input high voltage | $V_{IH}$ | 2 | — | 3.45 | V | See Section 3.5.6, "Single-Ended I/O Standards" for more information. I/O standard used for illustration: MSIO bank–LVTTL 8 mA low drive. |
| Hysteresis of schmitt triggered inputs for $V_{DDI}$ > 2V | $V_{HYS}$ | 0.05 × $V_{DDI}$ | — | | V | See Table 3-26 for more information. |
| Input current high | $I_{IL}$ | — | — | 10 | µA | See Section 3.5.6, "Single-Ended I/O Standards" for more information. |
| Input current low | $I_{IH}$ | — | — | 10 | µA | See Section 3.5.6, "Single-Ended I/O Standards" for more information. |
| Input rise time | $T_{ir}$ | — | — | 1000 | ns | Standard mode |
| | | — | — | 300 | ns | Fast mode |
| Input fall time | $T_{if}$ | — | — | 300 | ns | Standard mode |
| | | — | — | 300 | ns | Fast mode |
| Maximum output voltage low (open drain) at 3 mA sink current for $V_{DDI}$ > 2V | $V_{OL}$ | — | — | 0.4 | V | See Section 3.5.6, "Single-Ended I/O Standards" for more information. I/O standard used for illustration: MSIO bank–LVTTL 8 mA low drive. |
| Pin capacitance | Cin | — | — | 10 | pF | $V_{IN}$ = 0, f = 1.0 MHz |
| Output fall time from VIHMin to VILMax[1] | $t_{OF}$[1] | — | 21.04 | — | ns | $V_{IHmin}$ to $V_{ILMax}$, CLOAD = 400 pF |
| | | — | 5.556 | — | ns | $V_{IHmin}$ to $V_{ILMax}$, CLOAD = 100 pF |
| Output rise time from VILMax to VIHMin[1] | $t_{OR}$[1] | — | 19.887 | — | ns | $V_{ILMax}$ to $V_{IHmin}$, CLOAD = 400 pF |
| | | — | 5.218 | — | ns | $V_{ILMax}$ to $V_{IHmin}$, CLOAD = 100 pF |
| Output buffer maximum pull-down resistance[2, 3] | $R_{pull-up}$[2, 3] | — | — | 50 | Ω | — |
| Output buffer maximum pull-up resistance[2, 4] | $R_{pull-down}$[2, 4] | | — | 131.25 | Ω | — |
| Maximum data rate | $D_{MAX}$ | — | — | 400 | Kbps | Fast mode |
| | | — | — | 100 | Kbps | Standard mode |


© 2026 Microchip Technology Inc. and its subsidiaries

**TABLE 3-279: I²C CHARACTERISTICS (CONTINUED)**

| Parameter | Symbol | Min. | Typ. | Max. | Unit | Conditions |
|---|---|---|---|---|---|---|
| Pulse width of spikes which must be suppressed by the input filter | $T_{FILT}$ | — | 50 | — | ns | Fast mode |

1 These values are provided for MSIO Bank–LVTTL 8 mA Low Drive at 25 °C, typical conditions. For board design considerations and detailed output buffer resistances, use the corresponding IBIS models located on the SoC Products Group website:

For IGLOO 2: https://www.microchip.com/en-us/products/fpgas-and-plds/fpgas/igloo-2-fpgas#Documentation.

For SmartFusion 2: https://www.microchip.com/en-us/products/fpgas-and-plds/system-on-chip-fpgas/smartfusion-2-fpgas#Documentation.

2 These maximum values are provided for information only. Minimum output buffer resistance values depend on $V_{DDIx}$, drive strength selection, temperature, and process. For board design considerations and detailed output buffer resistances, use the corresponding IBIS models located on the SoC Products Group website:

For IGLOO 2: https://www.microchip.com/en-us/products/fpgas-and-plds/fpgas/igloo-2-fpgas#Documentation.

For SmartFusion 2: https://www.microchip.com/en-us/products/fpgas-and-plds/system-on-chip-fpgas/smartfusion-2-fpgas#Documentation.

3 R(PULL-DOWN-MAX) = (VOLspec)/IOLspec.

4 R(PULL-UP-MAX) = (VDDImax–VOHspec)/IOHspec.

The following table lists the I²C switching characteristics in worst-case industrial conditions when $T_J$ = 100 °C and $V_{DD}$ = 1.14V.

**TABLE 3-280: I²C SWITCHING CHARACTERISTICS**

| Parameter | Symbol | –1 | Std | Unit |
|---|---|---|---|---|
| | | Min. | Min. | |
| Low period of I2C_x_SCL | $T_{LOW}$ | 1 | 1 | PCLK cycles |
| High period of I2C_x_SCL | $T_{HIGH}$ | 1 | 1 | PCLK cycles |
| START hold time | $T_{HD;STA}$ | 1 | 1 | PCLK cycles |
| START setup time | $T_{SU;STA}$ | 1 | 1 | PCLK cycles |
| DATA hold time | $T_{HD;DAT}$ | 1 | 1 | PCLK cycles |
| DATA setup time | $T_{SU;DAT}$ | 1 | 1 | PCLK cycles |
| STOP setup time | $T_{SU;STO}$ | 1 | 1 | PCLK cycles |

**FIGURE 3-21: I²C TIMING PARAMETER DEFINITION**

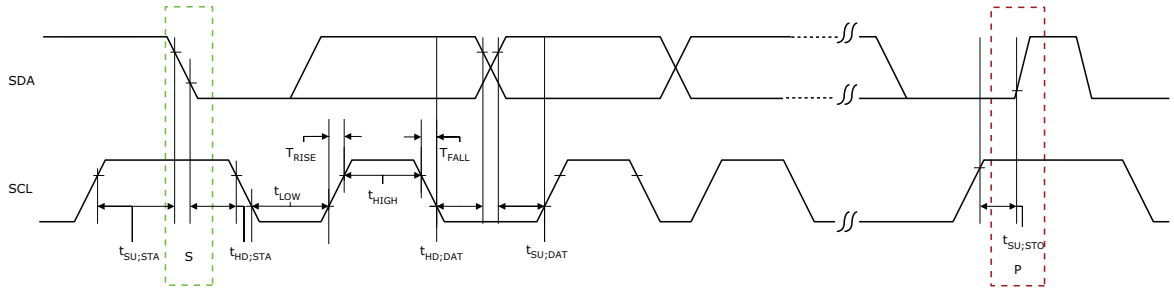


## 3.31.3 SERIAL PERIPHERAL INTERFACE (SPI) CHARACTERISTICS

This section describes the DC and switching of the SPI interface. Unless otherwise noted, all output characteristics given are for a 35 pF load on the pins and all sequential timing characteristics are related to SPI_x_CLK. For timing parameter definitions, see Figure 3-22.

The following table lists the SPI characteristics in worst-case industrial conditions when $T_J$ = 100 °C and $V_{DD}$ = 1.14V

**TABLE 3-281: SPI CHARACTERISTICS FOR ALL DEVICES**

| Symbol | Description | Min. | Typ. | Max. | Unit | Conditions |
|---|---|---|---|---|---|---|
| SPIFMAX | Maximum operating frequency of SPI interface | — | — | 20 | MHz | — |
| sp1 | SPI_[0\|1]_CLK minimum period | | | | | |
| | SPI_[0\|1]_CLK = PCLK/2 | 12 | — | — | ns | — |
| | SPI_[0\|1]_CLK = PCLK/4 | 24.1 | — | — | ns | — |
| | SPI_[0\|1]_CLK = PCLK/8 | 48.2 | — | — | ns | — |
| | SPI_[0\|1]_CLK = PCLK/16 | 0.1 | — | — | µs | — |
| | SPI_[0\|1]_CLK = PCLK/32 | 0.19 | — | — | µs | — |
| | SPI_[0\|1]_CLK = PCLK/64 | 0.39 | — | — | µs | — |
| | SPI_[0\|1]_CLK = PCLK/128 | 0.77 | — | — | µs | — |
| sp2 | SPI_[0\|1]_CLK minimum pulse width high | | | | | |
| | SPI_[0\|1]_CLK = PCLK/2 | 6 | — | — | ns | — |
| | SPI_[0\|1]_CLK = PCLK/4 | 12.05 | — | — | ns | — |
| | SPI_[0\|1]_CLK = PCLK/8 | 24.1 | — | — | ns | — |
| | SPI_[0\|1]_CLK = PCLK/16 | 0.05 | — | — | µs | — |
| | SPI_[0\|1]_CLK = PCLK/32 | 0.095 | — | — | µs | — |
| | SPI_[0\|1]_CLK = PCLK/64 | 0.195 | — | — | µs | — |
| | SPI_[0\|1]_CLK = PCLK/128 | 0.385 | — | — | µs | — |
| sp3 | SPI_[0\|1]_CLK minimum pulse width low | | | | | |
| | SPI_[0\|1]_CLK = PCLK/2 | 6 | — | — | ns | — |
| | SPI_[0\|1]_CLK = PCLK/4 | 12.05 | — | — | ns | — |
| | SPI_[0\|1]_CLK = PCLK/8 | 24.1 | — | — | ns | — |
| | SPI_[0\|1]_CLK = PCLK/16 | 0.05 | — | — | µs | — |
| | SPI_[0\|1]_CLK = PCLK/32 | 0.095 | — | — | µs | — |
| | SPI_[0\|1]_CLK = PCLK/64 | 0.195 | — | — | µs | — |
| | SPI_[0\|1]_CLK = PCLK/128 | 0.385 | — | — | µs | — |
| sp4 | SPI_[0\|1]_CLK, SPI_[0\|1]_DO, SPI_[0\|1]_SS rise time (10%–90%)[1] | — | 2.77 | — | ns | I/O Configuration: LVCMOS 2.5V–8 mA. AC loading: 35 pF Test conditions: Typical voltage, 25 °C. |
| sp5 | SPI_[0\|1]_CLK, SPI_[0\|1]_DO, SPI_[0\|1]_SS fall time (10%–90%)[1] | — | 2.906 | — | ns | IO Configuration: LVCMOS 2.5 V–8 mA. AC Loading: 35 pF Test Conditions: Typical Voltage, 25 °C. |
| SPI master configuration (applicable for 005, 010, 025, and 050 devices) | | | | | | |
| sp6m | SPI_[0\|1]_DO setup time[2] | (SPI_x_CLK_period/2) – 8.0 | — | — | ns | — |
| sp7m | SPI_[0\|1]_DO hold time[2] | (SPI_x_CLK_period/2) – 2.5 | — | — | ns | — |
| sp8m | SPI_[0\|1]_DI setup time[2] | 12 | — | — | ns | — |
| sp9m | SPI_[0\|1]_DI hold time[2] | 2.5 | — | — | ns | — |


© 2026 Microchip Technology Inc. and its subsidiaries

**TABLE 3-281: SPI CHARACTERISTICS FOR ALL DEVICES (CONTINUED)**

| Symbol | Description | Min. | Typ. | Max. | Unit | Conditions |
|---|---|---|---|---|---|---|
| SPI slave configuration (applicable for 005, 010, 025, and 050 devices) | | | | | | |
| sp6s | SPI_[0\|1]_DO setup time[2] | (SPI_x_CLK_period/2) – 17.0 | — | — | ns | — |
| sp7s | SPI_[0\|1]_DO hold time[2] | (SPI_x_CLK_period/2) + 3.0 | — | — | ns | — |
| sp8s | SPI_[0\|1]_DI setup time[2] | 2 | — | — | ns | — |
| sp9s | SPI_[0\|1]_DI hold time[2] | 7 | — | — | ns | — |
| SPI master configuration (applicable for 060, 090, and 150 devices) | | | | | | |
| sp6m | SPI_[0\|1]_DO setup time[2] | (SPI_x_CLK_period/2) – 7.0 | — | — | ns | — |
| sp7m | SPI_[0\|1]_DO hold time[2] | (SPI_x_CLK_period/2) – 9.5 | — | — | ns | — |
| sp8m | SPI_[0\|1]_DI setup time[2] | 15 | — | — | ns | — |
| sp9m | SPI_[0\|1]_DI hold time[2] | –2.5 | — | — | ns | — |
| SPI slave configuration (applicable for 060, 090, and 150 devices) | | | | | | |
| sp6s | SPI_[0\|1]_DO setup time[2] | (SPI_x_CLK_period/2) – 16.0 | — | | ns | — |
| sp7s | SPI_[0\|1]_DO hold time[2] | (SPI_x_CLK_period/2) - 3.5 | — | | ns | — |
| sp8s | SPI_[0\|1]_DI setup time[2] | 3 | — | | ns | — |
| sp9s | SPI_[0\|1]_DI hold time[2] | 2.5 | — | | ns | — |

1 For specific Rise/Fall Times board design considerations and detailed output buffer resistances, use the corresponding IBIS models located on the Microchip FPGA Products Group website:

For IGLOO 2: https://www.microchip.com/en-us/products/fpgas-and-plds/fpgas/igloo-2-fpgas#Documentation.

For SmartFusion 2: https://www.microchip.com/en-us/products/fpgas-and-plds/system-on-chip-fpgas/smartfusion-2-fpgas#Documentation.

2 For allowable pclk configurations, see Serial Peripheral Interface Controller section in the *UG0331: SmartFusion2 Microcontroller Subsystem User Guide*.

**FIGURE 3-22: SPI TIMING FOR A SINGLE FRAME TRANSFER IN MOTOROLA MODE (SPH = 1)**

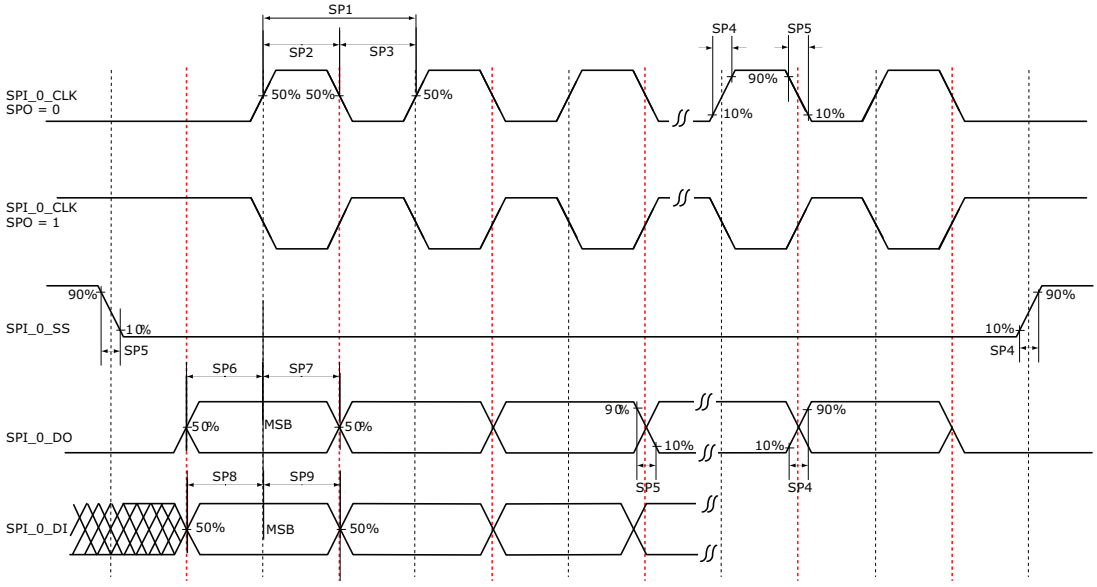

## 3.32 CAN Controller Characteristics

The following table lists the CAN controller characteristics in worst-case industrial conditions, when $T_J$ = 100 °C and $V_{DD}$ = 1.14V.

**TABLE 3-282: CAN CONTROLLER CHARACTERISTICS**

| Parameter | Description | –1 | –Std | Unit |
|---|---|---|---|---|
| FCANREFCLK[1] | Internally sourced CAN reference clock frequency | 160 | 136 | MHz |
| BAUDCANMAX | Maximum CAN performance baud rate | 1 | 1 | Mbps |
| BAUDCANMIN | Minimum CAN performance baud rate | 0.05 | 0.05 | Mbps |

1 PCLK to CAN controller must be a multiple of 8 MHz.

## 3.33 USB Characteristics

The following table lists the USB characteristics in worst-case industrial conditions, when $T_J$ = 100 °C and $V_{DD}$ = 1.14V.

**TABLE 3-283: USB CHARACTERISTICS**

| Parameter | Description | –1 | –Std | Unit |
|---|---|---|---|---|
| FUSBREFCLK | Internally sourced USB reference clock frequency | 166 | 142 | MHz |
| TUSBCLK | USB clock period | 16.66 | 16.66 | ns |
| TUSBPD | Clock to USB data propagation delay | 9.0 | 9.0 | ns |
| TUSBSU | Setup time for USB data | 6.0 | 6.0 | ns |
| TUSBHD | Hold time for USB data | 0 | 0 | ns |

## 3.34 MMUART Characteristics

The following table lists the MMUART characteristics in worst-case industrial conditions, when $T_J$ = 100 °C and $V_{DD}$ = 1.14V.

**TABLE 3-284: MMUART CHARACTERISTICS**

| Parameter | Description | –1 | –Std | Unit |
|---|---|---|---|---|
| FMMUART_REF_CLK | Internally sourced MMUART reference clock frequency. | 166 | 142 | MHz |
| BAUDMMUARTTx | Maximum transmit baud rate | 10.375 | 8.875 | Mbps |
| BAUDMMUARTRx | Maximum receive baud rate | 10.375 | 8.875 | Mbps |

## 3.35 IGLOO 2 Specifications

### 3.35.1 HPMS CLOCK FREQUENCY

The following table lists the maximum frequency for HPMS main clock in worst-case industrial conditions, when $T_J$ = 100 °C and $V_{DD}$ = 1.14V.

**TABLE 3-285: MAXIMUM FREQUENCY FOR HPMS MAIN CLOCK**

| Symbol | Description | –1 | –Std | Unit |
|---|---|---|---|---|
| HPMS_CLK | Maximum frequency for the HPMS main clock | 166 | 142 | MHz |

### 3.35.2 IGLOO 2 SERIAL PERIPHERAL INTERFACE (SPI) CHARACTERISTICS

This section describes the DC and switching of the SPI interface. Unless otherwise noted, all output characteristics given are for a 35 pF load on the pins and all sequential timing characteristics are related to SPI_0_CLK. For timing parameter definitions, see Figure 3-23.


© 2026 Microchip Technology Inc. and its subsidiaries

The following table lists the SPI characteristics in worst-case industrial conditions, when $T_J$ = 100 °C and $V_{DD}$ = 1.14V.

**TABLE 3-286: SPI CHARACTERISTICS FOR ALL DEVICES**

| Symbol | Description | Min. | Typ. | Max. | Unit | Conditions |
|---|---|---|---|---|---|---|
| SPIFMAX | Maximum operating frequency of SPI interface | — | — | 20 | MHz | — |
| sp1 | SPI_[0\|1]_CLK minimum period | | | | | |
| | SPI_[0\|1]_CLK = PCLK/2 | 12 | — | — | ns | — |
| | SPI_[0\|1]_CLK = PCLK/4 | 24.1 | — | — | ns | — |
| | SPI_[0\|1]_CLK = PCLK/8 | 48.2 | — | — | ns | — |
| | SPI_[0\|1]_CLK = PCLK/16 | 0.1 | — | — | µs | — |
| | SPI_[0\|1]_CLK = PCLK/32 | 0.19 | — | — | µs | — |
| | SPI_[0\|1]_CLK = PCLK/64 | 0.39 | — | — | µs | — |
| | SPI_[0\|1]_CLK = PCLK/128 | 0.77 | — | — | µs | — |
| sp2 | SPI_[0\|1]_CLK minimum pulse width high | | | | | |
| | SPI_[0\|1]_CLK = PCLK/2 | 6 | — | — | ns | — |
| | SPI_[0\|1]_CLK = PCLK/4 | 12.05 | — | — | ns | — |
| | SPI_[0\|1]_CLK = PCLK/8 | 24.1 | — | — | ns | — |
| | SPI_[0\|1]_CLK = PCLK/16 | 0.05 | — | — | µs | — |
| | SPI_[0\|1]_CLK = PCLK/32 | 0.095 | — | — | µs | — |
| | SPI_[0\|1]_CLK = PCLK/64 | 0.195 | — | — | µs | — |
| | SPI_[0\|1]_CLK = PCLK/128 | 0.385 | — | — | µs | — |
| sp3 | SPI_[0\|1]_CLK minimum pulse width low | | | | | |
| | SPI_[0\|1]_CLK = PCLK/2 | 6 | — | — | ns | — |
| | SPI_[0\|1]_CLK = PCLK/4 | 12.05 | — | — | ns | — |
| | SPI_[0\|1]_CLK = PCLK/8 | 24.1 | — | — | ns | — |
| | SPI_[0\|1]_CLK = PCLK/16 | 0.05 | — | — | µs | — |
| | SPI_[0\|1]_CLK = PCLK/32 | 0.095 | — | — | µs | — |
| | SPI_[0\|1]_CLK = PCLK/64 | 0.195 | — | — | µs | — |
| | SPI_[0\|1]_CLK = PCLK/128 | 0.385 | — | — | µs | — |
| sp4 | SPI_[0\|1]_CLK, SPI_[0\|1]_DO, SPI_[0\|1]_SS rise time (10%–90%)[1] | — | 2.77 | | ns | I/O Configuration: LVCMOS 2.5V - 8 mA. AC loading: 35 pF. test conditions: Typical voltage, 25 °C. |
| sp5 | SPI_[0\|1]_CLK, SPI_[0\|1]_DO, SPI_[0\|1]_SS fall time (10%–90%)[1] | — | 2.906 | | ns | I/O Configuration: LVCMOS 2.5V - 8 mA. AC loading: 35 pF. test conditions: Typical voltage, 25 °C. |
| SPI master configuration (applicable for 005, 010, 025, and 050 devices) | | | | | | |
| sp6m | SPI_[0\|1]_DO setup time[2] | (SPI_x_CLK_period/2) – 8.0 | — | — | ns | — |
| sp7m | SPI_[0\|1]_DO hold time[2] | (SPI_x_CLK_period/2) – 2.5 | — | — | ns | — |

**TABLE 3-286: SPI CHARACTERISTICS FOR ALL DEVICES (CONTINUED)**

| Symbol | Description | Min. | Typ. | Max. | Unit | Conditions |
|---|---|---|---|---|---|---|
| sp8m | SPI_[0\|1]_DI setup time[2] | 12 | — | — | ns | — |
| sp9m | SPI_[0\|1]_DI hold time[2] | 2.5 | — | — | ns | — |
| SPI slave configuration (applicable for 005, 010, 025, and 050 devices) | | | | | | |
| sp6s | SPI_[0\|1]_DO setup time[2] | (SPI_x_CLK_period/2) – 17.0 | — | — | ns | — |
| sp7s | SPI_[0\|1]_DO hold time[2] | (SPI_x_CLK_period/2) + 3.0 | — | — | ns | — |
| sp8s | SPI_[0\|1]_DI setup time[2] | 2 | — | — | ns | — |
| sp9s | SPI_[0\|1]_DI hold time[2] | 7 | — | — | ns | — |
| SPI master configuration (applicable for 060, 090, and 150 devices) | | | | | | |
| sp6m | SPI_[0\|1]_DO setup time[2] | (SPI_x_CLK_period/2) – 7.0 | — | — | ns | — |
| sp7m | SPI_[0\|1]_DO hold time[2] | (SPI_x_CLK_period/2) – 9.5 | — | — | ns | — |
| sp8m | SPI_[0\|1]_DI setup time[2] | 15 | — | — | ns | — |
| sp9m | SPI_[0\|1]_DI hold time[2] | –2.5 | — | — | ns | — |
| SPI slave configuration (applicable for 060, 090, and 150 devices) | | | | | | |
| sp6s | SPI_[0\|1]_DO setup time[2] | (SPI_x_CLK_period/2) – 16.0 | — | — | ns | — |
| sp7s | SPI_[0\|1]_DO hold time[2] | (SPI_x_CLK_period/2) – 3.5 | — | — | ns | — |
| sp8s | SPI_[0\|1]_DI setup time[2] | 3 | — | — | ns | — |
| sp9s | SPI_[0\|1]_DI hold time[2] | 2.5 | — | — | ns | — |

1 For specific Rise/Fall Times board design considerations and detailed output buffer resistances, use the corresponding IBIS models located on the Microchip SoC Products Group website:

For IGLOO 2: https://www.microchip.com/en-us/products/fpgas-and-plds/fpgas/igloo-2-fpgas#Documentation.

For SmartFusion 2: https://www.microchip.com/en-us/products/fpgas-and-plds/system-on-chip-fpgas/smartfusion-2-fpgas#Documentation.

2 For allowable pclk configurations, see the Serial Peripheral Interface Controller section in the *SmartFusion2 MicroController Subsystem User Guide*.

**FIGURE 3-23: SPI TIMING FOR A SINGLE FRAME TRANSFER IN MOTOROLA MODE (SPH = 1)**

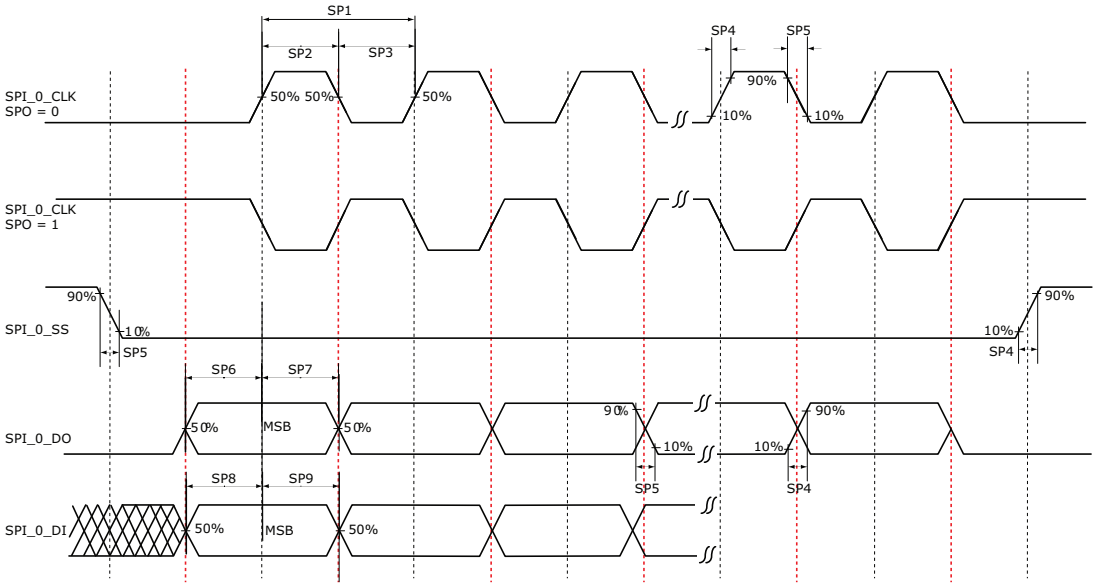



© 2026 Microchip Technology Inc. and its subsidiaries

# APPENDIX A: REVISION HISTORY

The revision history describes the changes that were implemented in the document. The changes are listed by revision, starting with the current publication.

## A.1 Revision F—05/2026

In the revision F of this document, the Table 3-3 was updated by inserting a note to point out that SmartFusion 2 and IGLOO 2 FPGA Retention Calculator can be obtained through Secure Document Extranet (SDE).

## A.2 Revision E—12/2024

In the revision E of this document, the Table 3-2 was updated inserting a note to assert that the product is designed and validated for operation within the junction temperature (TJ) range.

## A.3 Revision D—12/2023

In the revision D of this document, the "INTRODUCTION" section was updated by adding part numbers with prefixes for IGLOO 2 and SmartFusion 2.

## A.4 Revision C—11/2023

The following is a summary of the changes in revision C of this document.

- Updated the minimum timing values of SP6-SP9 in Table 3-261.
- Added “DEVRST_N pulse width” details to DEVRST_N Characteristics in Table 3-265.
- Removed bank numbers for FDDR and MDDR Reference voltage supply in Table 3-2.

## A.5 Revision B

The following is a summary of the changes in revision B of this document.

- Updated Table 3-7 by adding FCS158 related information.
- Updated the information against Access time with feed-through write timing in Table 3-229 to Table 3-233. For more information about this change, see https://ww1.microchip.com/downloads/aemDocuments/documents/FPGA/can/CN_SF2_IGLOO2_FPGA_LSRAM_Write-Feedthrough_Timing.pdf

## A.6 Revision A

The following is a summary of the changes in revision A of this document.

- Updated the Data Sheet as per the latest Microchip publishing standards.
- Changed DS number from DS0128 to DS00004750A.
- Updated notes 2 and 3 of Table 3-3.
- Updated Flash*Freeze modes and configurations statuses in Table 3-8
- Corrected note 2 (FD-102) and added note 3 to Table 3-22.
- Updated Microchip links for information regarding IGLOO 2 and SmartFusion 2 products in Section 2.0, "References", Section 3.16, "SRAM PUF", Table 3-33, Table 3-42, Table 3-64,Table 3-77, Table 3-261, Table 3-279, Table 3-281, and Table 3-286.
- Added Microchip Tech Support web link in Section 3.1.3, "ESD Performance".
- Updated note of Table 3-242.
- Added note to Table 3-249.
- Added PLL_ARST_N value in Table 3-257.
- Modified 50 MHz and 1 MHz enable/disable details in Table 3-8.
- Merged and modified tables in Section 3.13, "Programming Times" (Table 3-242 addresses SAR 105131 and SAR 103074).
- Corrected Table 3-255.
- Added note 2 to Table 3-256.
- Added note to Table 3-260.

- Added Table 3-266.
- Provided value for delay on SC_SPI_SDO after SC_SPI_SS is de-asserted and added note 2 to Table 3-261 .
- Added reference to Figure 3-22 in Section 3.23, "System Controller SPI Characteristics".

## A.7 Revision 12.0

The following is a summary of the changes in revision 12.0 of this document.

- A note about SERDES_[01]_VDD supply was added to recommended operating conditions table. See Table 3-2.
- A note about $V_{ID}$ was added to LVDS DC differential voltage specification. See Table 3-161.
- Updated Table 3-261, Table 3-263, Table 3-264, Table 3-265, Table 3-267, and Table 3-268.
- Updated Table 3-273 with RX-CID details.

## A.8 Revision 11.0

The following is a summary of the changes in revision 11.0 of this document.

- Updated Table 3-22 with minimum and maximum values for input current low and high (SAR 73114 and 80314).
- Added Section , "The following table lists the SRAM PUF in worst-case industrial conditions when TJ = 100 °C and VDD = 1.14V." (SAR 73114 and 79517).
- Added 060 device in Table 3-257 (SAR 79860).
- Added Section , "" (SAR 73114).
- Added Section 3.18, "Cryptographic Block Characteristics" (SAR 73114 and 79516).
- Updated Table 3-272 with VTX-AMP details (SAR 81756).
- Updated note in Table 3-273 SAR 74570 and 80677).
- Updated Table 3-274 with generic EPCS details (SAR 75307).
- Added Table 3-284 (SAR 50424).

## A.9 Revision 10.0

The following is a summary of the changes in revision 10.0 of this document.

- The Surge Current on VDD during DEVRST_B Assertion and Surge Current on VDD during Digest Check using System Services tables were deleted and added reference to *AC393: Board Design Guidelines for SmartFusion2 SoC and IGLOO2 FPGAs Application Note*. (SAR 76865 and 76623).
- Added 060 device in Table 3-2 (SAR 76383).
- Updated Table 3-22 for ramp time input (SAR 72103).
- Added 060 device details in Table 3-259 (SAR 74927).
- Updated Table 3-265 for name change (SAR 74925).
- Updated Table 3-258 for 060 FG676 Package details (SAR 78849).
- Updated Table 3-281 for SmartFusion2 and Table 3-286 for IGLOO2 for SPI timing and Fmax (SAR 56645, 75331).
- Updated Table 3-269 for Flash*Freeze entry and exit times (SAR 75329, 75330).
- Updated Table 3-273 or RX-CID information (SAR 78271).
- Added Table 3-6 and Figure 3-1 (SAR 78932).
- Updated Table 3-221 or timing characteristics and Table 3-222 (SAR 75998).
- Added Section 3.16, "SRAM PUF" (SAR 64406).
- Added a footnote on digest cycle in Table 3-3 (SAR 79812).

## A.10 Revision 9.0

The following is a summary of the changes in revision 9.0 of this document.

- Added a note in Table 3-3 (SAR 71506).
- Added a note in Table 3-4 (SAR 74616).
- Added a note in Figure 3-3 (SAR 71506).
- Updated Quiescent Supply Current for 060 in Table 3-9 and Table 3-10 (SAR 74483).


© 2026 Microchip Technology Inc. and its subsidiaries

- Updated programming currents for 060 in Table 3-11, Table 3-12, and Table 3-13.
- Added DEVRST_B assertion tables (SAR 74708).
- Updated I/O speeds for LVDS 3.3 V in Table 3-16 and Table 3-19 (SAR 69829).
- Updated Table 3-22 (SAR 69418).
- Updated Table 3-23, Table 3-24, and Table 3-25 (SAR 74570).
- Updated all AC/DC table to link to the Table 3-22 for reference (SAR 69418).
- Added Tables 3-244 and 3-245 (SAR 73971).
- Updated Section 3.30, "SerDes Electrical and Timing AC and DC Characteristics" (SAR 71171).
- Added Section 3.25, "DEVRST_N Characteristics" (SAR 64100, 72103).
- Added Table 3-274 (SAR 71897).
- Added 060 devices in Table 3-252, Table 3-253, and Table 3-254 (SAR 57898).
- Updated duty cycle parameter of crystal in Table 3-255 and Table 3-256 (SAR 57898).
- Added 32 KHz mode PLL acquisition time in Table 3-257 (SAR 68281).
- Updated Table 3-269 for 060 devices (SAR 57828).
- Updated Table 3-273 for CID value (SAR 70878).

## A.11 Revision 8.0

The following is a summary of the changes in revision 8.0 of this document.

- Updated Table 3-9 (SAR 69218).
- Updated Table 3-10 (SAR 69218).
- Updated Table 3-258 (SAR 69000).

## A.12 Revision 7.0

The following is a summary of the changes in revision 7.0 of this document.

- Updated Table 1-1 (SAR 68620).

## A.13 Revision 6.0

The following is a summary of the changes in revision 6.0 of this document.

- Updated Table 3-3 (SAR 65949).
- Updated Table 3-7 (SAR 62995).
- Updated Table 3-121 and Table 3-131 (SAR 67210).
- Added Section 3.15, "Embedded NVM (eNVM) Characteristics" (SAR 52509).
- Updated Table 3-252 (SAR 64855).
- Updated Table 3-257 (SAR 65958 and SAR 56666).
- Added Section 3.28, "DDR Memory Interface Characteristics" (SAR 66223).
- Added Section 3.29, "SFP Transceiver Characteristics" (SAR 63105).
- Updated Table 3-278 and Table 3-285 (SAR 66314).

## A.14 Revision 5.0

The following is a summary of the changes in revision 5.0 of this document.

- Updated Table 1-1.
- Updated Table 3-2 for $T_J$ symbol information.
- Updated Table 3-3 (SAR 63109).
- Updated Table 3-7.
- Updated Table 3-257 SAR 62012).
- Added Table 3-267 (SAR 64100).
- Added Table 3-282 and Table 3-283 (SAR 50424).

## A.15 Revision 4.0

The following is a summary of the changes in revision 4.0 of this document.

- Updated Table 1-1. Changed the Status of 090 devices to "Production" (SAR 62750).
- Updated Figure 3-10. Removed inverter bubble from DDR_IN latch (SAR 61418).
- Updated Section 3.30, "SerDes Electrical and Timing AC and DC Characteristics" (SAR 62836).

## A.16 Revision 3.0

In revision 3.0 of this document, the Theta B/C columns and FCS325 package was updated. For more information, see Table 3-7 (SAR 62002).

## A.17 Revision 2.0

The following is a summary of the changes in revision 2.0 of this document.

- Table 1-1 was updated (SAR 59056).
- Table 3-5 temperature and data retention information was updated SAR (61363).
- Storage Operating Table was updated and split into three tables—Table 3-3 and Table 3-5 (SAR 58725).
- Updated Theta B/C columns and FCS325 package in Table 3-7 (SAR 62002).
- Added 090-FCS325 thermal resistance to Table 3-7 (SAR 59384).
- TQ144 package was added to Table 3-7 (SAR 57708).
- Added PLL jitter data for the VF400 package (SAR 53162).
- Added Additional Worst Case IDD to Table 3-9 and Table 3-10 (SAR 59077).
- Table 3-11, Table 3-12, and Table 3-13 were added to verify Inrush currents (SAR 56348).
- Table 3-16 and Table 3-19—I/O speeds were replaced.
- Max speed was changed in Table 3-39 (SAR 57221) and in Table 3-50 (SAR 57113).
- Table 3-47–Table 3-55 were added.
- Added Cload to Table 3-87 (SAR 56238).
- Removed "Rs" information in DDR Timing Measurement Table 3-121, Table 3-131, and Table 3-142.
- Updated drive programming for M/B-LVDS outputs (SAR 58154).
- Added an inverter bubble to DDR_IN latch in Figure 3-10 (SAR 61418).
- QF waveform in Figure 3-11 was updated (SAR 59816).
- uSRAM Write Clock minimum values were updated in Table 3-235–Table 3-241 (SAR 55236).
- Fixed typo in the 32 kHz Crystal (XTAL) oscillator accuracy data section (SAR 59669).
- The Section 3.20, "On-Chip Oscillator" was split, and Section 3.15, "Embedded NVM (eNVM) Characteristics" was added.
- Table 3-252–Table 3-256 were revised.(SARs 57898 and 59669).
- PLL VCP Frequency and conditions were added to Table 3-257 (SAR 57416).
- Fixed typo for PLL jitter data in the 100 MHz-400 MHz range (SAR 60727).
- Updated FCCC information in Table 3-257 and Table 3-258 (SAR 60799).
- Device 025 specifications were added to Table 3-258 (SAR 51625).
- JTAG Table 3-259 was replaced (SAR 51188).
- Flash*Freeze Table 3-269 was replaced (SAR 57828).
- Added support for HCSL I/O Standard for SERDES reference clocks in Table 3-276 and Table 3-277 (SAR 50748).
- Tir and Tif parameters were added to Table 3-279 (SAR 52203).
- Speed grade consistency was fixed in tables throughout the datasheet (SAR 50722).
- Added jitter attenuation information (SAR 59405).

## A.18 Revision 1.0

The following is a summary of the changes in revision 1.0 of this document.

- The IGLOO2 v2 and the SmartFusion2 v5 datasheets are combined into this single product family datasheet.


© 2026 Microchip Technology Inc. and its subsidiaries

# Microchip Information

## Trademarks

The “Microchip” name and logo, the “M” logo, and other names, logos, and brands are registered and unregistered trademarks of Microchip Technology Incorporated or its affiliates and/or subsidiaries in the United States and/or other countries (“Microchip Trademarks”). Information regarding Microchip Trademarks can be found at https://www.microchip.com/en-us/about/legalinformation/microchip-trademarks.

ISBN:979-8-3371-3222-8

## Legal Notice

This publication and the information herein may be used only with Microchip products, including to design, test, and integrate Microchip products with your application. Use of this information in any other manner violates these terms. Information regarding device applications is provided only for your convenience and may be superseded by updates. It is your responsibility to ensure that your application meets with your specifications. Contact your local Microchip sales office for additional support or, obtain additional support at www.microchip.com/en-us/support/design-help/client-support-services.

THIS INFORMATION IS PROVIDED BY MICROCHIP "AS IS". MICROCHIP MAKES NO REPRESENTATIONS OR WARRANTIES OF ANY KIND WHETHER EXPRESS OR IMPLIED, WRITTEN OR ORAL, STATUTORY OR OTHERWISE, RELATED TO THE INFORMATION INCLUDING BUT NOT LIMITED TO ANY IMPLIED WARRANTIES OF NON-INFRINGEMENT, MERCHANTABILITY, AND FITNESS FOR A PARTICULAR PURPOSE, OR WARRANTIES RELATED TO ITS CONDITION, QUALITY, OR PERFORMANCE.

IN NO EVENT WILL MICROCHIP BE LIABLE FOR ANY INDIRECT, SPECIAL, PUNITIVE, INCIDENTAL, OR CONSEQUENTIAL LOSS, DAMAGE, COST, OR EXPENSE OF ANY KIND WHATSOEVER RELATED TO THE INFORMATION OR ITS USE, HOWEVER CAUSED, EVEN IF MICROCHIP HAS BEEN ADVISED OF THE POSSIBILITY OR THE DAMAGES ARE FORESEEABLE. TO THE FULLEST EXTENT ALLOWED BY LAW, MICROCHIP'S TOTAL LIABILITY ON ALL CLAIMS IN ANY WAY RELATED TO THE INFORMATION OR ITS USE WILL NOT EXCEED THE AMOUNT OF FEES, IF ANY, THAT YOU HAVE PAID DIRECTLY TO MICROCHIP FOR THE INFORMATION.

Use of Microchip devices in life support and/or safety applications is entirely at the buyer's risk, and the buyer agrees to defend, indemnify and hold harmless Microchip from any and all damages, claims, suits, or expenses resulting from such use. No licenses are conveyed, implicitly or otherwise, under any Microchip intellectual property rights unless otherwise stated.

## Microchip Devices Code Protection Feature

Note the following details of the code protection feature on Microchip products:

- Microchip products meet the specifications contained in their particular Microchip Data Sheet.
- Microchip believes that its family of products is secure when used in the intended manner, within operating specifications, and under normal conditions.
- Microchip values and aggressively protects its intellectual property rights. Attempts to breach the code protection features of Microchip product is strictly prohibited and may violate the Digital Millennium Copyright Act.
- Neither Microchip nor any other semiconductor manufacturer can guarantee the security of its code. Code protection does not mean that we are guaranteeing the product is “unbreakable”. Code protection is constantly evolving. Microchip is committed to continuously improving the code protection features of our products.

## Looking for pricing, stock, or lifecycle information?

Click below to explore more details on WIN SOURCE:

- View M2GL025-FG484 on WIN SOURCE
- Microchip Technology Information

## Optimize Your Supply Chain with WIN SOURCE Solutions

- Global Sourcing Solution
- Obsolete Management
- Cost Control Management
- Shortage Management
- Alternative Solution
- Excess Inventory Management