THE DATASHEET OF

MIC2282YMM-TR

www.win-source.net 0086-755-83957316

MIC2282

Single-Cell Ultra Low EMI Boost LED Driver

General Description

The MIC2282 is a boost LED driver optimized for single cell operation from alkaline, nickel-metal-hydride, or lithium ion batteries. The MIC2282 operates with an input voltage between 0.9V to 15V, driving a string of series LEDs up to 33V. The combination of a low feedback voltage of 220mV and an operating current of 120µA provides a high efficiency solution that prolongs battery life.

The MIC2282 requires only five external components (diode, inductor, sense resistor, input capacitor and output capacitor) to implement a low cost LED boost regulator. It is available in a compact 8-pin MSOP package with an operating range from –40°C to +125°.

Data sheets and support documentation can be found on Micrel's web site at: www.micrel.com.

Features

- Operates from a single-cell supply (V_{IN} = 0.9V to 15V)
- Ultra Low EMI
- 120µA typical quiescent current
- Adjustable output voltages
- 220mV sense voltage
- 20kHz switching frequency
- Over temperature protection
- 8-pin MSOP package
- Low component count solution

Applications

- LED flashlight and head lamps
- LCD bias generator
- Battery-powered, hand-held instruments
- Palmtop computers
- Remote controls
- Detectors

Typical Application

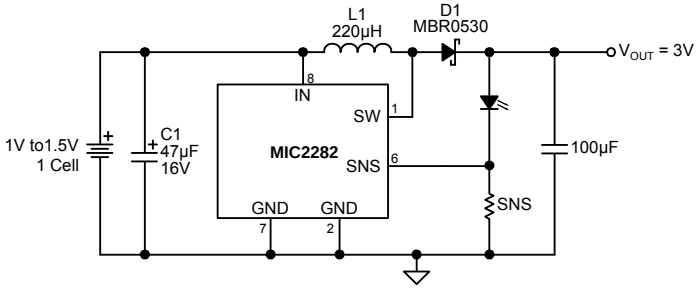

Single-Cell to 3V DC-to-DC Converter

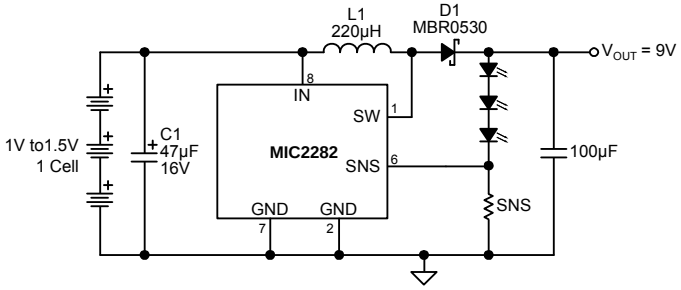

Triple-Cell to 9V DC-to-DC Converter

Ordering Information

Part Number	Marking Code	Output Voltage	Temperature Range	Package	Lead Finish
MIC2282YMM	2282	ADJ	–40° to +125°C	8-pin MSOP	Pb-Free

Pin Configuration

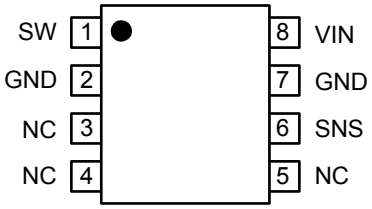

Top View
8-Pin MSOP (MM)

Pin Description

Pin Number	Pin Name	Pin Function
1	SW	Switch: NPN output switch collector.
2,7	GND	Power Ground: NPN output switch emitter.
3,4,5	NC	Not internally connected.
6	SNS	Sense (Input): Connect a sense resistor or external voltage divider network.
8	VIN	Supply (Input): Positive supply voltage input.

Absolute Maximum Ratings[1]

Supply Voltage (V_{IN})..... 18V
Switch Voltage (V_{SW})..... 36V
Storage Temperature (T_A)..... –65°C to +150°C
MSOP Power Dissipation (P_D)..... 250mW
ESD Rating[3]……..2KV

Operating Ratings[2]

Supply Voltage (V_{IN}) ..... +0.9V to +15V
Ambient Operating Temperature (T_A).... –40°C to +85°C
Junction Temperature (T_J)..... –40°C to +125°C
MSOP Thermal Resistance (θ_{JA})..... 160°C/W

Electrical Characteristics[4]

V_{IN} = 1.5V; T_A = 25°C, **bold** indicates –40°C ≤ T_J ≤ 125°C; unless noted

Parameter	Condition	Min	Typ	Max	Units
Supply Voltage Range	Startup guaranteed, I_{SW} = 100mA	0.9		15	V
Quiescent Current	Output switch off		120		µA
Sense Voltage	I_{SW} = 100mA	200	220	236	mV
Comparator Hysteresis			6		mV
Feedback Current	V_{SNS} = 0V		25		nA
Switch Saturation Voltage	V_{IN} = 1.0V, I_{SW} = 200mA V_{IN} = 1.2V, I_{SW} = 600mA V_{IN} = 1.5V, I_{SW} = 800mA		200 400 500		mV
Switch Leakage Crrent	Output switch off, V_{SW} = 36V		1		µA
Maximum Output Voltage			35		V
Switch On Time			35		µs
Current Limit	V_{IN} = 3.6V		1.1		A
Duty Cycle	V_{SNS} < 200mV, I_{SW} = 100mA		67		%

Notes:

1. Absolute maximum ratings indicate limits beyond which damage to the component may occur. Electrical specifications do not apply when operating the device outside of its operating ratings. The maximum allowable power dissipation is a function of the maximum junction temperature, $T_{J(MAX)}$, the junction-to-ambient thermal resistance, θ_{JA} , and the ambient temperature, T_A. The maximum allowable power dissipation will result in excessive die temperature, and the regulator will go into thermal shutdown.
2. The device is not guaranteed to function outside its operating rating.
3. Devices are ESD sensitive. Handling precautious recommended. Human body model, 1.5kΩ in series with 100pF.
4. Specification for packaged product only.

Typical Characteristics

1 LED Efficiency

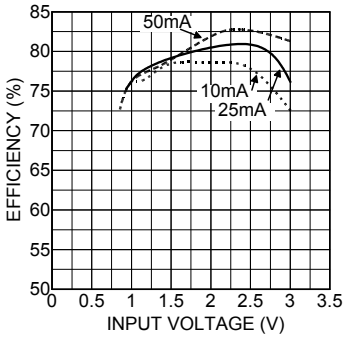

2 LED in Series Efficiency

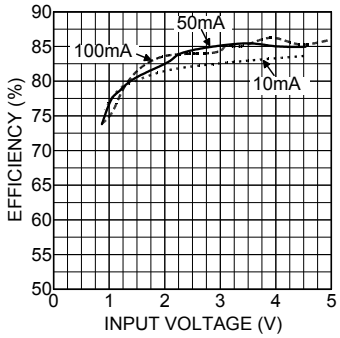

3 LED in Series Efficiency

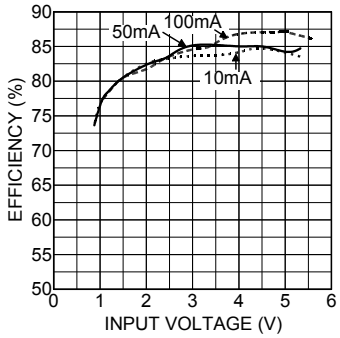

Oscillator Frequency vs. Temperature

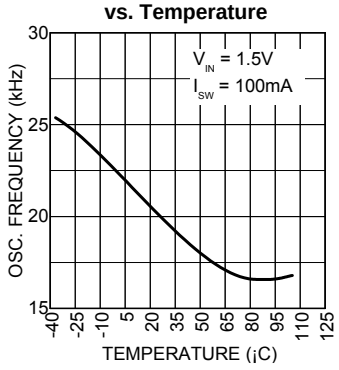

Oscillator Duty Cycle vs. Temperature

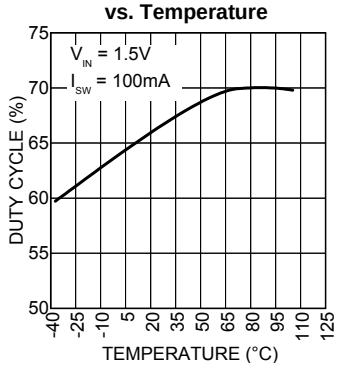

Quiescent Current vs. Temperature

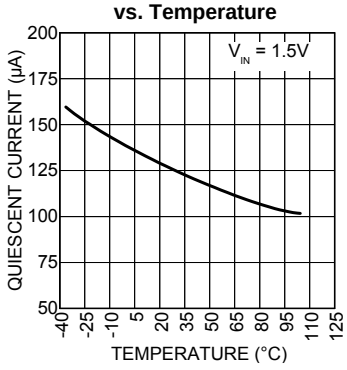

Quiescent Current vs. Supply Volage

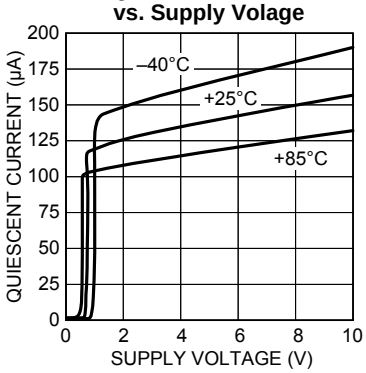

Current Limit vs. Input Voltage

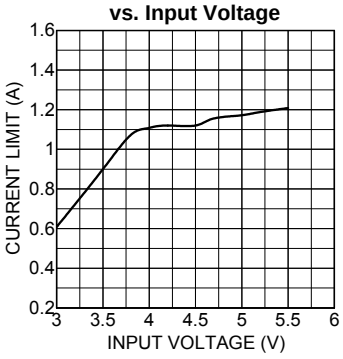

Output Current Limit vs. Temperature

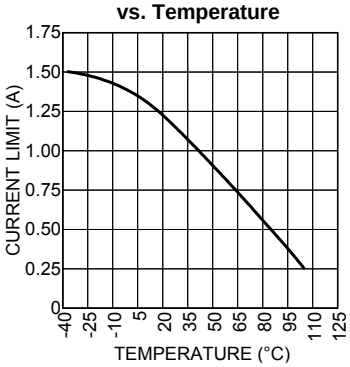

Functional Diagram

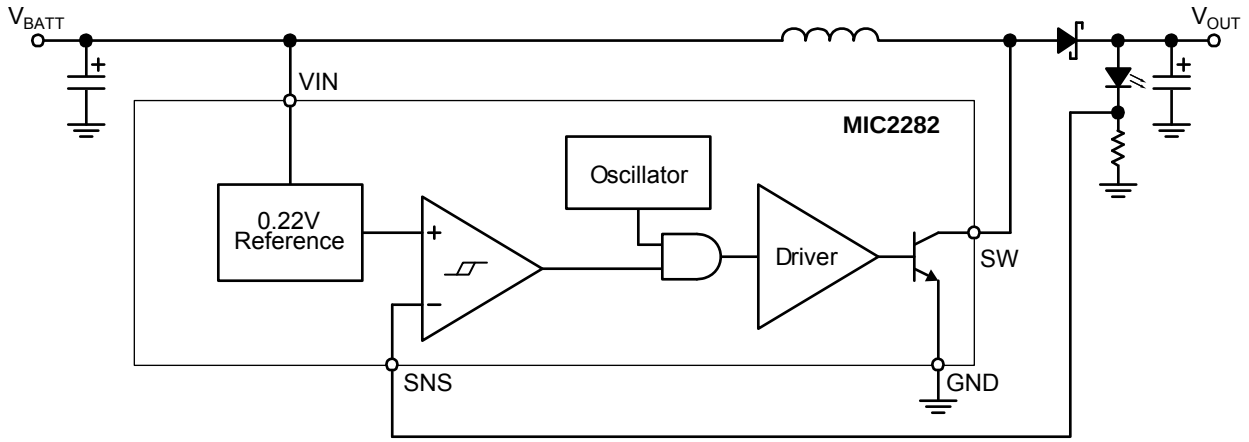

Adjustable Voltage with External Components

Functional Description

The MIC2282 boost LED driver has a gated oscillator architecture designed to operate from a single cell input voltage as low as 0.9V and provide a high-efficiency adjustable regulated output voltage. One advantage of this architecture is that the output switch is disabled whenever the output voltage is above the feedback comparator threshold thereby greatly reducing quiescent current and improving efficiency, especially at low output currents.

The comparator senses the output voltage through an external resistor and compares it to the internal reference voltage. When the voltage at the inverting input of the comparator is below 0.22V, the comparator output is high and the output of the oscillator is allowed to pass through the AND gate to the output driver and output switch. The output switch then turns on and off storing energy in the inductor. When the output switch is on (low) energy is stored in the inductor; when the switch is off (high) the stored energy is dumped into the output capacitor which causes the output voltage to rise.

When the output voltage is high enough to cause the comparator output to be low (inverting input voltage is above 0.22V) the AND gate is disabled and the output switch remains off (high). The output switch remains disabled until the output voltage falls low enough to cause the comparator output to go high.

Application Information

Oscillator Duty Cycle and Frequency

The oscillator duty cycle is set to 67% which is optimized to provide maximum load current for output voltages approximately 3 times larger than the input voltage. Other output voltages are also easily generated with a slight drop in efficiency. The fixed oscillator frequency is set to 20kHz.

Current Limit

Current limit for the MIC2282 functions by modifying the oscillator duty cycle and frequency. When current exceeds 1.1A, the duty cycle is reduced (switch on-time is reduced, off-time is unaffected) and the corresponding frequency is increased. In this way less time is available for the inductor current to build up while maintaining the same discharge time. The onset of current limit is soft rather than abrupt but sufficient to protect the inductor and output switch from damage. Certain combinations of input voltage, output voltage and load current can cause the inductor to go into a continuous mode of operation. This is what happens when the inductor current can not fall to zero and occurs when:

$$\text{duty cycle} \leq \frac{V_{OUT} + V_{DIODE} - V_{IN}}{V_{OUT} + V_{DIODE} - V_{SAT}}$$

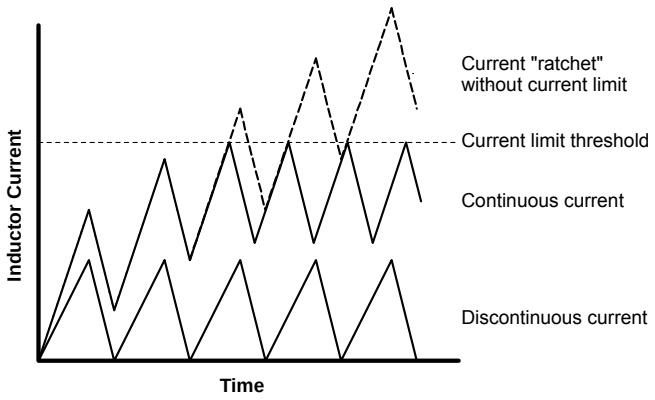

Figure 1. Current Limit Behavior

Figure 1 shows an example of inductor current in the continuous mode with its associated change in oscillator frequency and duty cycle. This situation is most likely to occur with relatively small inductor values, large input voltage variations and output voltages which are less than ~3× the input voltage. Selection of an inductor with a saturation threshold above 1.1A will insure that the system can withstand these conditions.

Inductors, Capacitors and Diodes

The importance of choosing correct inductors, capacitors and diodes can not be ignored. Poor choices for these components can cause problems as severe as circuit failure or as subtle as poorer than expected efficiency.

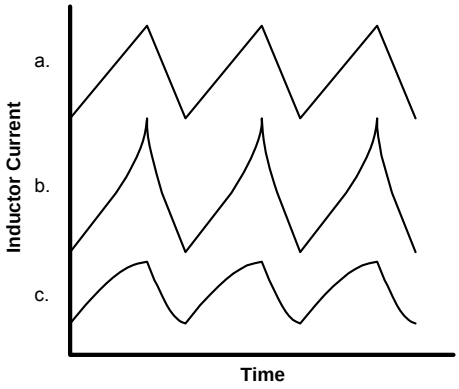

Figure 2. Inductor Current: a. Normal, b. Saturating and c. Excessive ESR

Inductors

Inductors must be selected such that they do not saturate under maximum current conditions. When an inductor saturates, its effective inductance decreases rapidly and the current can suddenly jump to very high values.

Figure 2 compares inductors with currents that are correct and unacceptable due to core saturation. The inductors have the same nominal inductance but Figure 2b has a lower saturation threshold. Another consideration in the selection of inductors is the radiated energy. In general, toroids have the best radiation characteristics while bobbins have the worst. Some bobbins have caps or enclosures which significantly reduce stray radiation.

The last electrical characteristic of the inductor that must be considered is ESR (equivalent series resistance). Figure 2c shows the current waveform when ESR is excessive. The normal symptom of excessive ESR is reduced power transfer efficiency. Note that inductor ESR can be used to the designers advantage as reverse battery protection (current limit) for the case of relatively low output power one-cell designs. The potential for very large and destructive currents exits if a battery in a one-cell application is inserted backwards into the circuit. In some applications it is possible to limit the current to a nondestructive (but still battery draining) level by choosing a relatively high inductor ESR value which does not affect normal circuit performance.

Capacitors

It is important to select high-quality, low ESR, filter capacitors for the output of the regulator circuit. High ESR in the output capacitor causes excessive ripple due to the voltage drop across the ESR. A triangular current pulse with a peak of 500mA into a 200mΩ ESR can cause 100mV of ripple at the output due the capacitor only. Acceptable values of ESR are typically in the 50mΩ range. Inexpensive aluminum electrolytic capacitors usually are the worst choice while tantalum capacitors are typically better. Figure 4 demonstrates the effect of capacitor ESR on output ripple voltage.

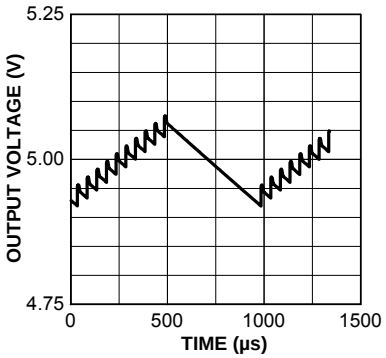

Figure 3. Output Ripple

Output Diode

Finally, the output diode must be selected to have adequate reverse breakdown voltage and low forward voltage at the application current. Schottky diodes typically meet these requirements.

Standard silicon diodes have forward voltages which are too large except in extremely low power applications.

They can also be very slow, especially those suited to power rectification such as the 1N400x series, which affects efficiency.

Inductor Behavior

The inductor is an energy storage and transfer device. Its behavior (neglecting series resistance) is described by the following equation:

$$I = \frac{V}{L} \times t$$

where:

V = inductor voltage (V)

L = inductor value (H)

t = time (s)

I = inductor current (A)

If a voltage is applied across an inductor (initial current is zero) for a known time, the current flowing through the inductor is a linear ramp starting at zero, reaching a maximum value at the end of the period. When the output switch is on, the voltage across the inductor is:

$$V_1 = V_{IN} - V_{SAT}$$

When the output switch turns off, the voltage across the inductor changes sign and flies high in an attempt to maintain a constant current. The inductor voltage will eventually be clamped to a diode drop above V_{OUT}. Therefore, when the output switch is off, the voltage across the inductor is:

$$V_2 = V_{OUT} + V_{DIODE} - V_{IN}$$

For normal operation the inductor current is a triangular waveform which returns to zero current (discontinuous mode) at each cycle. At the threshold between continuous and discontinuous operation we can use the fact that $I_1 = I_2$ to get:

$$V_1 \times t_1 = V_2 \times t_2$$

$$\frac{V_1}{V_2} = \frac{t_2}{t_1}$$

This relationship is useful for finding the desired oscillator duty cycle based on input and output voltages. Since input voltages typically vary widely over the life of the battery, care must be taken to consider the worst case voltage for each parameter. For example, the worst case for t_1 is when V_{IN} is at its minimum value and the worst case for t_2 is when V_{IN} is at its maximum value (assuming that V_{OUT}, V_{DIODE} and V_{SAT} do not change much).

To select an inductor for a particular application, the worst case input and output conditions must be determined. Based on the worst case output current we can estimate efficiency and therefore the required input current. Remember that this is power conversion, so the worst case average input current will occur at maximum output current, one minimum input voltage.

$$\text{Average } I_{IN(max)} = \frac{V_{OUT} \times I_{OUT(max)}}{V_{IN(min)} \times \text{Efficency}}$$

Referring to Figure 1, it can be seen the peak input current will be twice the average input current. Rearranging the inductor equation to solve for L:

$$L = \frac{V}{I} \times t_1$$

$$L = \frac{V_{IN(min)}}{2 \times \text{Average } I_{IN(max)}} \times t_1$$

$$\text{where } t_1 = \frac{\text{duty cycle}}{f_{OSC}} = \frac{0.67}{20\text{kHz}}$$

To illustrate the use of these equations a design example will be given:

Assume:

V_{OUT} = 3.0V

$I_{OUT(max)}$ =10mA

$V_{IN(min)}$ = 1.0V

efficiency = 75%

$$\text{Average } I_{IN(max)} = \frac{5\text{V} \times 5\text{mA}}{1.0\text{V} \times 0.75} = 33.3\text{mA}$$

$$L = \frac{1.0\text{V} \times 0.7}{2 \times 33.3\text{mA} \times 20\text{kHz}}$$

$$I_{IN(max)} = \frac{3.0 \times 10\text{mA}}{1.0 \times .75} = 40\text{mA}$$

$$L = \frac{1.0\text{V} \times 0.7}{2 \times 40 \times 20\text{kHz}} = 438\mu\text{H}$$

L = 438µH

Use the next lowest standard value of inductor and verify that it does not saturate at a current below about 75mA (< 2 · 33.3mA).

Typical Application Circuit

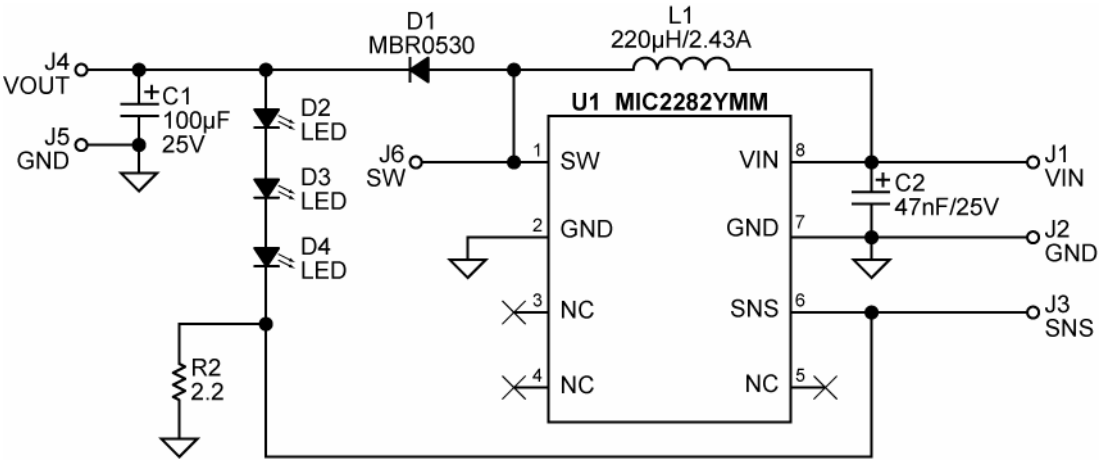

Bill of Materials

Item	Part Number	Manufacturer	Description	Qty.
C1	TAJE107K035RNJ	AVX	Capacitor,100µF ,20V , TANT	1
C2	TAJE476K035RNJ	AVX	Capacitor ,47µF ,25V , TANT	1
D1	MBR0530	Fairchild	500mA, 30V Schottky Rectifier	1
D2, D3, D4	OVS5WBCR4	OPTEK Technology,Inc	100mA, White LED	3
L1	DR127-221-R	Coil Tronics	Inductor, 200µH, 2.43A	1
R2	CRCW06032R20FKEA	Vishay Dale	Resistor,2.2 Ohms , 0603 , 1% , 1/16W	1
U1	**MIC2282YMM**	**Micrel, Inc.[6]**	**Single-Cell Boost LED Driver**	**1**

Notes:

1. AVX: www.AVX.com.
2. Fairchild Semi: www.fairchildsemi.com.
3. OPTEK Technology: www.optekinc.com.
4. Coil Tronics: www.cooperbussman.com.
5. Vishay Tel: www.vishay.com.
6. **Micrel, Inc.: www.micrel.com.**

PCB Layout

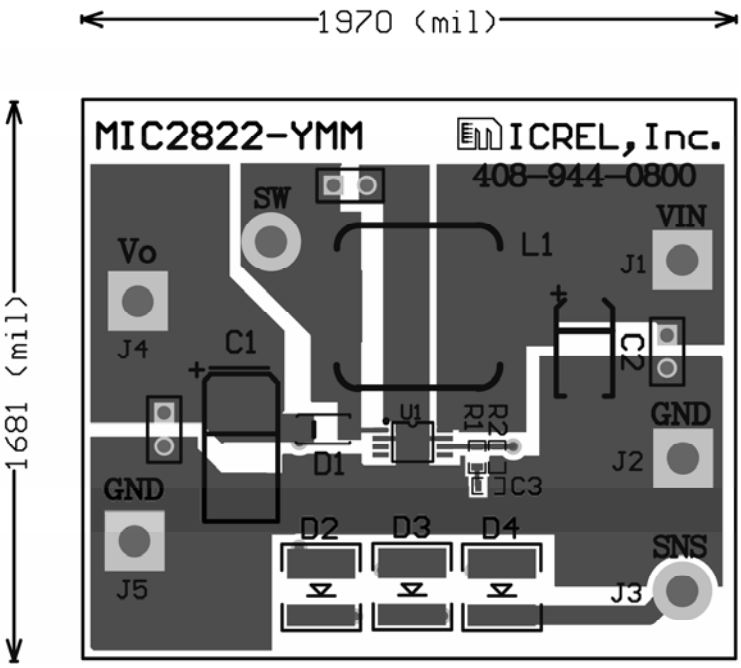

TOP LAYER

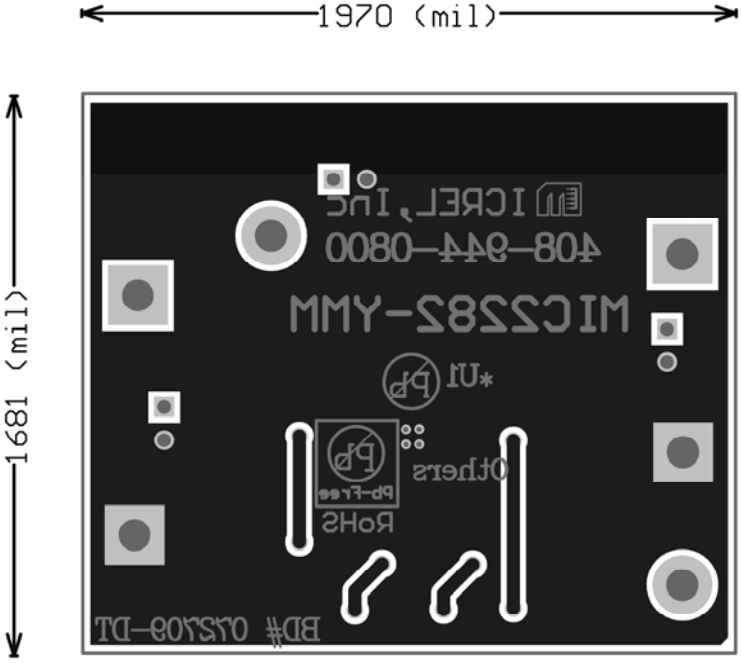

BOTTOM LAYER

Package Information

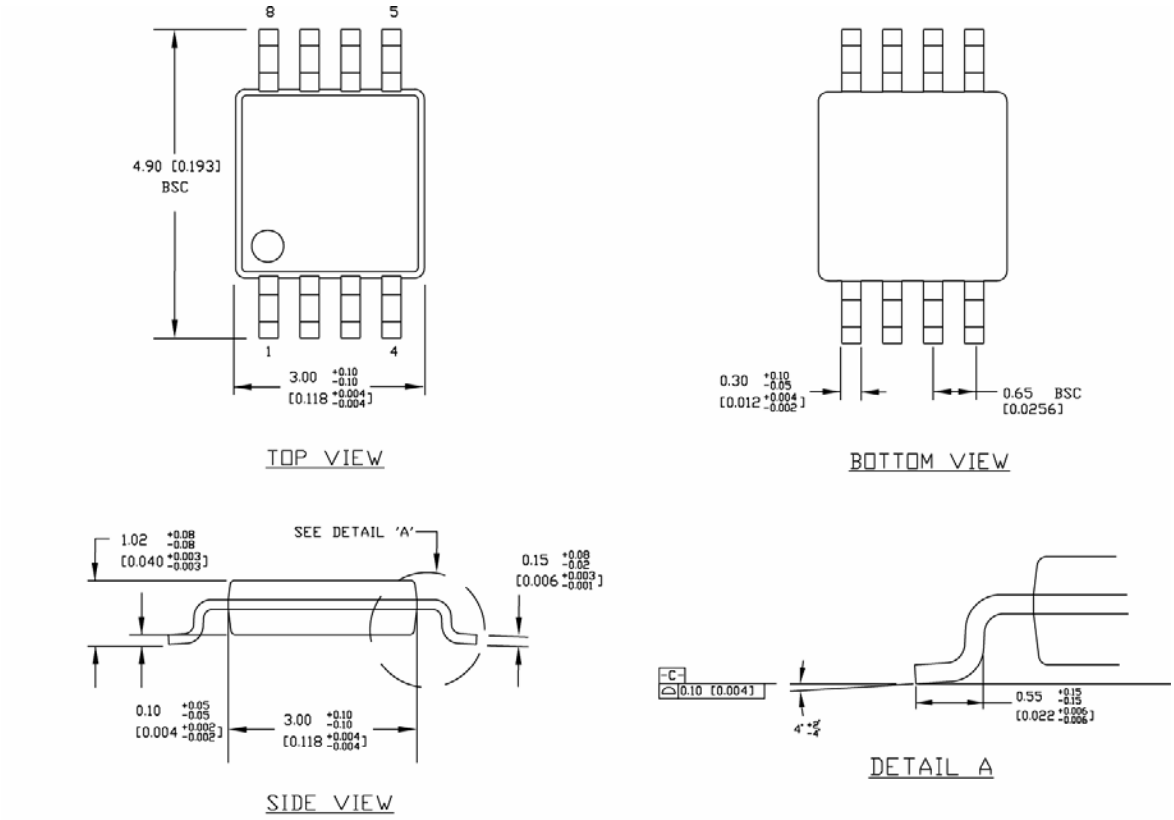

NOTES:
1. DIMENSIONS ARE IN MM [INCHES].
2. CONTROLLING DIMENSION: MM
3. DIMENSION DOES NOT INCLUDE MOLD FLASH OR PROTRUSIONS, EITHER OF WHICH SHALL NOT EXCEED 0.20 [0.008] PER SIDE.

8-Pin MSOP (MM)

MICREL, INC. 2180 FORTUNE DRIVE SAN JOSE, CA 95131 USA
TEL +1 (408) 944-0800 FAX +1 (408) 474-1000 WEB http://www.micrel.com

The information furnished by Micrel in this data sheet is believed to be accurate and reliable. However, no responsibility is assumed by Micrel for its use. Micrel reserves the right to change circuitry and specifications at any time without notification to the customer.

Micrel Products are not designed or authorized for use as components in life support appliances, devices or systems where malfunction of a product can reasonably be expected to result in personal injury. Life support devices or systems are devices or systems that (a) are intended for surgical implant into the body or (b) support or sustain life, and whose failure to perform can be reasonably expected to result in a significant injury to the user. A Purchaser's use or sale of Micrel Products for use in life support appliances, devices or systems is a Purchaser's own risk and Purchaser agrees to fully indemnify Micrel for any damages resulting from such use or sale.

© 2009 Micrel, Incorporated.

Looking for pricing, stock, or lifecycle information?

Click below to explore more details on WIN SOURCE:

- View MIC2282YMM-TR on WIN SOURCE
- Microchip Technology Information

Optimize Your Supply Chain with WIN SOURCE Solutions

- Global Sourcing Solution
- Obsolete Management
- Cost Control Management
- Shortage Management
- Alternative Solution
- Excess Inventory Management