THE DATASHEET OF

MIC2570-2BM

www.win-source.net 0086-755-83957316

MIC2570

Two-Cell Switching Regulator

General Description

Micrel's MIC2570 is a micropower boost switching regulator that operates from two alkaline, two nickel-metal-hydride cells, or one lithium cell.

The MIC2570 accepts a positive input voltage between 1.3V and 15V. Its typical no-load supply current is 130µA.

The MIC2570 is available in selectable fixed output or adjustable output versions. The MIC2570-1 can be configured for 2.85V, 3.3V, or 5V by connecting one of three separate feedback pins to the output. The MIC2570-2 can be configured for an output voltage ranging between its input voltage and 36V, using an external resistor network.

The MIC2570 has a fixed switching frequency of 20kHz. An external SYNC connection allows the switching frequency to be synchronized to an external signal.

The MIC2570 requires only four components (diode, inductor, input capacitor and output capacitor) to implement a boost regulator. A complete regulator can be constructed in a 0.6 in^2 area.

All versions are available in an 8-lead SOIC with an operating range from –40°C to +85°.

Features

- Operates from a two-cell supply
  1.3V to 15V operation
- 130µA typical quiescent current
- Complete regulator fits 0.6 in^2 area
- 2.85V/3.3V/5V selectable output voltage (MIC2570-1)
- Adjustable output up to 36V (MIC2570-2)
- 1A current limited pass element
- Frequency synchronization input
- 8-lead SOIC package

Applications

- LCD bias generator
- Glucose meters
- Single-cell lithium to 3.3V or 5V converters
- Two-cell alkaline to ±5V converters
- Two-cell alkaline to –5V converters
- Battery-powered, hand-held instruments
- Palmtop computers
- Remote controls
- Detectors
- Battery Backup Supplies

Typical Applications

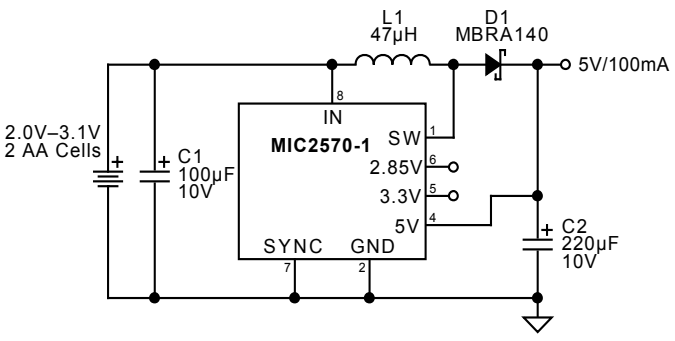

Two-Cell to 5V DC-to-DC Converter

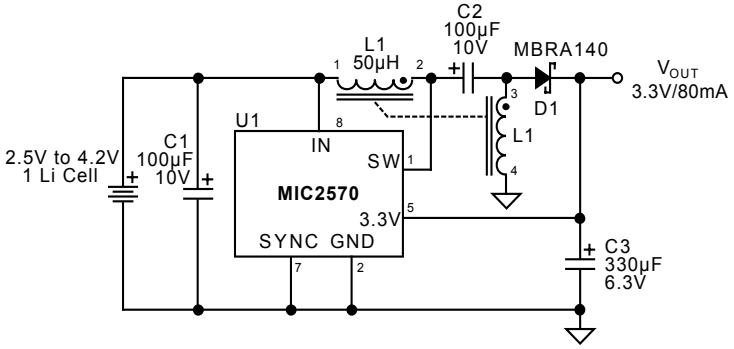

Single-Cell Lithium to 3.3V/80mARegulator

Ordering Information

Part Number		Temperature Range	Voltage	Frequency	Package
Standard	Pb-Free				
MIC2570-1BM	MIC2570-1YM	–40ºC to +85ºC	Selectable*	20kHz	8-pin SOIC
MIC2570-2BM	MIC2570-2YM	–40ºC to +85ºC	Adjustable	20kHz	8-pin SOIC

* Externally selectable for 2.85V, 3.3V, or 5V

Pin Configuration

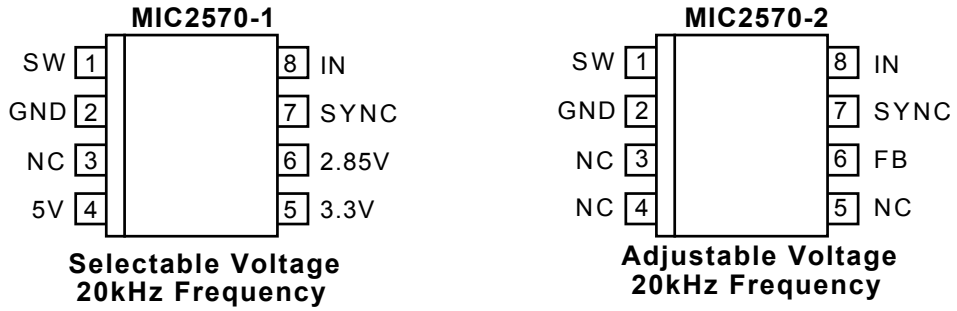

8-Lead SOIC (M)

Pin Description

Pin No. (Version†)	Pin Name	Pin Function
1	SW	Switch: NPN output switch transistor collector.
2	GND	Power Ground: NPN output switch transistor emitter.
3	NC	Not internally connected.
4 (-1)	5V	5V Feedback (Input): Fixed 5V feedback to internal resistive divider.
4 (-2)	NC	Not internally connected.
5 (-1)	3.3V	3.3V Feedback (Input): Fixed 3.3V feedback to internal resistive divider.
5 (-2)	NC	Not internally connected.
6 (-1)	2.85V	2.85V Feedback (Input): Fixed 2.85V feedback to internal resistive divider.
6 (-2)	FB	Feedback (Input): 0.22V feedback from external voltage divider network.
7	SYNC	Synchronization (Input): Oscillator start timing. Oscillator synchronizes to falling edge of sync signal.
8	IN	Supply (Input): Positive supply voltage input.

† Example: (-1) indicates the pin description is applicable to the MIC2570-1 only.

Absolute Maximum Ratings

Supply Voltage (V_{IN}) 18V
Switch Voltage (V_{SW}) 36V
Switch Current (I_{SW}) 1A
Sync Voltage (V_{SYNC}) ..... –0.3V to 15V
Storage Temperature (T_A) ..... –65°C to +150°C
SOIC Power Dissipation (P_D) 400mW

Operating Ratings

Supply Voltage (V_{IN}) ..... +1.3V to +15V
Ambient Operating Temperature (T_A) ..... –40°C to +85°C
Junction Temperature (T_J) ..... –40°C to +125°C
SOIC Thermal Resistance (θ_{JA}) ..... 140°C/W

Electrical Characteristics

V_{IN} = 2.5V; T_A = 25°C, **bold** indicates –40°C ≤ T_A ≤ 85°C; unless noted

Parameter	Condition	Min	Typ	Max	Units
Input Voltage	Startup guaranteed, I_{SW} = 100mA	**1.3**		**15**	V
Quiescent Current	Output switch off		130		µA
Fixed Feedback Voltage	MIC2570-1; $V_{2.85V\ pin} = V_{OUT}$, I_{SW} = 100mA MIC2570-1; $V_{3.3V\ pin} = V_{OUT}$, I_{SW} = 100mA MIC2570-1; $V_{5V\ pin} = V_{OUT}$, I_{SW} = 100mA	2.7 3.14 4.75	2.85 3.30 5.00	3.0 3.47 5.25	V V V
Reference Voltage	MIC2570-2, [adj. voltage versions], I_{SW} = 100mA, **Note 1**	208	220	232	mV
Comparator Hysteresis	MIC2570-2, [adj. voltage versions]		6		mV
Output Hysteresis	MIC2570-1; $V_{2.85V\ pin} = V_{OUT}$, I_{SW} = 100mA MIC2570-1; $V_{3.3V\ pin} = V_{OUT}$, I_{SW} = 100mA MIC2570-1; $V_{5V\ pin} = V_{OUT}$, I_{SW} = 100mA		65 75 120		mV mV mV
Feedback Current	MIC2570-1; $V_{2.85V\ pin} = V_{OUT}$ MIC2570-1; $V_{3.3V\ pin} = V_{OUT}$ MIC2570-1; $V_{5V\ pin} = V_{OUT}$ MIC2570-2 [adj. voltage versions]; V_{FB} = 0V		6 6 6 25		µA µA µA nA
Reference Line Regulation	1.5V ≤ V_{IN} ≤ 15V		0.35		%/V
Switch Saturation Voltage	V_{IN} = 1.3V, I_{SW} = 300mA V_{IN} = 1.5V, I_{SW} = 800mA V_{IN} = 3.0V, I_{SW} = 800mA		250 450 450		mV mV mV
Switch Leakage Current	Output switch off, V_{SW} = 36V		1		µA
Oscillator Frequency	MIC2570-1, -2; I_{SW} = 100mA		20		kHz
Maximum Output Voltage				36	V
Sync Threshold Voltage			0.7		V
Switch On-Time			35		µs
Currrent Limit			1.1		A
Duty Cycle	V_{FB} < V_{REF}, I_{SW} = 100mA		67		%

General Note: Devices are ESD protected; however, handling precautions are recommended.

Note 1: Measured using comparator trip point.

Typical Characteristics

Switch Saturation Voltage

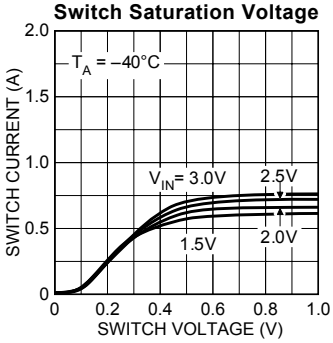

Switch Saturation Voltage

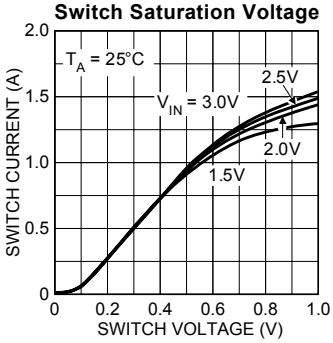

Switch Saturation Voltage

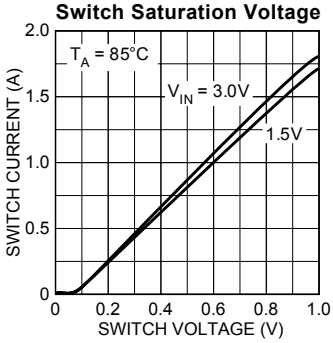

Oscillator Frequency vs. Temperature

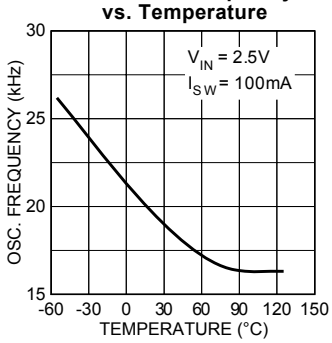

Oscillator Duty Cycle vs. Temperature

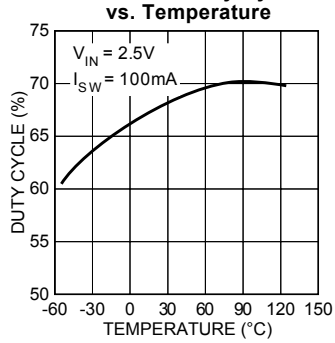

Quiescent Current vs. Temperature

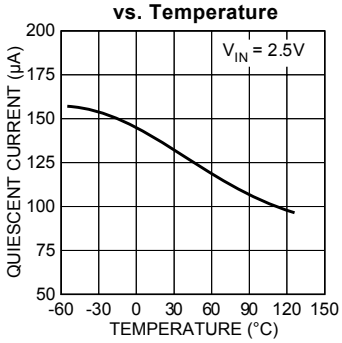

Feedback Current vs. Temperature

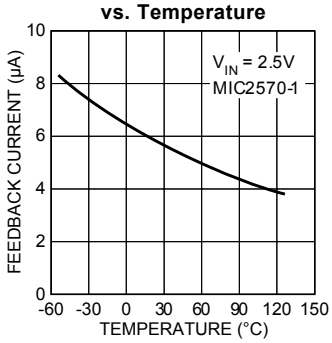

Feedback Current vs. Temperature

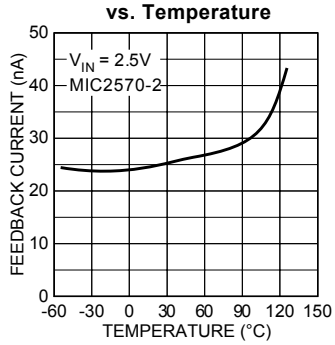

Quiescent Current vs. Supply Voltage

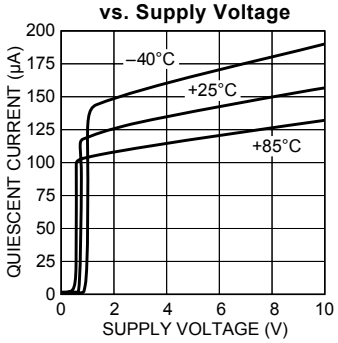

Output Current Limit vs. Temperature

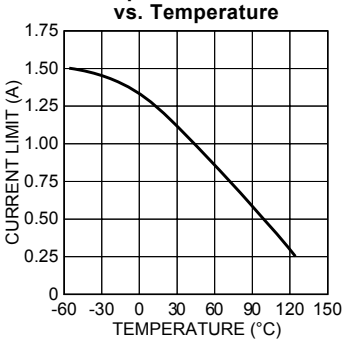

Switch Leakage Current vs. Temperature

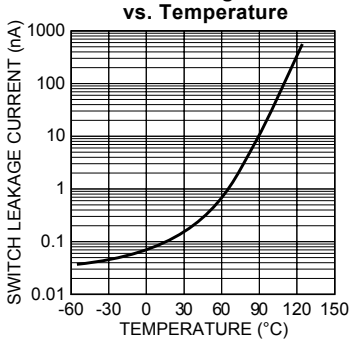

Output Hysteresis vs. Temperature

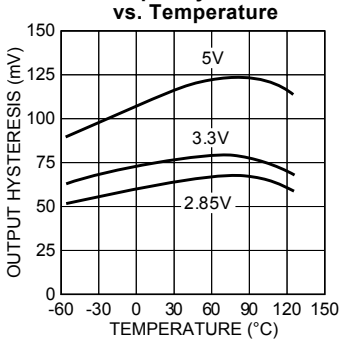

Block Diagrams

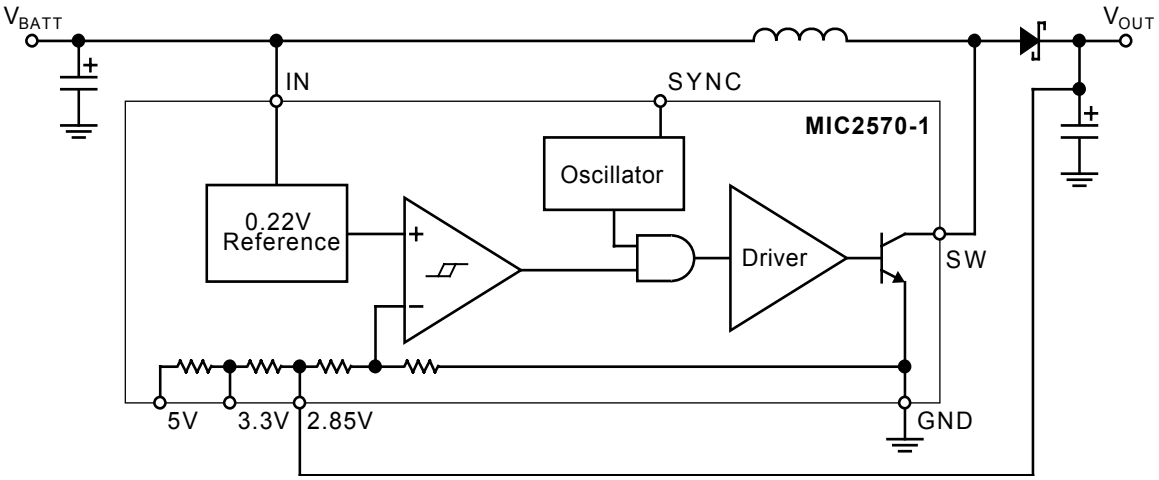

Selectable Voltage Version with External Components

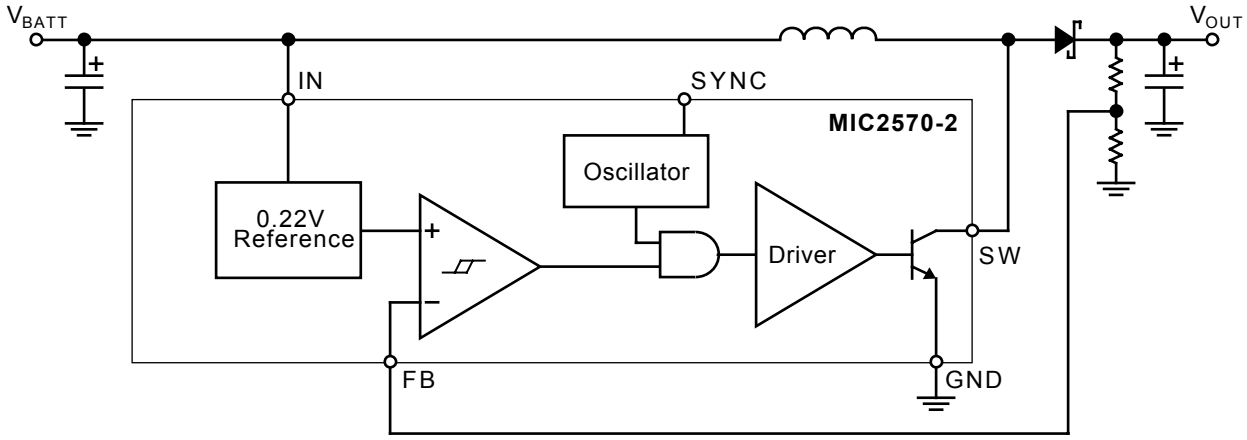

Adjustable Voltage Version with External Components

Functional Description

The MIC2570 switch-mode power supply (SMPS) is a gated oscillator architecture designed to operate from an input voltage as low as 1.3V and provide a high-efficiency fixed or adjustable regulated output voltage. One advantage of this architecture is that the output switch is disabled whenever the output voltage is above the feedback comparator threshold thereby greatly reducing quiescent current and improving efficiency, especially at low output currents.

Refer to the Block Diagrams for the following discription of typical gated oscillator boost regulator function.

The bandgap reference provides a constant 0.22V over a wide range of input voltage and junction temperature. The comparator senses the output voltage through an internal or external resistor divider and compares it to the bandgap reference voltage.

When the voltage at the inverting input of the comparator is below 0.22V, the comparator output is high and the output of the oscillator is allowed to pass through the AND gate to the output driver and output switch. The output switch then turns on and off storing energy in the inductor. When the output switch is on (low) energy is stored in the inductor; when the switch is off (high) the stored energy is dumped into the output capacitor which causes the output voltage to rise.

When the output voltage is high enough to cause the comparator output to be low (inverting input voltage is above 0.22V) the AND gate is disabled and the output switch remains off (high). The output switch remains disabled until the output voltage falls low enough to cause the comparator output to go high.

There is about 6mV of hysteresis built into the comparator to prevent jitter about the switch point. Due to the gain of the feedback resistor divider the voltage at V_{OUT} experiences about 120mV of hysteresis for a 5V output.

Appications Information

Oscillator Duty Cycle and Frequency

The oscillator duty cycle is set to 67% which is optimized to provide maximum load current for output voltages approximately 3× larger than the input voltage. Other output voltages are also easily generated but at a small cost in efficiency. The fixed oscillator frequency (options -1 and -2) is set to 20kHz.

Output Waveforms

The voltage waveform seen at the collector of the output switch (SW pin) is either a continuous value equal to V_{IN} or a switching waveform running at a frequency and duty cycle set by the oscillator. The continuous voltage equal to V_{IN} happens when the voltage at the output (V_{OUT}) is high enough to cause the comparator to disable the AND gate. In this state the output switch is off and no switching of the inductor occurs. When V_{OUT} drops low enough to cause the comparator output to change to the high state the output switch is driven by the oscillator. See Figure 1 for typical voltage waveforms in a boost application.

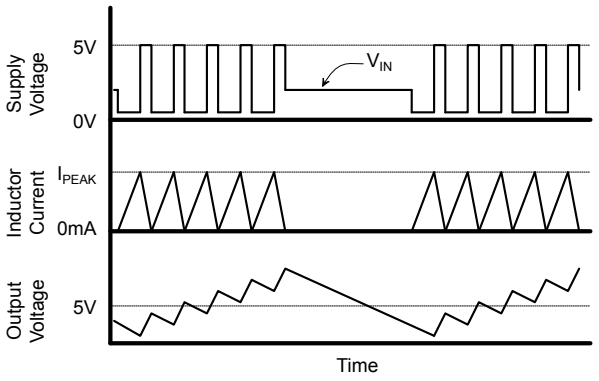

Figure 1. Typical Boost Regulator Waveforms

Synchronization

The SYNC pin is used to synchronize the MIC2570 to an external oscillator or clock signal. This can reduce system noise by correlating switching noise with a known system frequency. When not in use, the SYNC pin should be grounded to prevent spurious circuit operation. A falling edge at the SYNC input triggers a one-shot pulse which resets the oscillator. It is possible to use the SYNC pin to generate oscillator duty cycles from approximately 20% up to the nominal duty cycle.

Current Limit

Current limit for the MIC2570 is internally set with a resistor. It functions by modifying the oscillator duty cycle and frequency. When current exceeds 1.2A, the duty cycle is reduced (switch on-time is reduced, off-time is unaffected) and the corresponding frequency is increased. In this way less time is available for the inductor current to build up while maintaining the same discharge time. The onset of current limit is soft rather than abrupt but sufficient to protect the inductor and output switch from damage. Certain combinations of input voltage, output voltage and load current can cause the inductor to go into a continuous mode of operation. This is what happens when the inductor current can not fall to zero and occurs when:

$$\text{duty cycle} \leq \frac{V_{OUT} + V_{DIODE} - V_{IN}}{V_{OUT} + V_{DIODE} - V_{SAT}}$$

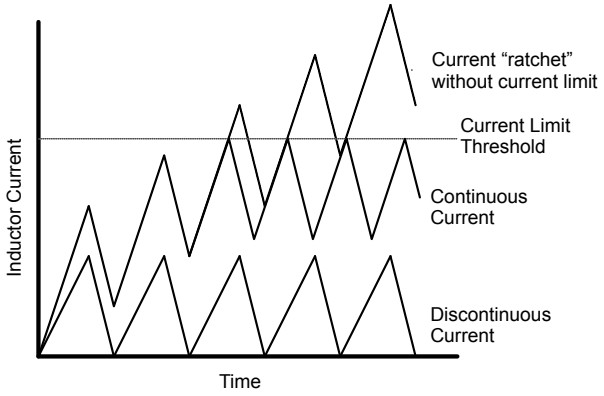

Figure 2. Current Limit Behavior

Figure 2 shows an example of inductor current in the continuous mode with its associated change in oscillator frequency and duty cycle. This situation is most likely to occur with relatively small inductor values, large input voltage variations and output voltages which are less than ~3× the input voltage. Selection of an inductor with a saturation threshold above 1.2A will insure that the system can withstand these conditions.

Inductors, Capacitors and Diodes

The importance of choosing correct inductors, capacitors and diodes can not be ignored. Poor choices for these components can cause problems as severe as circuit failure or as subtle as poorer than expected efficiency.

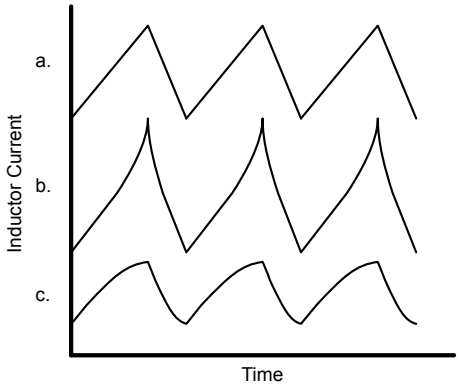

Figure 3. Inductor Current: a. Normal, b. Saturating, and c. Excessive ESR

Inductors

Inductors must be selected such that they do not saturate under maximum current conditions. When an inductor saturates, its effective inductance drops rapidly and the current can suddenly jump to very high and destructive values.

Figure 3 compares inductors with currents that are correct and unacceptable due to core saturation. The inductors have the same nominal inductance but Figure 3b has a lower saturation threshold. Another consideration in the selection of inductors is the radiated energy. In general, toroids have the best radiation characteristics while bobbins have the worst. Some bobbins have caps or enclosures which significantly reduce stray radiation.

The last electrical characteristic of the inductor that must be considered is ESR (equivalent series resistance). Figure 3c shows the current waveform when ESR is excessive. The normal symptom of excessive ESR is reduced power transfer efficiency.

Capacitors

It is important to select high-quality, low ESR, filter capacitors for the output of the regulator circuit. High ESR in the output capacitor causes excessive ripple due to the voltage drop across the ESR. A triangular current pulse with a peak of 500mA into a 200mΩ ESR can cause 100mV of ripple at the output due the capacitor only. Acceptable values of ESR are typically in the 50mΩ range. Inexpensive aluminum electrolytic capacitors usually are the worst choice while tantalum capacitors are typically better. Figure 4 demonstrates the effect of capacitor ESR on output ripple voltage.

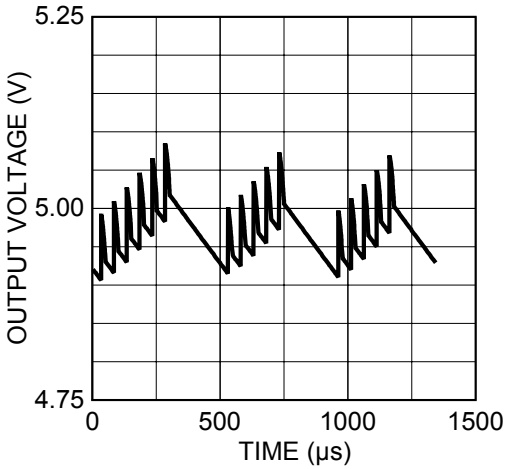

Figure 4. Output Ripple

Output Diode

Finally, the output diode must be selected to have adequate reverse breakdown voltage and low forward voltage at the application current. Schottky diodes typically meet these requirements.

Standard silicon diodes have forward voltages which are too large except in extremely low power applications. They can also be very slow, especially those suited to power rectification such as the 1N400x series, which affects efficiency.

Inductor Behavior

The inductor is an energy storage and transfer device. Its behavior (neglecting series resistance) is described by the following equation:

$$I = \frac{V}{L} \times t$$

where:

V = inductor voltage (V)

L = inductor value (H)

t = time (s)

I = inductor current (A)

If a voltage is applied across an inductor (initial current is zero) for a known time, the current flowing through the inductor is a linear ramp starting at zero, reaching a maximum value at the end of the period. When the output switch is on, the voltage across the inductor is:

$$V_1 = V_{IN} - V_{SAT}$$

When the output switch turns off, the voltage across the inductor changes sign and flies high in an attempt to maintain a constant current. The inductor voltage will eventually be clamped to a diode drop above V_{OUT}. Therefore, when the output switch is off, the voltage across the inductor is:

$$V_2 = V_{OUT} + V_{DIODE} - V_{IN}$$

For normal operation the inductor current is a triangular waveform which returns to zero current (discontinuous mode)

at each cycle. At the threshold between continuous and discontinuous operation we can use the fact that $I_1 = I_2$ to get:

$$V_1 \times t_1 = V_2 \times t_2$$

$$\frac{V_1}{V_2} = \frac{t_2}{t_1}$$

This relationship is useful for finding the desired oscillator duty cycle based on input and output voltages. Since input voltages typically vary widely over the life of the battery, care must be taken to consider the worst case voltage for each parameter. For example, the worst case for t_1 is when V_{IN} is at its minimum value and the worst case for t_2 is when V_{IN} is at its maximum value (assuming that V_{OUT}, V_{DIODE} and V_{SAT} do not change much).

To select an inductor for a particular application, the worst case input and output conditions must be determined. Based on the worst case output current we can estimate efficiency and therefore the required input current. Remember that this is *power conversion, so the worst case average input current will occur at maximum output current and minimum input voltage.*

$$\text{Average } I_{IN(max)} = \frac{V_{OUT} \times I_{OUT(max)}}{V_{IN(min)} \times \text{Efficiency}}$$

Referring to Figure 1, it can be seen the peak input current will be twice the average input current. Rearranging the inductor equation to solve for L:

$$L = \frac{V}{I} \times t_1$$

$$L = \frac{V_{IN(min)}}{2 \times \text{Average } I_{IN(max)}} \times t_1$$

$$\text{where } t_1 = \frac{\text{duty cycle}}{f_{OSC}}$$

To illustrate the use of these equations a design example will be given:

Assume:

MIC2570-1 (fixed oscillator)
V_{OUT} = 5V
$I_{OUT(max)}$ =50mA
$V_{IN(min)}$ = 1.8V
efficiency = 75%.

$$\text{Average } I_{IN(max)} = \frac{5V \times 50mA}{1.8V \times 0.75} \times 185.2mA$$

$$L = \frac{1.8V \times 0.7}{2 \times 185.2mA \times 20kHz}$$

L = 170µH

Use the next lowest standard value of inductor and verify that it does not saturate at a current below about 400mA (< 2 × 185.2mA).

Application Examples

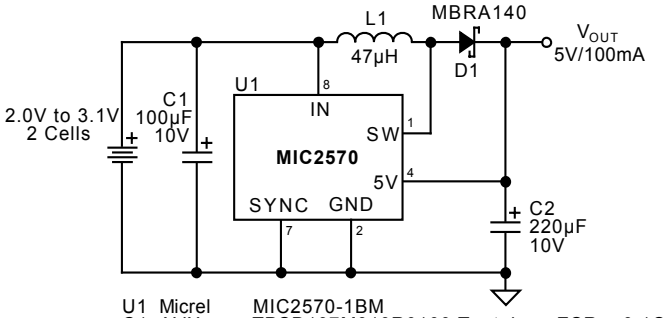

U1 Micrel MIC2570-1BM
C1 AVX TPSD107M010R0100 Tantalum, ESR = 0.1Ω
C2 AVX TPSE227M010R0100 Tantalum, ESR = 0.1Ω
D1 Motorola MBRA140T3
L1 Coilcraft DO3316P-473, DCR = 0.12Ω

Example 1. 5V/100mA Regulator

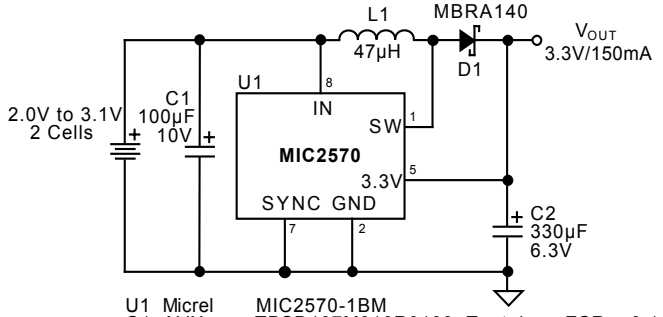

U1 Micrel MIC2570-1BM
C1 AVX TPSD107M010R0100 Tantalum, ESR = 0.1Ω
C2 AVX TPSE337M006R0100 Tantalum, ESR = 0.1Ω
D1 Motorola MBRA140T3
L1 Coilcraft DO3316P-473, DCR = 0.12Ω

Example 2. 3.3V/150mA Regulator

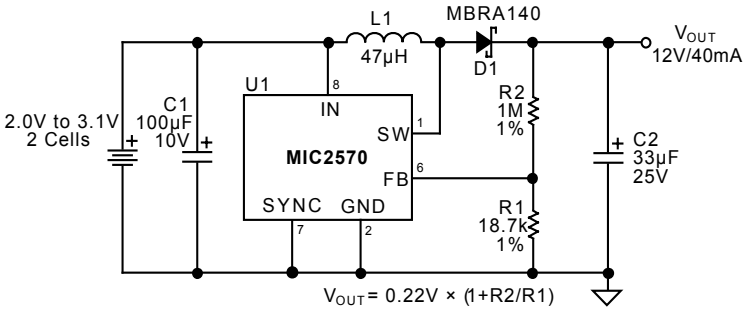

U1 Micrel MIC2570-2BM
C1 AVX TPSD107M010R0100 Tantalum, ESR = 0.11Ω
C2 AVX TPSE336M025R0300 Tantalum, ESR = 0.3Ω
D1 Motorola MBRA140T3
L1 Coilcraft DO3316P-473, DCR = 0.12Ω

Example 3. 12V/40mA Regulator

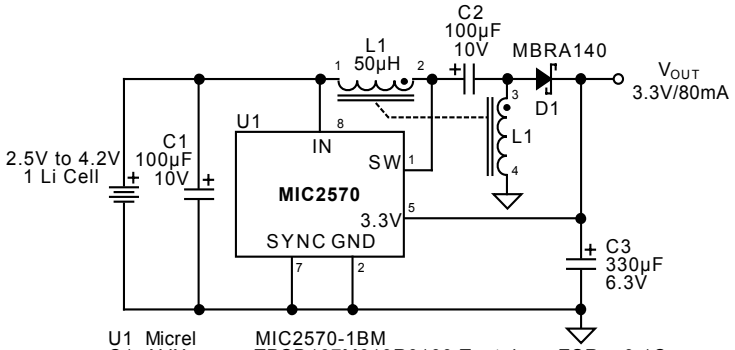

U1 Micrel MIC2570-1BM
C1 AVX TPSD107M010R0100 Tantalum, ESR = 0.1Ω
C2 AVX TPSD107M010R0100 Tantalum, ESR = 0.1Ω
C3 AVX TPSE337M006R0100 Tantalum, ESR = 0.1Ω
D1 Motorola MBRA140T3
L1 Coiltronics CTX50-4P DCR = 0.097Ω

Example 4. Single Cell Lithium to 3.3V/80mA Regulator

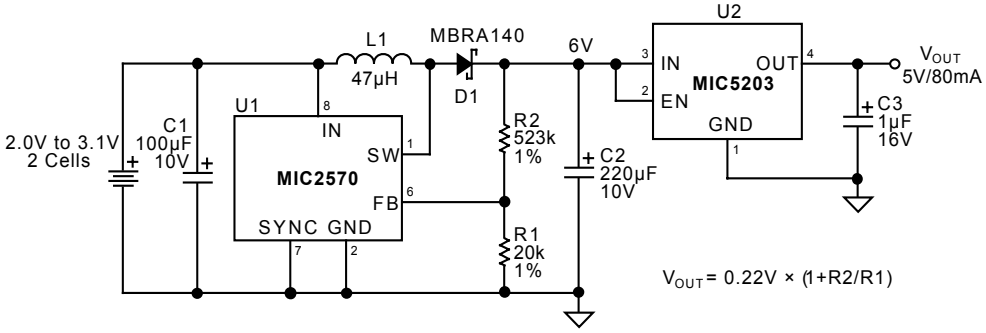

U1 Micrel MIC2570-2BM
U2 Micrel MIC5203-5.0BM4
C1 AVX TPSD107M010R0100 Tantalum ESR = 0.1Ω
C2 AVX TPSE227M010R0300 Tantalum ESR = 0.1Ω
C3 Sprague 293D105X0016A2W Tantalum
D1 Motorola MBRA140T3
L1 Coilcraft DO3316P-473 DCR = 0.12Ω

Example 5. Low-Noise 5V/80mA Regulator

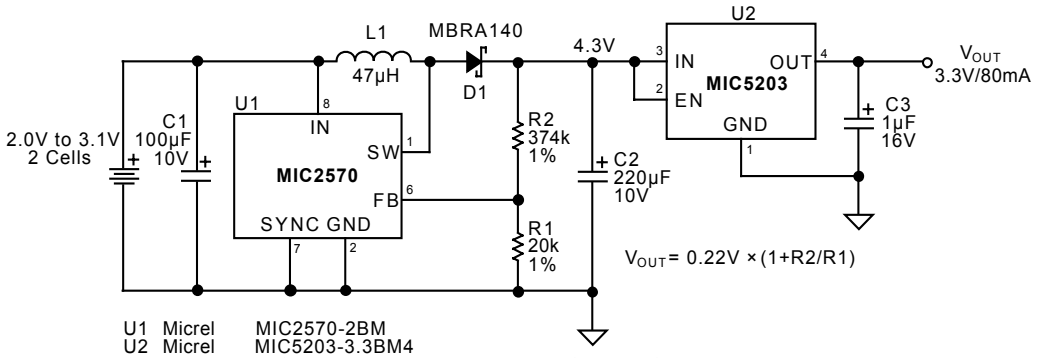

U1 Micrel MIC2570-2BM
U2 Micrel MIC5203-3.3BM4
C1 AVX TPSD107M010R0100 Tantalum ESR = 0.1Ω
C2 AVX TPSE227M010R0100 Tantalum ESR = 0.1Ω
C3 Sprague 293D105X0016A2W Tantalum
D1 Motorola MBRA140T3
L1 Coilcraft DO3316P-473 DCR = 0.12Ω

Example 6. Low-Noise 3.3V/80mA Regulator

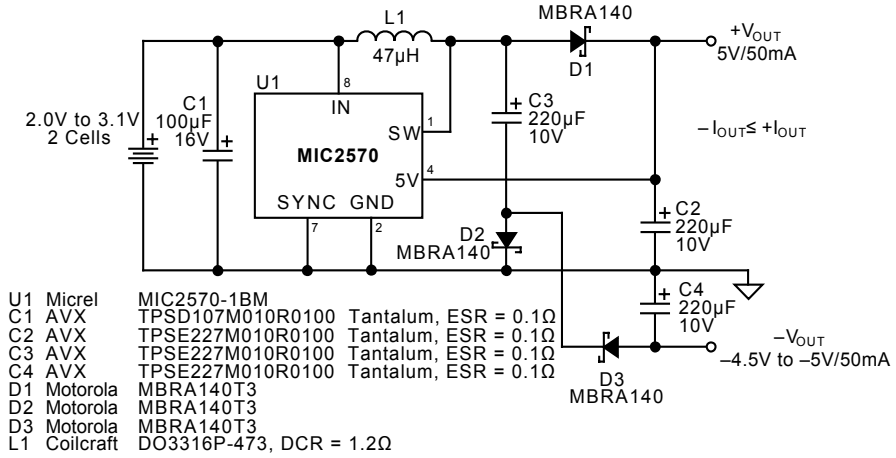

U1 Micrel MIC2570-1BM
C1 AVX TPSD107M010R0100 Tantalum, ESR = 0.1Ω
C2 AVX TPSE227M010R0100 Tantalum, ESR = 0.1Ω
C3 AVX TPSE227M010R0100 Tantalum, ESR = 0.1Ω
C4 AVX TPSE227M010R0100 Tantalum, ESR = 0.1Ω
D1 Motorola MBRA140T3
D2 Motorola MBRA140T3
D3 Motorola MBRA140T3
L1 Coilcraft DO3316P-473, DCR = 1.2Ω

Example 7. ±5V/50mA Regulator

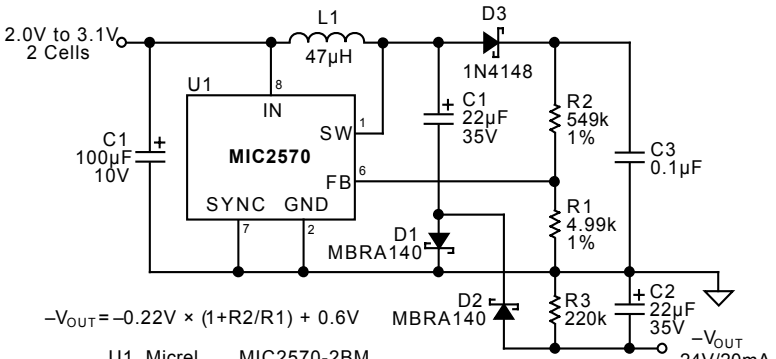

U1 Micrel MIC2570-2BM
C1 AVX TPSD107M010R0100, Tantalum ESR = 0.1Ω
C2 AVX TPSE226M035R0300, Tantalum ESR = 0.3Ω
C3 AVX TPSE226M035R0300, Tantalum ESR = 0.3Ω
D1 Motorola MBRA140T3
D2 Motorola MBRA140T3
L1 Coilcraft DO3316P-473, DCR = 0.12Ω

Example 8. –24V/20mA Regulator

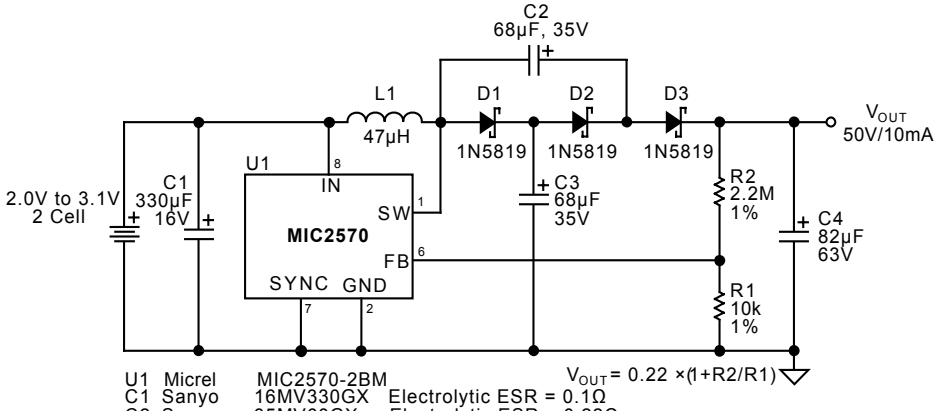

U1 Micrel MIC2570-2BM
C1 Sanyo 16MV330GX Electrolytic ESR = 0.1Ω
C2 Sanyo 35MV68GX Electrolytic ESR = 0.22Ω
C3 Sanyo 35MV68GX Electrolytic ESR = 0.22Ω
C4 Sanyo 63MV826X Electrolytic ESR = 0.34Ω
D1 Motorola 1N5819
D2 Motorola 1N5819
D3 Motorola 1N5819
L1 Sumida RCH106-470k DCR = 0.16Ω

Example 9. Voltage Doubler

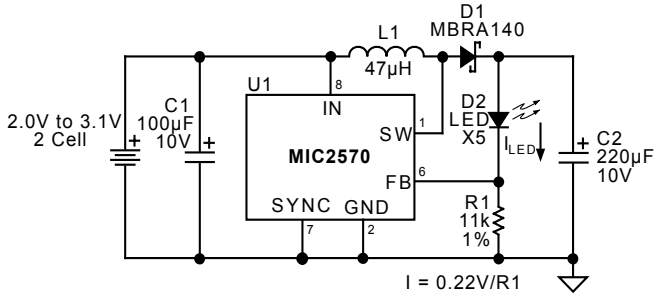

U1 Micrel MIC2570-2BM
C1 AVX TPSD107M010R0100 Tantalum ESR = 0.1Ω
C2 AVX TPSE227M010R0100 Tantalum ESR = 0.1Ω
D1 Motorola MBRA140T3
L1 Coilcraft DO3316P-473 DCR = 0.12Ω

Example 10. Constant-Current LED Supply

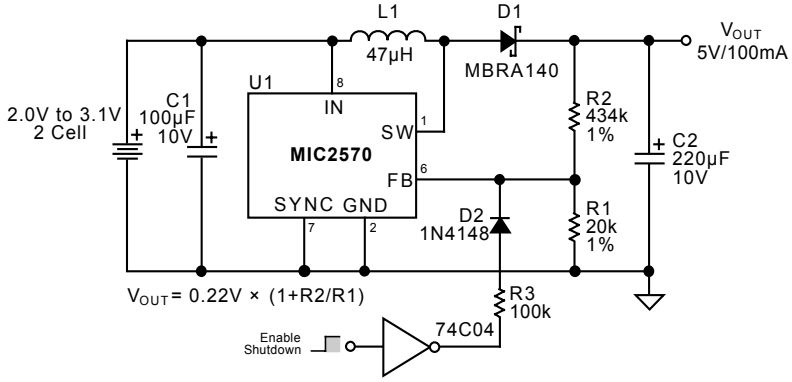

U1 Micrel MIC2570-2BM
C1 AVX TPSD107M010R0100 Tantalum ESR = 0.1Ω
C2 AVX TPSE227M010R0100 Tantalum ESR = 0.1Ω
D1 Motorola MBRA140T3
L1 Coilcraft DO3316P-473 DCR = 0.12Ω

Example 11. 5V/100mA Regulator with Shutdown

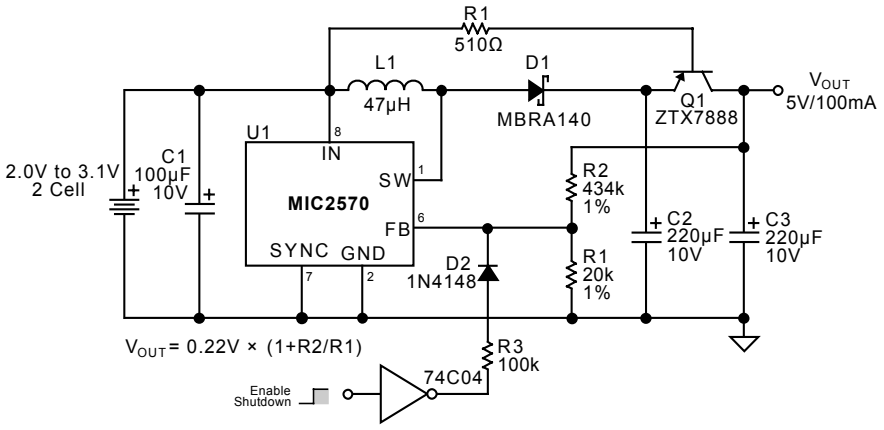

U1 Micrel MIC2570-2BM
C1 AVX TPSD107M010R0100 Tantalum ESR = 0.1Ω
C2 AVX TPSE227M010R0100 Tantalum ESR = 0.1Ω
C3 AVX TPSE227M010R0100 Tantalum ESR = 0.1Ω
D1 Motorola MBRA140T3
L1 Coilcraft DO3316P-473 DCR = 0.12Ω
Q1 Zetex ZTX7888

Example 12. 5V/100mA Regulator with Shutdown and Output Disconnect

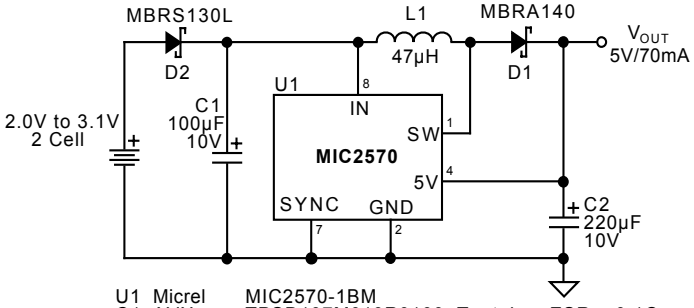

U1 Micrel MIC2570-1BM
C1 AVX TPSD107M010R0100 Tantalum ESR = 0.1Ω
C2 AVX TPSE227M010R0100 Tantalum ESR = 0.1Ω
D1 Motorola MBRA140T3
D2 Motorola MBRS130L
L1 Coilcraft DO3316P-473 DCR = 0.12Ω

Example 13. Reversed-Battery Protected Regulator

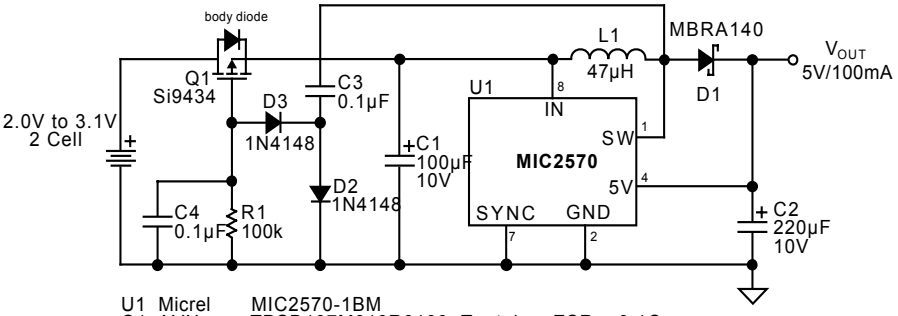

U1 Micrel MIC2570-1BM
C1 AVX TPSD107M010R0100 Tantalum ESR = 0.1Ω
C2 AVX TPSE227M010R0100 Tantalum ESR = 0.1Ω
D1 Motorola MBRA140T3
D2 Motorola MBRS130LT3
D3 Motorola MBRS130LT3
L1 Coilcraft DO3316P-473 DCR = 0.12
Q1 Siliconix Si9434 PMOS

Example 14. Improved Reversed-Battery Protected Regulator

Component Cross Reference

Capacitors				
	AVX Surface Mount (Tantalum)	*Sprague* Surface Mount (Tantalum)	*Sanyo* Through Hole (OS-CON)	*Sanyo* Through Hole (AL Electrolytic)
330µF/6.3V	TPSE337M006R0100	593D337X06R3E2W	10SA220M	16MV330GX (330µF/16V)
220µF/10V	TPSE227M010R0100	593D227X0010E2W	10SA220M	16MV330GX (330µF/16V)
100µF/10V	TPSD107M010R0100	593D107X0010D2W	10SA100M	16MV330GX (330µF/16V)
33µF/25V	TPSE336M025R0300	593D336X0025E2W		35MV68GX (68µF/35V)
22µF/35V	TPSE226M035R0300	593D226X0035E2W		35MV68GX (68µF/35V)
Diodes				
	Motorola Surface Mount (Schottky)	*GI* Surface Mount (Schottky)	*IR* Surface Mount (Schottky)	*Motorola* Through Hole (Schottky)
1A/40V	MBRA140T3	SS14	10MQ40	1N5819
1A/20V				1N5817
Inductors				
	Coilcraft Surface Mount (Button Cores)	*Coiltronics* Surface Mount (Torriod)	*Sumida* Surface Mount (Button Cores)	*Sumida* Through Hole (Button Cores)
22µH	DO3308P-223			
47µH	DO3316P-473		CD75-470LC	RCH-106-470k
50µH		CTX50-4P		

Suggested Manufacturers List

Inductors	**Capacitors**	**Diodes**	**Transistors**
Coilcraft 1102 Silver Lake Rd. Cary, IL 60013 tel: (708) 639-2361 fax: (708) 639-1469	*AVX Corp.* 801 17th Ave. South Myrtle Beach, SC 29577 tel: (803) 448-9411 fax: (803) 448-1943	*General Instruments (GI)* 10 Melville Park Rd. Melville, NY 11747 tel: (516) 847-3222 fax: (516) 847-3150	*Siliconix* 2201 Laurelwood Rd. Santa Clara, CA 96056 tel: (800) 554-5565
Coiltronics 6000 Park of Commerce Blvd. Boca Raton, FL 33487 tel: (407) 241-7876 fax: (407) 241-9339	*Sanyo Video Components Corp.* 2001 Sanyo Ave. San Diego, CA 92173 tel: (619) 661-6835 fax: (619) 661-1055	*International Rectifier Corp.* 233 Kansas St. El Segundo, CA 90245 tel: (310) 322-3331 fax: (310) 322-3332	*Zetex* 87 Modular Ave. Commack, NY 11725 tel: (516) 543-7100
Sumida Suite 209 637 E. Golf Road Arlington Heights, IL tel: (708) 956-0666 fax: (708) 956-0702	*Sprague Electric* Lower Main St. 60005 Sanford, ME 04073 tel: (207) 324-4140	*Motorola Inc.* MS 56-126 3102 North 56th St. Phoenix, AZ 85018 tel: (602) 244-3576 fax: (602) 244-4015	

Evaluation Board Layout

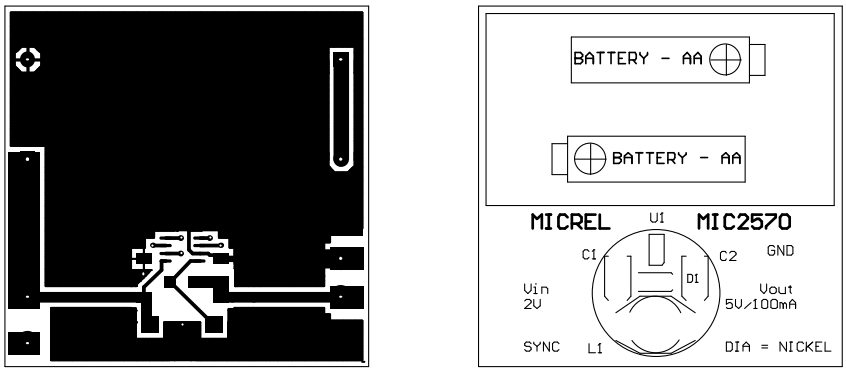

Component Side and Silk Screen (Not Actual Size)

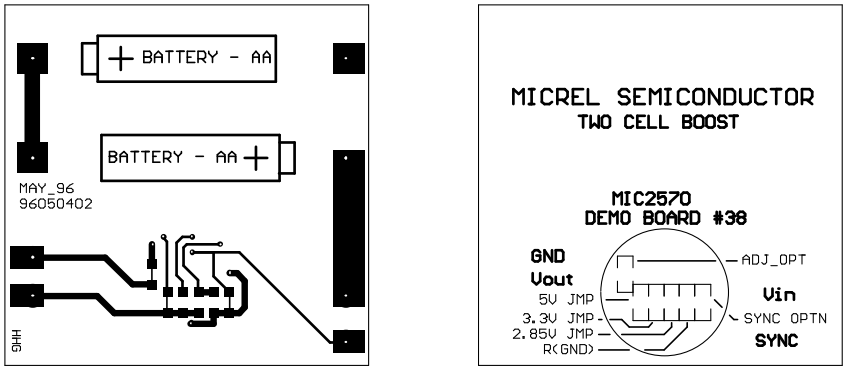

Solder Side and Silk Screen (Not Actual Size)

Package Information

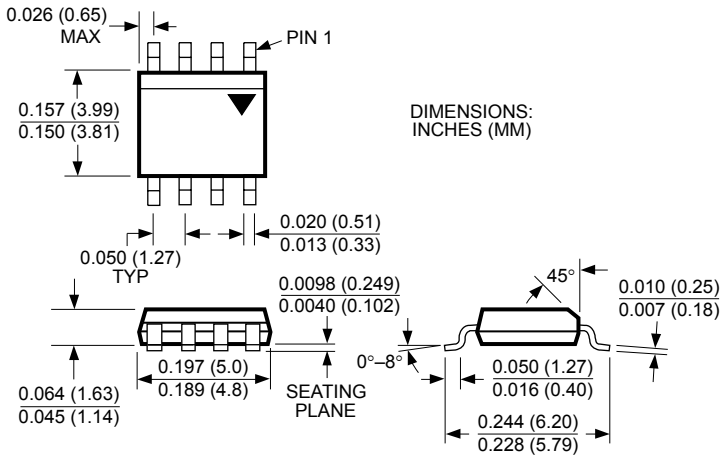

8-Pin SOIC (M)

MICREL INC. 2180 FORTUNE DRIVE SAN JOSE, CA 95131 USA

TEL + 1 (408) 944-0800 FAX + 1 (408) 474-1000 WEB http://www.micrel.com

This information furnished by

Micrel reserves the right to change circuitry and specifications at any time without notification to the customer.

Micrel Products are not

reasonably be expected to result in personal injury. Life support devices or systems are devices or systems that (a) are intended for surgical implant into the body or (b) support or sustain life, and whose failure to perform can be reasonably expected to result in a significant injury to the user. A Purchaser's use or sale of Micrel Pr

Micrel for any damages resulting from such use or sale.

© 2005 Micrel, Inc.

Looking for pricing, stock, or lifecycle information?

Click below to explore more details on WIN SOURCE:

- View MIC2570-2BM on WIN SOURCE
- Microchip Technology Information

Optimize Your Supply Chain with WIN SOURCE Solutions

- Global Sourcing Solution
- Obsolete Management
- Cost Control Management
- Shortage Management
- Alternative Solution
- Excess Inventory Management