WINSOURCE ELECTRONICS

THE DATASHEET OF

MIC3172YM

www.win-source.net 0086-755-83957316

MIC2172/3172

100 kHz, 1.25A Switching Regulators

Features

- 1.25A, 65V Internal Switch Rating
- 3V to 40V Input Voltage Range
- Current Mode Operation
- Internal Cycle-by-Cycle Current Limit
- Low External Parts Count
- Operates in Most Switching Topologies
- 7 mA Quiescent Current (Operating)
- <1 µA Quiescent Current, Shutdown Mode (MIC3172)
- TTL Shutdown Compatibility (MIC3172)
- External Frequency Synchronization (MIC2172)
- External Frequency Trim (MIC2172)
- Fits Most LT1172 Sockets (see Section 5.0, Applications Information)

Applications

- Laptop/Palmtop Computers
- Toys
- Handheld Instruments
- Off-Line Converter up to 50W (Requires External Power Switch)
- Predriver for Higher Power Capability
- Master/Slave Configurations (MIC2172)

General Description

The MIC2172 and MIC3172 are complete 100 kHz SMPS current mode controllers with internal 65V 1.25A power switches. The MIC2172 features external frequency synchronization or frequency adjustment, while the MIC3172 features an enable/shutdown control input.

Although primarily intended for voltage step-up applications, the floating switch architecture of the MIC2172/3172 makes it practical for step-down, inverting, and Cuk configurations as well as isolated topologies.

Operating from 3V to 40V, the MIC2172/3172 draws only 7 mA of quiescent current, making it attractive for battery-operated supplies.

The MIC3172 is for applications that require on/off control of the regulator. The MIC3172 is externally shut down by applying a TTL-low signal to EN (enable). When disabled, the MIC3172 draws only leakage current (typically less than 1 µA). EN must be high for normal operation. For applications not requiring control, EN must be tied to V_{IN} or TTL high.

The MIC2172 is for applications that require two or more SMPS regulators that operate from the same input supply. The MIC2172 features a SYNC input that allows locking of its internal oscillator to an external reference. This makes it possible to avoid the audible beat frequencies that result from the unequal oscillator frequencies of independent SMPS regulators.

A reference signal can be supplied by one MIC2172 designated as a master. To ensure locking of the slave's oscillators, the reference oscillator frequency must be higher than the slave. The master MIC2172's oscillator frequency is increased up to 135 kHz by connecting a resistor from SYNC to ground (see Section 5.0, Applications Information).

The MIC2172/3172 is available in an 8-pin plastic DIP or SOIC for –40°C to +85°C ambient temperature operation.

© 2019 Microchip Technology Inc.

Typical Application Circuits

MIC2172 5V to 12V Boost Converter

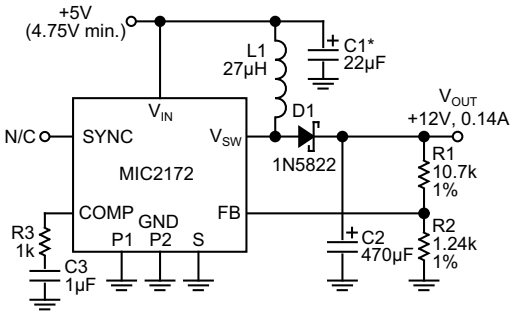

* Locate near MIC2172 when supply leads > 2"

MIC3172 5V Flyback Converter

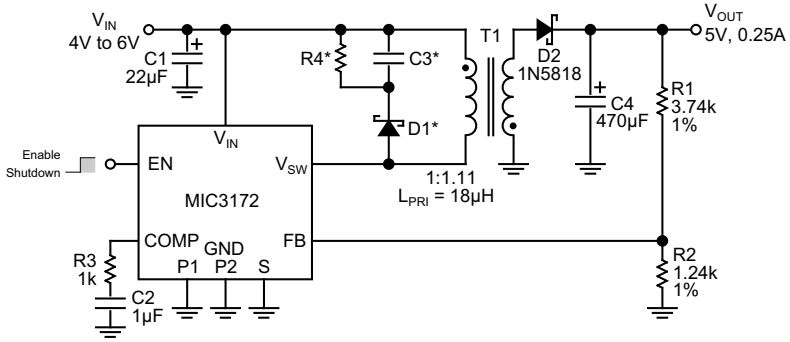

* Optional voltage clipper (may be req'd if T1 leakage inductance too high)

Package Types

8-Pin DIP (N)

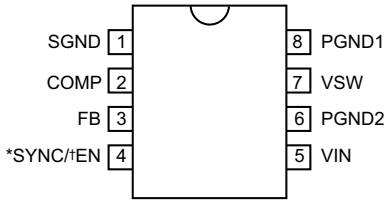

8-Pin DIP (M)

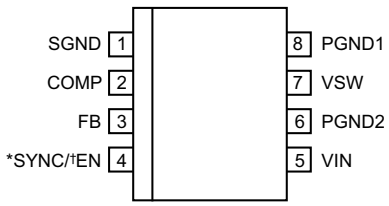

© 2019 Microchip Technology Inc.

Functional Block Diagrams

MIC2172 Functional Block Diagram

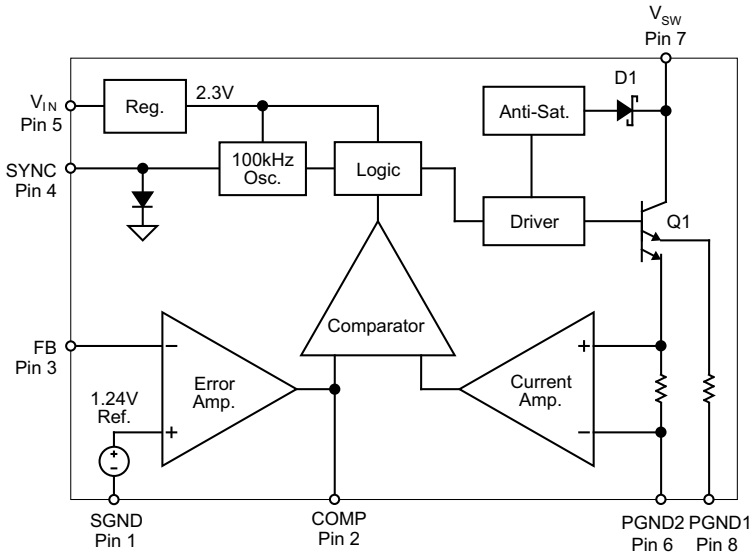

MIC3172 Functional Block Diagram

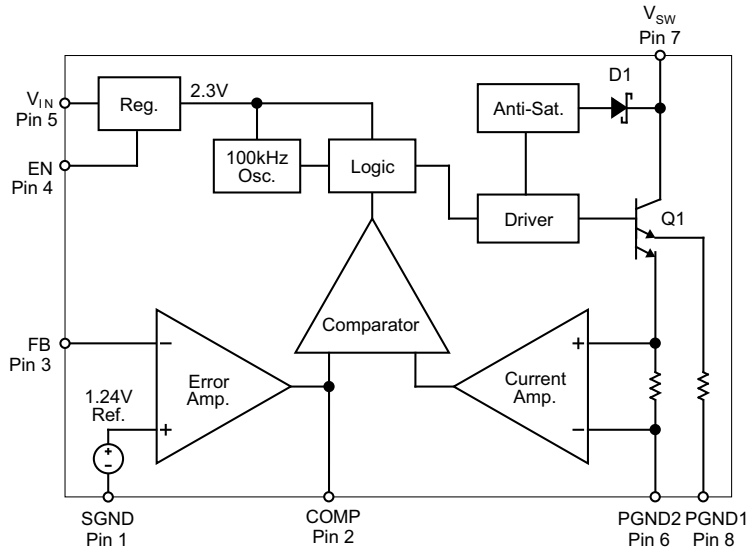

1.0 ELECTRICAL CHARACTERISTICS

Absolute Maximum Ratings †

Input Voltage (V_{IN}) 40V
Switch Voltage (V_{SW}) 65V
Feedback Voltage (V_{FB}) (Transient, 1 ms) ..... ±15V
Sync Current (I_{SYNC}) ..... 50 mA
Junction Temperature (T_J) ..... –55°C to +150°C
Storage Temperature (T_S) ..... –65°C to +150°C
Lead Temperature (Soldering 10 sec.) ..... 300°C

Operating Ratings ‡

Operating Junction Temperature (T_J) ..... –40°C to +125°C
Operating Ambient Temperature Range (T_A)
8-Pin PDIP ..... –40°C to +85°C
8-Pin SOIC ..... –40°C to +85°C
Thermal Resistance
8-Pin PDIP (θ_{JA}) ..... 130°C/W
8-Pin SOIC (θ_{JA}) ..... 120°C/W

† Notice: Stresses above those listed under “Absolute Maximum Ratings” may cause permanent damage to the device. This is a stress rating only and functional operation of the device at those or any other conditions above those indicated in the operational sections of this specification is not intended. Exposure to maximum rating conditions for extended periods may affect device reliability. Specifications are for packaged product only.

‡ Notice: The device is not guaranteed to function outside its operating ratings.

ELECTRICAL CHARACTERISTICS (MIC2172)

Electrical Characteristics: V_{IN} = 5V; T_A = 25°C, unless otherwise specified. **Bold** values indicate –40°C ≤ T_A ≤ 85°C. Note 1, Note 2

Parameter	Symbol	Min.	Typ.	Max.	Units	Conditions
Reference (Pin 2 tied to Pin 3)						
Feedback Voltage	V_{FB}	1.220	1.240	1.264	V	—
		1.214	—	**1.274**		—
Feedback Voltage Line Regulation	$\Delta V_{FB(LINE)}$	—	—	**0.03**	%/V	3V ≤ V_{IN} ≤ 40V
Feedback Bias Current	I_{FB}	—	310	750	nA	—
		—	—	**1100**		—
Error Amplifier						
Transconductance	$\Delta I_{COMP}/\Delta V_{FB}$	3.0	3.9	6.0	µA/mV	ΔI_{COMP} = ±25 µA
		2.4	—	**7.0**		
Voltage Gain	$\Delta V_{COMP}/\Delta V_{FB}$	500	800	2000	V/V	0.9V ≤ V_{COMP} ≤ 1.4V
Output Current	I_{COMP}	125	175	350	µA	V_{COMP} = 1.5V
		100	—	**400**		
Output Swing	$V_{COMP(MAX)}$	1.8	2.1	2.3	V	High Clamp, V_{FB} = 1V
	$V_{COMP(MIN)}$	0.25	0.35	0.52		Low Clamp, V_{FB} = 1.5V
Compensation Pin Threshold	V_{COMP_TH}	0.8	0.9	1.08	V	Duty Cycle = 0
		0.6	—	**1.25**		
Output Switch						
ON Resistance	$R_{SW(ON)}$	—	0.76	1	Ω	I_{SW} = 1A, V_{FB} = 0.8V
		—	—	**1.1**		

© 2019 Microchip Technology Inc.

ELECTRICAL CHARACTERISTICS (MIC2172) (CONTINUED)

Electrical Characteristics: V_{IN} = 5V; T_A = 25°C, unless otherwise specified. **Bold** values indicate –40°C ≤ T_A ≤ 85°C. Note 1, Note 2

Parameter	Symbol	Min.	Typ.	Max.	Units	Conditions
Current Limit	I_{CL}	**1.25**	—	**3**	A	Duty Cycle = 50%, T_J ≥ 25°C
		1.25	—	**3.5**		Duty Cycle = 50%, T_J < 25°C
		1	—	**2.5**		Duty Cycle = 80%, Note 3
Breakdown Voltage	V_{BR}	**65**	75	—	V	3V ≤ V_{IN} ≤ 40V, I_{SW} = 5 mA
Oscillator						
Frequency	f_O	88	100	112	kHz	—
		85		**115**		—
Maximum Duty Cycle	δ_{max}	80	89	**95**	%	—
Sync Coupling Capacitor for Frequency Lock	C_{SYNC}	22	51	120	pF	V_{PP} = 3.0V
		2.2	4.7	10		V_{PP} = 40V
Input Supply Voltage						
Minimum Operating Voltage	$V_{IN(MIN)}$	—	2.7	**3.0**	V	—
Quiescent Current	I_Q	—	7	**9**	mA	3V ≤ V_{IN} ≤ 40V, V_{COMP} = 0.6V, I_{SW} = 0A
Supply Current Increase	ΔI_{IN}	—	9	20	mA	ΔI_{SW} = 1A, V_{COMP} = 1.5V

Note 1: Exceeding the absolute maximum rating may damage the device.

2: Devices are ESD sensitive. Handling precautions recommended. Human body model, 1.5 kΩ in series with 100 pF.

3: For duty cycles (δ) between 50% and 95%, minimum guaranteed switch current is given by I_{CL} = 0.833 (2 - δ) for the MIC2172.

ELECTRICAL CHARACTERISTICS (MIC3172)

Electrical Characteristics: V_{IN} = 5V; T_A = 25°C, unless otherwise specified.
Bold values indicate –40°C ≤ T_A ≤ 85°C. Note 1, Note 2

Parameter	Symbol	Min.	Typ.	Max.	Units	Conditions
Reference (Pin 2 tied to Pin 3)						
Feedback Voltage	V_{FB}	1.224	1.240	1.264	V	—
		1.214	—	**1.274**		—
Feedback Voltage Line Regulation	$\Delta V_{FB(LINE)}$	—	0.07	—	%/V	3V ≤ V_{IN} ≤ 40V
Feedback Bias Current	I_{FB}	—	310	750	nA	—
		—	—	**1100**		—
Error Amplifier						
Transconductance	$\Delta I_{COMP}/\Delta V_{FB}$	3.0	3.9	6.0	µA/mV	ΔI_{COMP} = ±25 µA
		2.4	—	**7.0**		
Voltage Gain	$\Delta V_{COMP}/\Delta V_{FB}$	500	800	2000	V/V	0.9V ≤ V_{COMP} ≤ 1.4V
Output Current	I_{COMP}	125	175	350	µA	V_{COMP} = 1.5V
		100	—	**400**		
Output Swing	$V_{COMP(MAX)}$	1.8	2.1	2.3	V	High Clamp, V_{FB} = 1V
	$V_{COMP(MIN)}$	0.25	0.35	0.52		Low Clamp, V_{FB} = 1.5V
Compensation Pin Threshold	V_{COMP_TH}	0.8	0.9	1.08	V	Duty Cycle = 0
		0.6	—	**1.25**		

© 2019 Microchip Technology Inc.

ELECTRICAL CHARACTERISTICS (MIC3172) (CONTINUED)

Electrical Characteristics: V_{IN} = 5V; T_A = 25°C, unless otherwise specified.
Bold values indicate –40°C ≤ T_A ≤ 85°C. Note 1, Note 2

Parameter	Symbol	Min.	Typ.	Max.	Units	Conditions
Output Switch						
ON Resistance	$R_{SW(ON)}$	—	0.76	1	Ω	I_{SW} = 1A, V_{FB} = 0.8V
		—	—	**1.1**		
Current Limit	I_{CL}	**1.25**	—	**3**	A	Duty Cycle = 50%, T_J ≥ 25°C
		1.25	—	**3.5**		Duty Cycle = 50%, T_J < 25°C
		1	—	**2.5**		Duty Cycle = 80%, Note 3
Breakdown Voltage	V_{BR}	**65**	75	—	V	3V ≤ V_{IN} ≤ 40V, I_{SW} = 5 mA
Oscillator						
Frequency	f_O	88	100	112	kHz	—
		85	—	**115**		—
Maximum Duty Cycle	δ_{max}	80	89	**95**	%	—
Input Supply Voltage						
Minimum Operating Voltage	$V_{IN(MIN)}$	—	2.7	**3.0**	V	—
Quiescent Current	I_Q	—	7	**9**	mA	3V ≤ V_{IN} ≤ 40V, V_{COMP} = 0.6V, I_{SW} = 0
Supply Current Increase	ΔI_{IN}	—	9	20	mA	ΔI_{SW} = 1A, V_{COMP} = 1.5V
Enable Input Threshold	V_{EN_TH}	**0.4**	1.2	**2.4**	V	—
Enable Input Current	I_{EN}	–1	0	**1**	µA	V_{EN} = 0V
		—	2	**10**		V_{EN} = 2.4V

Note 1: Devices are ESD sensitive. Handling precautions required.

2: Specification for packaged product only.

3: For duty cycles (δ) between 50% and 95%, minimum guaranteed switch current is given by I_{CL} = 0.833 (2 - δ) for the MIC3172.

© 2019 Microchip Technology Inc.

TEMPERATURE SPECIFICATIONS (Note 1)

Parameters	Symbol	Min.	Typ.	Max.	Units	Conditions
Temperature Ranges						
Operating Ambient Temperature Range	T_A	–40	—	+85	°C	—
Operating Junction Temperature Range	T_J	–40	—	+125	°C	—
Maximum Junction Temperature	$T_{J(ABSMAX)}$	—	—	+150	°C	—
Storage Temperature Range	T_S	–65	—	+150	°C	—
Lead Temperature	—	—	—	+300	°C	Soldering, 10 sec.
Package Thermal Resistances						
Thermal Resistance 8-Lead PDIP	θ_{JA}	—	130	—	°C/W	—
Thermal Resistance 8-Lead SOIC	θ_{JA}	—	120	—		—

Note 1: The maximum allowable power dissipation is a function of ambient temperature, the maximum allowable junction temperature and the thermal resistance from junction to air (i.e., T_A, T_J, θ_{JA}). Exceeding the maximum allowable power dissipation will cause the device operating junction temperature to exceed the maximum +125°C rating. Sustained junction temperatures above +125°C can impact the device reliability.

© 2019 Microchip Technology Inc.

2.0 TYPICAL PERFORMANCE CURVES

Note: The graphs and tables provided following this note are a statistical summary based on a limited number of samples and are provided for informational purposes only. The performance characteristics listed herein are not tested or guaranteed. In some graphs or tables, the data presented may be outside the specified operating range (e.g., outside specified power supply range) and therefore outside the warranted range.

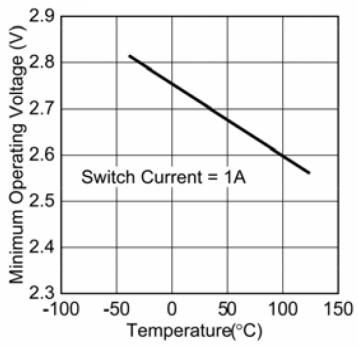

FIGURE 2-1: *Minimum Operating Voltage (MIC2172) vs. Temperature.*

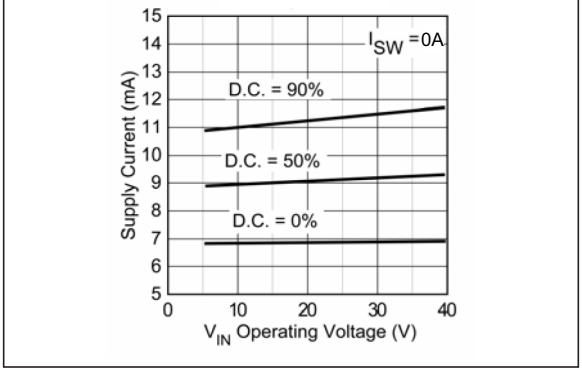

FIGURE 2-4: *Supply Current vs. Operating Voltage.*

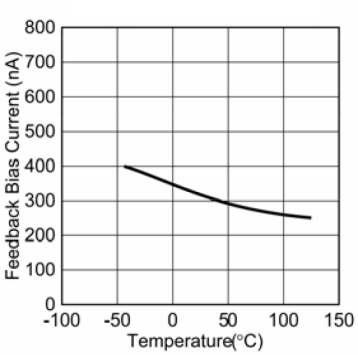

FIGURE 2-2: *Feedback Bias Current vs. Temperature.*

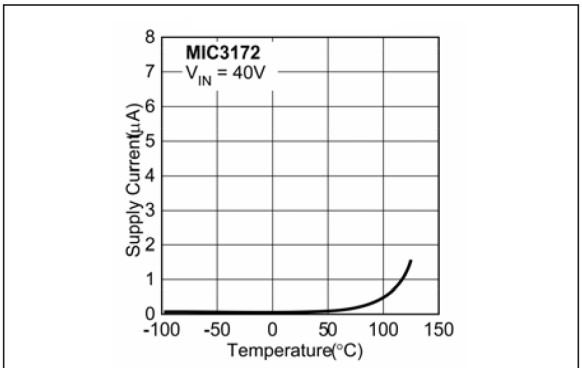

FIGURE 2-5: *Supply Current (Shutdown Mode) vs. Temperature.*

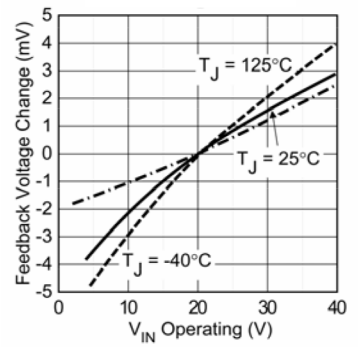

FIGURE 2-3: *Feedback Voltage Line Regulation.*

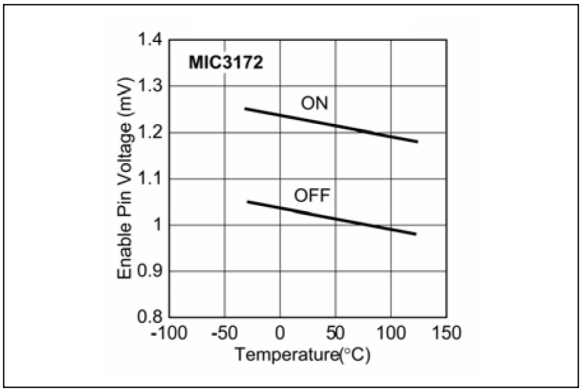

FIGURE 2-6: *Enable Threshold Voltage vs. Temperature.*

© 2019 Microchip Technology Inc.

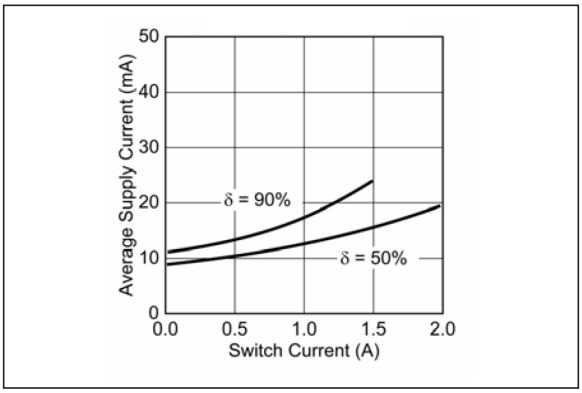

FIGURE 2-7: *Average Supply Current vs. Switch Current.*

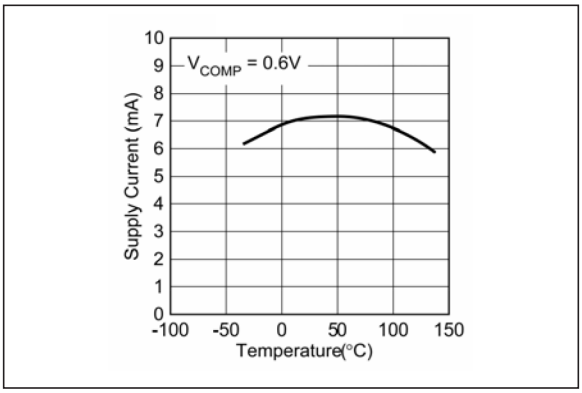

FIGURE 2-10: *Supply Current vs. Temperature.*

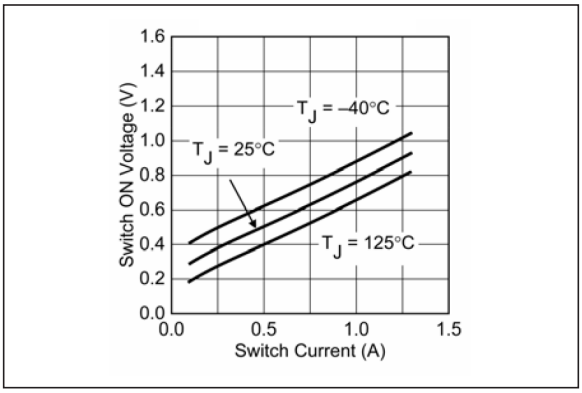

FIGURE 2-8: *Switch ON Voltage vs. Switch Current.*

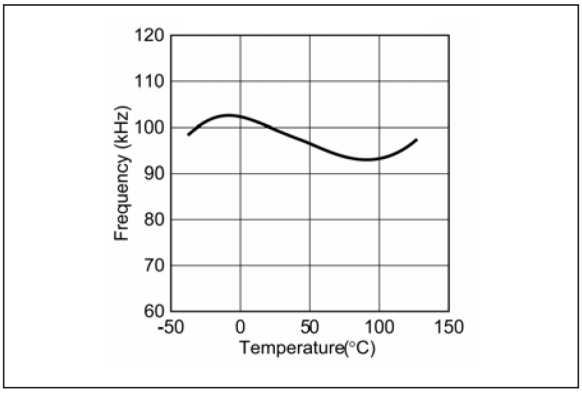

FIGURE 2-11: *Oscillator Frequency vs. Temperature.*

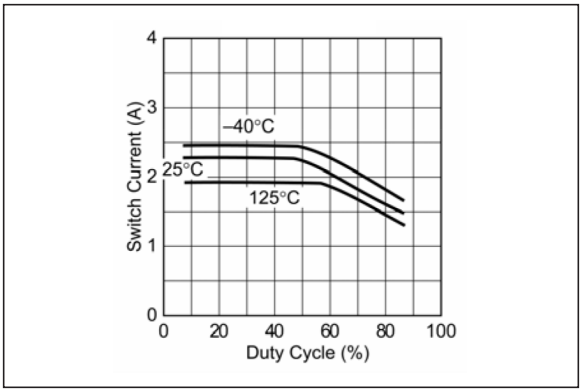

FIGURE 2-9: *Switch Current Limit vs. Duty Cycle.*

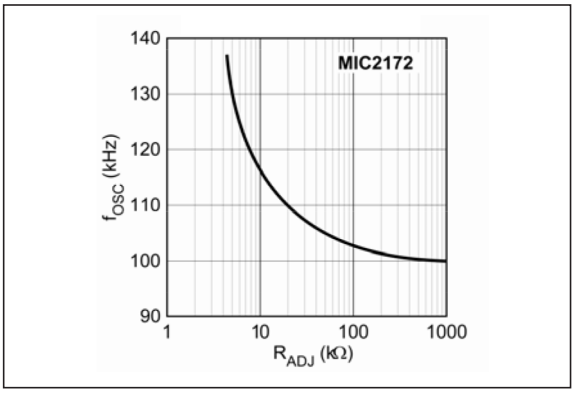

FIGURE 2-12: *Oscillator Frequency vs. Adjusting Resistance.*

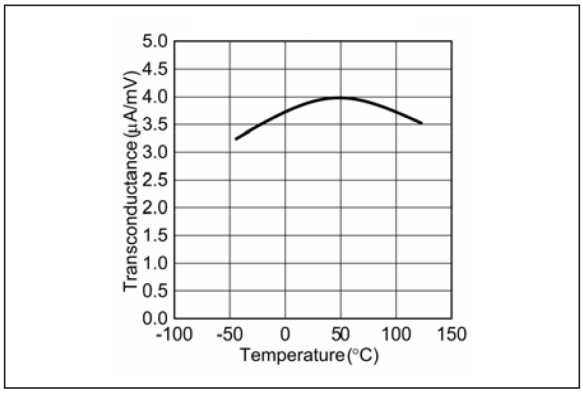

FIGURE 2-13: *Error Amplifier Gain vs. Temperature.*

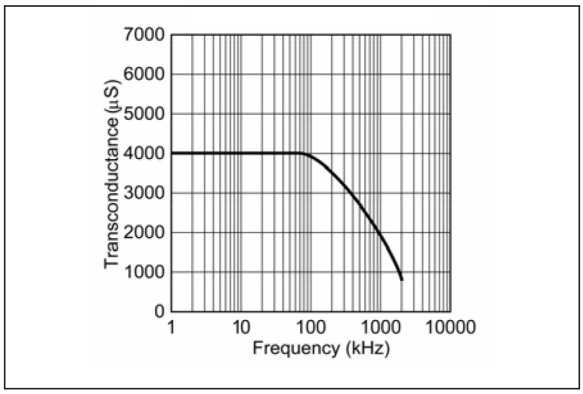

FIGURE 2-14: *Error Amplifier Gain vs. Frequency.*

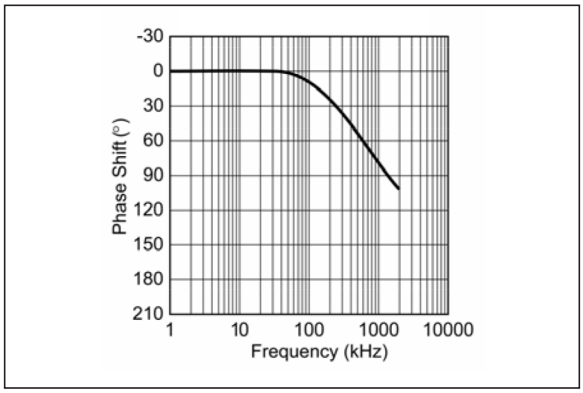

FIGURE 2-15: *Error Amplifier Phase vs. Frequency.*

© 2019 Microchip Technology Inc.

3.0 PIN DESCRIPTIONS

The descriptions of the pins are listed in Table 3-1.

TABLE 3-1: PIN FUNCTION TABLE

Pin Number	Pin Name	Description
1	SGND	Signal Ground: Internal analog circuit ground. Connect directly to the input filter capacitor for proper operation (see Section 5.0, Applications Information). Keep separate from power grounds.
2	COMP	Frequency Compensation: Output of transconductance type error amplifier. Primary function is for loop stabilization. Can also be used for output voltage, soft-start, and current limit tailoring.
3	FB	Feedback: Inverting input of error amplifier. Connect to external resistive divider to set switching regulator output voltage.
4 (MIC2172)	SYNC	Synchronization/Frequency Adjust: Capacitively coupled input signal greater than device's free running frequency (up to 135 kHz) will lock device's oscillator on falling edge. Oscillator frequency can be trimmed up to 135 kHz by adding a resistor to ground. If unused, pin must float (no connection).
4 (MIC3172)	EN	Enable: Apply TTL high or connect to VIN to enable the regulator. Apply TTL low or connect to ground to disable the regulator. Device draws only leakage current (<1 µA) when disabled.
5	VIN	Supply Voltage: 3.0V to 40V
6	PGND2	Power Ground #2: One of two NPN power switch emitters with 0.3Ω current sense resistor in series. Required. Connect to external inductor or input voltage ground depending on circuit topology.
7	VSW	Power Switch Collector: Collector of NPN switch. Connect to external inductor or input voltage depending on circuit topology.
8	PGND1	Power Ground #1: One of two NPN power switch emitters with 0.3 Ω current sense resistor in series. Optional. For maximum power capability connect to PGND2. Floating pin reduces current limit by a factor of two.

4.0 FUNCTIONAL DESCRIPTION

Refer to Functional Block Diagrams section.

4.1 Internal Power

The MIC2172/3172 operates when V_{IN} is ≥ 2.6V (and V_{EN} ≥ 2.0V for the MIC3172). An internal 2.3V regulator supplies biasing to all internal circuitry including a precision 1.24V band gap reference.

The enable control (MIC3172 only) enables or disables the internal regulator which supplies power to all other internal circuitry.

4.2 PWM Operation

The 100 kHz oscillator generates a signal with a duty cycle of approximately 90%. The current-mode comparator output is used to reduce the duty cycle when the current amplifier output voltage exceeds the error amplifier output voltage. The resulting PWM signal controls a driver which supplies base current to output transistor Q1.

4.3 Current Mode Advantages

The MIC2172/3172 operates in current mode rather than voltage mode. There are three distinct advantages to this technique. Feedback loop compensation is greatly simplified because inductor current sensing removes a pole from the closed loop response. Inherent cycle-by-cycle current limiting greatly improves the power switch reliability and provides automatic output current limiting. Finally, current-mode operation provides automatic input voltage feed forward which prevents instantaneous input voltage changes from disturbing the output voltage setting.

4.4 Anti-Saturation

The anti-saturation diode (D1) increases the usable duty cycle range of the MIC2172/3172 by eliminating the base to collector stored charge which would delay Q1's turnoff.

4.5 Compensation

Loop stability compensation of the MIC2172/3172 can be accomplished by connecting an appropriate RC network from either COMP to circuit ground (Typical Application Circuits) or COMP to FB.

The error amplifier output (COMP) is also useful for soft start and current limiting. Because the error amplifier output is a transconductance type, the output impedance is relatively high which means the output voltage can be easily clamped or adjusted externally.

© 2019 Microchip Technology Inc.

5.0 APPLICATIONS INFORMATION

5.1 Using the MIC3172 Enable Control (New Designs)

For new designs requiring enable/shutdown control, connect EN to a TTL or CMOS control signal (Figure 5-1). The very low driver current requirement ensures compatibility regardless of the driver or gate used.

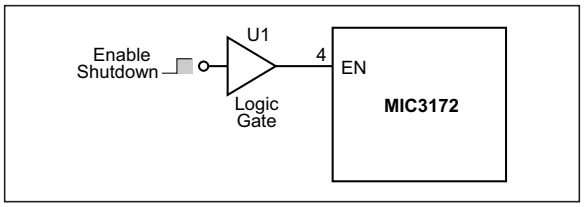

FIGURE 5-1: *MIC3172 TTL Enable/Shutdown.*

5.2 Using the MIC3172 in LT1172 Applications

The MIC3172 can be used in most original LT1172 applications by adapting the MIC3172's enable/shutdown feature to the existing LT1172 circuit.

Unlike the LT1172 which can be shutdown by reducing the voltage on pin 2 (V_C) below 0.15V, the MIC3172 has a dedicated enable/shutdown pin. To replace the LT1172 with the MIC3172, determine if the LT1172's shutdown feature is used.

5.2.1 CIRCUITS WITHOUT SHUTDOWN

If the shutdown feature is not being used, connect EN to V_{IN} to continuously enable the MIC3172 or use an MIC2172 with SYNC open (Figure 5-2).

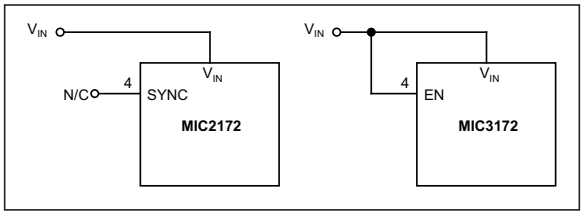

FIGURE 5-2: *MIC2172/3172 Always Enabled.*

5.2.2 CIRCUITS WITH SHUTDOWN

If shutdown was used in the original LT1172 application, connect EN to a logic gate that produces a TTL logic level output signal that matches the shutdown signal. The MIC3172 will be enabled by a logic high input and shutdown with a logic low input (Figure 5-3). The actual components performing the functions of U1 and Q1 may vary according to the original application.

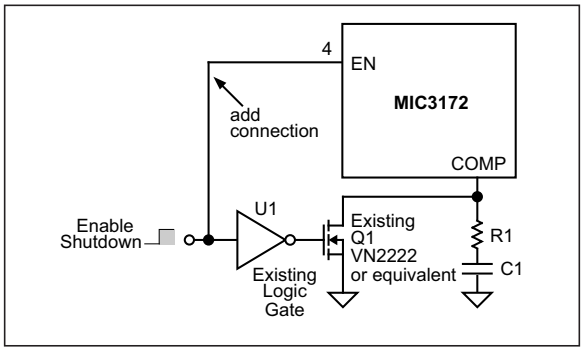

FIGURE 5-3: *Adapting to the LT1172 Socket.*

By using the MIC3172, U1 and Q1 shown in Figure 5-3 can be eliminated, reducing the total components count.

5.3 Synchronizing the MIC2172

Using several unsynchronized switching regulators in the same circuit will cause beat frequencies to appear on the inputs and outputs. These beat frequencies can be very low making them difficult to filter.

The MIC2172 can be synchronized to a single master frequency avoiding the possibility of undesirable beat frequencies in multiple regulator circuits. The master frequency can be an external oscillator or a designated master MIC2172. The master frequency should be 1.05 to 1.20 times the slave's 100 kHz nominal frequency to guarantee synchronization.

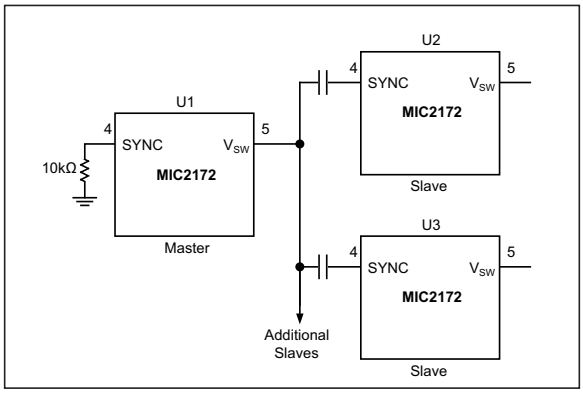

FIGURE 5-4: *Master/Slave Synchronization.*

Figure 5-4 shows a typical application where several MIC2172 operate from the same supply voltage. U1 is used as the master and U1's oscillator frequency is increased above U2's and U3's by connecting a resistor from SYNC to ground. U2-SYNC and U3-SYNC are capacitively coupled to the master's output (V_{SW}). The slaves lock to the negative (falling edge) of U1's VSW pin output waveform.

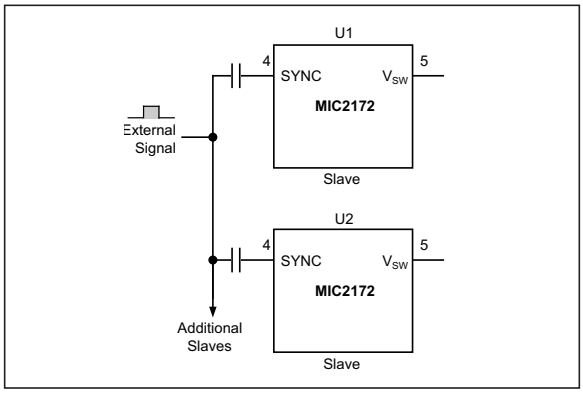

FIGURE 5-5: *External Synchronization.*

Care must be exercised to ensure that the master MIC2172 is always operating in continuous mode.

Figure 5-5 shows how one or more MIC2172 can be locked to an external reference frequency. The slaves lock to the negative (falling edge) of the external reference waveform.

5.4 Soft-Start

A diode coupled capacitor from COMP to circuit ground slows the output voltage rise at turn on (Figure 5-6).

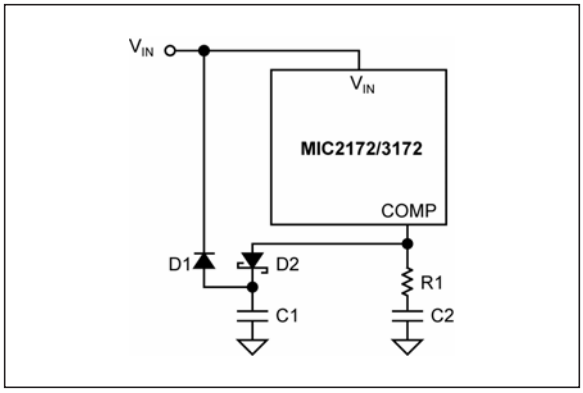

FIGURE 5-6: *Soft-Start.*

The additional time it takes for the error amplifier to charge the capacitor corresponds to the time it takes the output to reach regulation. Diode D1 discharges C1 when V_{IN} is removed.

Another soft start circuit is shown in Figure 5-7. The circuit uses capacitor C1 to control the output rise time by providing feedback from the output to the FB pin. The output voltage starts to rise when the MIC3172 regulator starts switching. This is the dv/dt of the output will force a current through capacitor C1, which flows through the lower feedback resistor, R2, increasing the voltage on the FB pin. This increased voltage on the FB pin reduces the duty cycle at the VSW pin, limiting the turn on time of the output. Increasing the value of C1 causes the output voltage to rise more slowly. Diode D1 is reverse biased in normal operation and prevents C1 from appearing in parallel with the upper voltage divider resistor, which would affect stability and transient response. Zener diode D2 clamps the voltage seen by the feedback pin and provides a discharge path for C1 when the power supply is turned off.

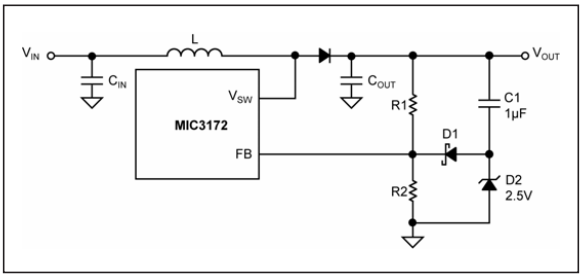

FIGURE 5-7: *Additional Soft-Start Circuit.*

This circuit only limits the dv/dt of the output when the boost converter is running. It will not decrease the dv/dt or the initial inrush caused by applying the input voltage. Figure 5-8 shows the turn on without a soft-start circuit and Figure 5-9 shows how the soft-start circuit reduces inrush and prevents output voltage overshoot.

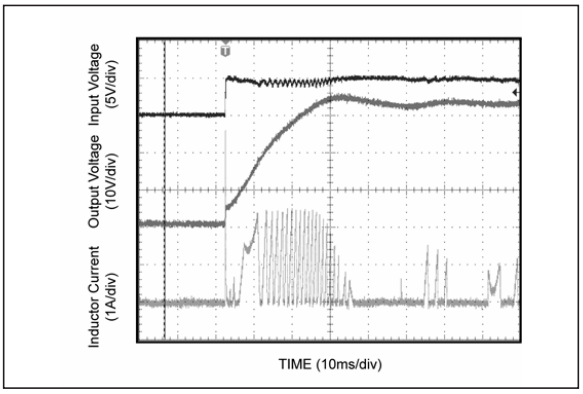

FIGURE 5-8: *Without Soft-Start.*

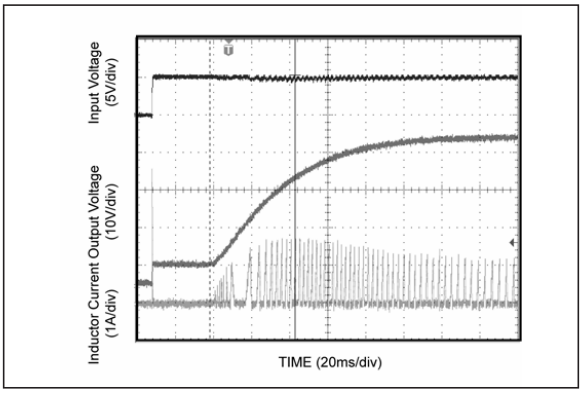

FIGURE 5-9: *With Soft-Start.*

© 2019 Microchip Technology Inc.

5.5 Current Limit

For designs demanding less output current than the MIC2172/3172 is capable of delivering, PGND1 can be left open reducing the current capability of Q1 by one-half.

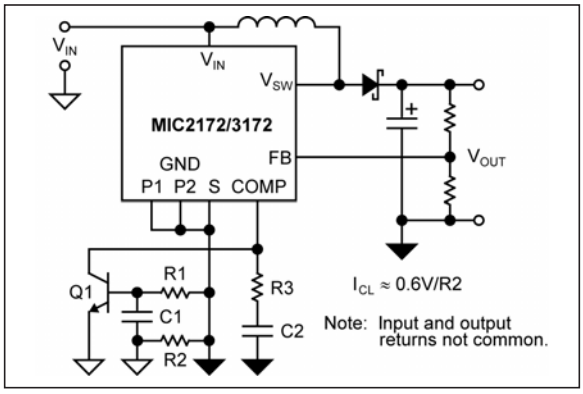

FIGURE 5-10: *Current Limit.*

Alternatively, the maximum current limit of the MIC2172/3172 can be reduced by adding a voltage clamp to the COMP output (Figure 5-10). This feature can be useful in applications requiring either a complete shutdown of Q1's switching action or a form of current fold back limiting. This use of the COMP output does not disable the oscillator, amplifiers or other circuitry, therefore the supply current is never less than approximately 5 mA.

5.6 Thermal Management

For the best reliability, the MIC2172/3172 should avoid prolonged operation with junction temperatures near the rated maximum. The junction temperature is determined by first calculating the power dissipation of the device. For the MIC2172/3172, the total power dissipation is the sum of the device operating losses and power switch losses.

The device operating losses are the DC losses associated with biasing all of the internal functions plus the losses of the power switch driver circuitry. The DC losses are calculated from the supply voltage (V_{IN}) and device supply current (I_Q). The MIC2172/3172 supply current is almost constant regardless of the supply voltage (see Section 1.0, Electrical Characteristics). The driver section losses (not including the switch) are a function of supply voltage, power switch current, and duty cycle.

EQUATION 5-1:

$$P_{(BIAS+DRIVER)} = (V_{IN}I_Q) + V_{IN}\left[I_{SW}\left(\frac{\Delta I_{IN} \times \delta}{\Delta I_{SW}}\right)\right]$$

Where:

$P_{(BIAS + DRIVER)}$ =	Device operating losses
V_{IN} =	Supply Voltage
I_Q =	Quiescent supply current
I_{SW} =	Average power switch current during on-time
ΔI_{IN} =	Supply current increase (max). See **Section 1.0 "Electrical Characteristics"**
ΔI_{SW} =	Switch current increase
δ =	Duty cycle

EQUATION 5-2:

For boost converter,

$$\delta = \frac{V_{OUT} + V_F - V_{IN}}{V_{OUT} + V_F}$$

Where:

V_{OUT} =	Output voltage
V_F =	Diode forward voltage drop

As a practical example refer to Figure 5-12 in Typical Application Circuits, the operating parameters are as below:

V_{IN} = 5.0V

I_Q = 0.006A

I_{SW} = 0.625A

ΔI_{IN} = 20 mA

ΔI_{SW} = 1A

δ = 60% (0.6)

Then:

EQUATION 5-3:

$$P_{(BIAS+DRIVER)} = (5 \times 0.006) + 5\left[0.625\left(\frac{0.02 \times 0.6}{1}\right)\right]$$

$$P_{(BIAS+DRIVER)} = 0.068W$$

Power switch dissipation calculations are greatly simplified by making two assumptions which are usually fairly accurate. First, the majority of losses in the power switch are due to on-time conduction losses. To find these losses, assign a resistance value to the collector/emitter terminals of the device using the saturation voltage versus collector current curves (see Section 2.0, Typical Performance Curves). Power switch losses are calculated by modeling the switch as a resistor with the switch duty cycle modifying the average power dissipation.

EQUATION 5-4:

$$P_{SW} = (I_{SW})^2 \times R_{SW} \times \delta$$

Where:

R_{SW} = 1Ω

Then:

$P_{SW} = (0.625)^2 \times 1 \times 0.6$

$P_{SW} = 0.234W$

$P_{(TOTAL)} = 0.068 + 0.234$

$P_{(TOTAL)} = 0.302W$

The junction temperature for any semiconductor is calculated using the following:

EQUATION 5-5:

$$T_J = T_A + P_{(TOTAL)} \times \theta_{JA}$$

Where:

T_J =	Junction temperature
T_A =	Ambient temperature (maximum)
$P_{(TOTAL)}$ =	Total power dissipation
θ_{JA} =	Junction to ambient thermal resistance

For the practical example:

$T_A = 70°C$

$\theta_{JA} = 130°C/W$ (for plastic DIP)

Then:

$T_J = 70 + 0.30 \times 130$

$T_J = 109°C$

This junction temperature is below the rated maximum of 150°C.

5.7 Grounding

Refer to Figure 5-11. Heavy lines indicate high-current ground paths.

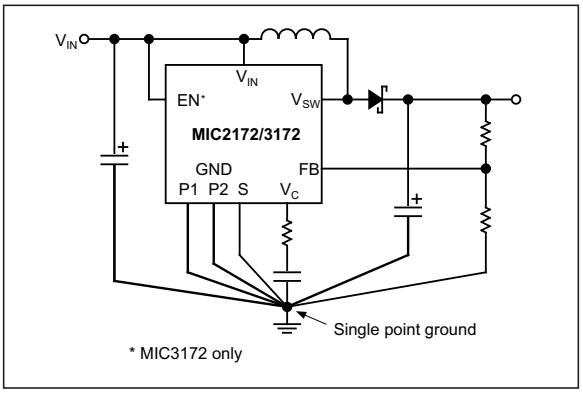

FIGURE 5-11: *Single Point Ground.*

A single point ground is strongly recommended for proper operation.

The signal ground, compensation network ground, and feedback network connections are sensitive to minor voltage variations. The input and output capacitor grounds and power ground conductors will exhibit voltage drop when carrying large currents. Keep the sensitive circuit ground traces separate from the power ground traces. Small voltage variations applied to the sensitive circuits can prevent the MIC2172/3172 or any switching regulator from functioning properly.

5.8 Applications and Design Hints

Access to both the collector and emitter(s) of the NPN power switch makes the MIC2172/3172 extremely versatile and suitable for use in most PWM power supply topologies.

5.8.1 BOOST CONVERSION

Refer to Figure 5-12 for a typical boost conversion application where a +5V logic supply is available and a +12V at 0.14A output is required.

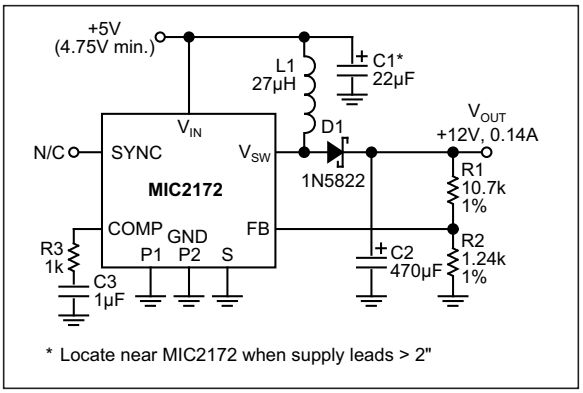

FIGURE 5-12: *5V to 12V Boost Converter.*

The first step in designing a boost converter is determining whether inductor L1 will cause the converter to operate in either continuous or

© 2019 Microchip Technology Inc.

discontinuous mode. Discontinuous mode is preferred because the feedback control of the converter is simpler.

When L1 discharges its current completely during the MIC2172/3172's off-time, it is operating in discontinuous mode.

L1 is operating in continuous mode if it does not discharge completely before the MIC2172/3172 power switch is turned on again.

5.8.2 DISCONTINUOUS MODE DESIGN

Given the maximum output current, solve Equation 5-6 to determine whether the device can operate in discontinuous mode without initiating the internal device current limit.

EQUATION 5-6:

$$I_{OUT} \le \frac{\left(\frac{I_{CL}}{2}\right) \times V_{IN}}{V_{OUT}}$$

$$\delta = \frac{V_{OUT} + V_F - V_{IN}}{V_{OUT} + V_F}$$

Where:

I_{CL} =	Internal switch current limit
I_{CL} =	1.25A when δ < 50%
I_{CL} =	0.833 (2 - δ) when δ ≥ 50%
I_{OUT} =	Maximum output current
V_{IN} =	Minimum input voltage
δ =	Duty cycle for boost converter in CRM
V_{OUT} =	Required output voltage
V_F =	Diode forward voltage drop

For the example in Figure 5-12:

I_{OUT} = 0.14A

I_{CL} = 1.147A

V_{IN} = 4.75V (minimum)

δ = 0.623

V_{OUT} = 12.0V

V_F = 0.6V

Then:

EQUATION 5-7:

$$I_{OUT} \le \frac{\left(\frac{1.147}{2}\right) \times 4.75}{12}$$

$$I_{OUT} \le 0.227A$$

This value is greater than the 0.14A output current requirement so we can proceed to find the inductance value of L1.

EQUATION 5-8:

$$\frac{V_{IN} \times \delta}{I_{CL} \times f_{SW}} \le L1 \le \frac{(V_{IN})^2 \times \delta}{2 \times P_{OUT} \times f_{SW}}$$

Where:

P_{OUT} =	12 x 0.14 = 1.68W
f_{SW} =	1.10^5 kHz (100 kHz)

For our practical example:

EQUATION 5-9:

$$\frac{4.75 \times 0.623}{1.147 \times 1 \times 10^5} \le L1 \le \frac{(4.75)^2 \times 0.623}{2 \times 1.68 \times 1 \times 10^5}$$

$$25.80\mu H \le L1 \le 41.83\mu H \text{ (Use 27 µH)}$$

Equation 5-10 solves for L1's maximum current value.

EQUATION 5-10:

$$I_{L1(PEAK)} = \frac{V_{IN} \times t_{ON}}{L1}$$

Where:

t_{ON} =	$\delta / f_{SW} = 6.23 \times 10^{-6}$ sec.

EQUATION 5-11:

$$I_{L1(PEAK)} = \frac{4.75 \times 6.23 \times 10^{-6}}{27 \times 10^{-6}} = 1.096A$$

Use a 27 µH inductor with a peak current rating of at least 1.4A.

© 2019 Microchip Technology Inc.

5.9 Flyback Conversion

Flyback converter topology may be used in low power applications where voltage isolation is required or whenever the input voltage can be less than or greater than the output voltage. As with the step-up converter the inductor (transformer primary) current can be continuous or discontinuous. Discontinuous operation is recommended.

Figure 5-13 shows a practical flyback converter design using the MIC3172.

5.9.1 SWITCH OPERATION

During Q1's on time (Q1 is the internal NPN transistor see block diagrams), energy is stored in T1's primary inductance. During Q1's off time, stored energy is partially discharged into C4 (output filter capacitor). Careful selection of a low ESR capacitor for C4 may provide satisfactory output ripple voltage making additional filter stages unnecessary.

C1 (input capacitor) may be reduced or eliminated if the MIC3172 is located near a low impedance voltage source

5.9.2 OUTPUT DIODE

The output diode allows T1 to store energy in its primary inductance (D2 nonconducting) and release energy into C4 (D2 conducting). The low forward voltage drop of a Schottky diode minimizes power loss in D2.

5.9.3 FREQUENCY COMPENSATION

A simple frequency compensation network consisting of R3 and C2 prevents output oscillations.

High impedance output stages (transconductance type) in the MIC2172/3172 often permit simplified loop stability solutions to be connected to circuit ground, although a more conventional technique of connecting the components from the error amplifier output to its inverting input is also possible.

5.9.4 VOLTAGE CLIPPER

Care must be taken to minimize T1's leakage inductance, otherwise it may be necessary to incorporate the voltage clipper consisting of D1, R4, and C3 to avoid second breakdown (failure) of the MIC3172's power NPN Q1.

5.9.5 ENABLE/SHUTDOWN

The MIC3172 includes the enable/shutdown feature. When the device is shutdown, total supply current is less than 1 µA. This is ideal for battery applications where portions of a system are powered only when needed. If this feature is not required, simply connect EN to VIN or to a TTL high voltage.

5.9.6 DISCONTINUOUS MODE DESIGN

When designing a discontinuous flyback converter, first determine whether the device can safely handle the peak primary current demand placed on it by the output power. Equation 5-12 finds the maximum duty cycle required for a given input voltage and output power. If the duty cycle is greater than 0.8, discontinuous operation cannot be used.

EQUATION 5-12:

$$\delta \geq \frac{2 \times P_{OUT}}{I_{CL} \times V_{IN(MIN)}}$$

Where:

P_{OUT} = 5.0V × 0.25A = 1.25W
V_{IN} = 4.0V to 6.0V
I_{CL} = 1.25A when δ < 50%

Then:

EQUATION 5-13:

$$\delta \geq \frac{2 \times 1.25}{1.25 \times 4}$$

$$\delta \geq 0.5 \quad \text{(Use 0.55)}$$

The slightly higher duty cycle value is used to overcome circuit inefficiencies. A few iterations of Equation 5-12 may be required if the duty cycle is found to be greater than 50%.

Calculate the maximum transformer turns ratio **a**, or N_{PRI}/N_{SEC}, that will guarantee safe operation of the MIC2172/3172 power switch.

© 2019 Microchip Technology Inc.

EQUATION 5-14:

$$a \leq \frac{V_{CE} \times F_{CE} - V_{IN(MAX)}}{V_{SEC}}$$

Where:

a =	Maximum transformer turn ratio
V_{CE} =	Power switch collector to emitter maximum voltage
F_{CE} =	Safety derating factor (0.8 for most commercial and industrial applications)
$V_{IN(MAX)}$ =	maximum input voltage
V_{SEC} =	transformer secondary voltage (V_{OUT} + V_F)

For the practical example:

V_{CE} = 65V max. for the MIC2172/3172

F_{CE} = 0.8

V_{SEC} = 5.6V

Then:

EQUATION 5-15:

$$a \leq \frac{65 \times 0.8 - 6.0}{5.6}$$

$$a \leq 8.2143$$

Next, calculate the maximum primary inductance required to store the needed output energy with the power switch duty cycle of 55%.

EQUATION 5-16:

$$L_{PRI} \leq \frac{0.5 \times f_{SW} \times V_{IN(MIN)}^{2} \times t_{ON}^{2}}{P_{OUT}}$$

Where:

L_{PRI} =	Maximum primary inductance
f_{SW} =	Device switching frequency (100 kHz)
$V_{IN(MIN)}$ =	Minimum input voltage
t_{ON} =	Power switch on time

Then:

EQUATION 5-17:

$$L_{PRI} \leq \frac{0.5 \times 1 \times 10^{5} \times 4.0^{2} (5.5 \times 10^{-6})^{2}}{1.25}$$

$$L_{PRI} \leq 19.36 \mu H$$

Use an 18 µH primary inductance to overcome circuit inefficiencies.

To complete the design the inductance value of the secondary is found which will guarantee that the energy stored in the transformer during the power switch on time will be completed discharged into the output during the off time. This is necessary when operating in discontinuous mode.

EQUATION 5-18:

$$L_{SEC} \leq \frac{0.5 \times f_{SW} \times V_{SEC}^{2} \times t_{OFF}^{2}}{P_{OUT}}$$

Where:

L_{SEC} =	Maximum secondary inductance
t_{OFF} =	Power switch off time

Then:

EQUATION 5-19:

$$L_{SEC} \leq \frac{0.5 \times 1 \times 10^{5} \times 5.6^{2} (4.5 \times 10^{-6})^{2}}{1.25}$$

$$L_{SEC} \leq 25.4 \mu H$$

© 2019 Microchip Technology Inc.

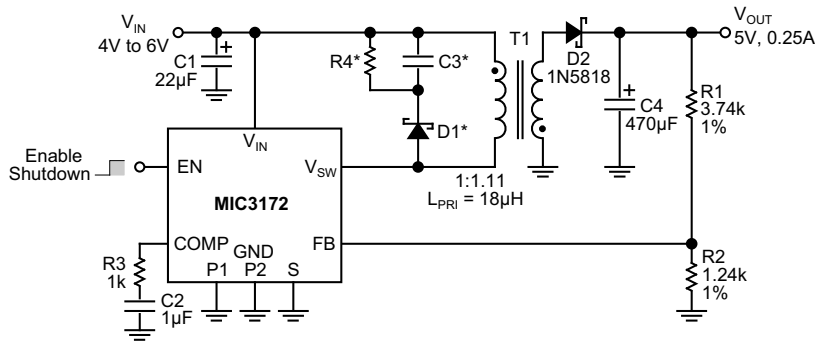

* Optional voltage clipper (may be req'd if T1 leakage inductance too high)

FIGURE 5-13: *MIC3172 5V 0.25A Flyback Converter.*

Finally, recalculate the transformer turns ratio to ensure that it is less than the value earlier found in Equation 5-14.

EQUATION 5-20:

$$a = \sqrt{\frac{L_{PRI}}{L_{SEC}}}$$

Then:

EQUATION 5-21:

$$a = \sqrt{\frac{1.8 \times 10^{-5}}{2.54 \times 10^{-5}}}$$

a = 0.89

Use 0.9 (same as 1:1.11)

This ratio is less than the ratio calculated in Equation 5-14. When specifying the transformer it is necessary to know the primary peak current which must be withstood without saturating the transformer core.

EQUATION 5-22:

$$I_{PEAK(PRI)} = \frac{V_{IN(MIN)} \times t_{ON}}{L_{PRI}}$$

So:

EQUATION 5-23:

$$I_{PEAK(PRI)} = \frac{4.0 \times 5.5 \times 10^{-6}}{18 \times 10^{-6}}$$

$I_{PEAK(PRI)}$ = 1.22A

Now find the minimum reverse voltage requirement for the output rectifier. This rectifier must have an average current rating greater than the maximum output current of 0.25A.

EQUATION 5-24:

$$V_{BR} \geq \frac{V_{IN(MAX)} + (V_{OUT} \times a)}{F_{BR} \times a}$$

Where:

V_{BR} =	Output rectifier maximum peak reverse voltage rating
a =	Transformer turns ratio (0.9)
F_{BR} =	Reverse voltage safety derating factor (0.8)

Then:

EQUATION 5-25:

$$V_{BR} \geq \frac{6.0 + (5.0 \times 0.9)}{0.8 \times 0.9}$$

$$V_{BR} \geq 14.58V$$

© 2019 Microchip Technology Inc.

A 1N5817 will safely handle voltage and current requirements in this example.

5.10 Forward Converters

The MIC2172/3172 can be used in several circuit configurations to generate an output voltage which is less than the input voltage (buck or step-down topology). Figure 5-14 shows the MIC3172 in a voltage step-down application. Because of the internal architecture of these devices, more external components are required to implement a step-down regulator than with other devices offered by Microchip (refer to the LM257x or LM457x family of buck switchers). However, for step-down conversion requiring a transformer (forward), the MIC2172/3172 is a good choice.

A 12V to 5V step-down converter using transformer isolation (forward) is shown in Figure 5-15. Unlike the isolated flyback converter which stores energy in the primary inductance during the controller's on-time and releases it to the load during the off-time, the forward converter transfers energy to the output during the on-time, using the off-time to reset the transformer core. In the application shown, the transformer core is reset by the tertiary winding discharging T1's peak magnetizing current through D2.

For most forward converters the duty cycle is limited to 50%, allowing the transformer flux to reset with only two times the input voltage appearing across the power switch. Although during normal operation this circuit's duty cycle is well below 50%, the MIC2172 (and MIC3172) has a maximum duty cycle capability of 90%. If 90% was required during operation (start-up and high load currents), a complete reset of the transformer during the off-time would require the voltage across the power switch to be ten times the input voltage. This would limit the input voltage to 6V or less for forward converter applications.

To prevent core saturation, the application given here uses a duty cycle limiter consisting of Q1, C4 and R3. Whenever the MIC3172 exceeds a duty cycle of 50%, T1's reset winding current turns Q1 on. This action reduces the duty cycle of the MIC3172 until T1 is able to reset during each cycle.

5.11 Fluorescent Lamp Supply

An extremely useful application of the MIC3172 is generating an ac voltage for fluorescent lamps used as liquid crystal display back lighting in portable computers.

Figure 5-16 shows a complete power supply for lighting a fluorescent lamp. Transistors Q1 and Q2 together with capacitor C2 form a Royer oscillator. The Royer oscillator generates a sine wave whose frequency is determined by the series L/C circuit comprised of T1 and C2. Assuming that the MIC3172 and L1 are absent, and the transistors' emitters are grounded, circuit operation is described in **Section 5.11.1 "Oscillator Operation"**

5.11.1 OSCILLATOR OPERATION

Resistor R2 provides initial base current that turns transistor Q1 on and impresses the input voltage across one half of T1's primary winding (Pri 1). T1's feedback winding provides additional base drive (positive feedback) to Q1 forcing it well into saturation for a period determined by the Pri 1/C2 time constant. Once the voltage across C2 has reached its maximum circuit value, Q1's collector current will no longer increase. Since T1 is in series with Q1, this drop in primary current causes the flux in T1 to change and because of the mutual coupling to the feedback winding further reduces primary current eventually turning Q1 off. The primary windings now change state with the feedback winding forcing Q2 on repeating the alternate half cycle exactly as with Q1. This action produces a sinusoidal voltage wave form; whose amplitude is proportional to the input voltage, across T1's primary winding which is stepped up and capacitively coupled to the lamp.

5.11.2 LAMP CURRENT REGULATION

Initial ionization (lighting) of the fluorescent lamp requires several times the ac voltage across it than is required to sustain current through the device. The current through the lamp is sampled and regulated by the MIC3172 to achieve a given intensity. The MIC3172 uses L1 to maintain a constant average current through the transistor emitters. This current controls the voltage amplitude of the Royer oscillator and maintains the lamp current. During the negative half cycle, lamp current is rectified by D3. During the positive half cycle, lamp current is rectified by D2 through R4 and R5. R3 and C5 filter the voltage dropped across R4 and R5 to the MIC3172's feedback pin. The MIC3172 maintains a constant lamp current by adjusting its duty cycle to keep the feedback voltage at 1.24V. The intensity of the lamp is adjusted using potentiometer R5. The MIC3172 adjusts its duty cycle accordingly to bring the average voltage across R4 and R5 back to 1.24V.

© 2019 Microchip Technology Inc.

5.11.3 ON/OFF CONTROL

Especially important for battery powered applications, the lamp can be remotely or automatically turned off using the MIC3172's EN pin. The entire circuit draws less than 1 µA while shutdown.

5.11.4 EFFICIENCY

To obtain maximum circuit efficiency careful selection of Q1 and Q2 for low collector to emitter saturation voltage is a must. Inductor L1 should be chosen for minimal core and copper losses at the switching frequency of the MIC3172, and T1 should be carefully constructed from magnetic materials optimized for the output power required at the Royer oscillator frequency. Suitable inductors may be obtained from Coiltronics, Inc.

5.12 Output Voltage Setting

The MIC2172/3172 requires a resistor divider connected from the output to ground with the middle point connected to the FB pin to set the desired output voltage. The output voltage is set by Equation 5-26.

EQUATION 5-26:

$$V_{OUT} = V_{REF}\left(\frac{R1}{R2} + 1\right)$$

Where:

V_{REF} = 1.24V internal reference voltage
R1 = Upper feedback resistor
R2 = Lower feedback resistor

A typical value of R1 can be in the range of 3 kΩ to 15 kΩ. If R1 is too large, it may allow noise to be introduced into the voltage feedback loop. If R1 is too small in value, it will decrease the efficiency of the switching regulator, especially at light loads. Once R1 is selected, R2 can be calculated using Equation 5-27.

EQUATION 5-27:

$$R2 = \frac{V_{REF} \times R1}{V_{OUT} - V_{REF}}$$

© 2019 Microchip Technology Inc.

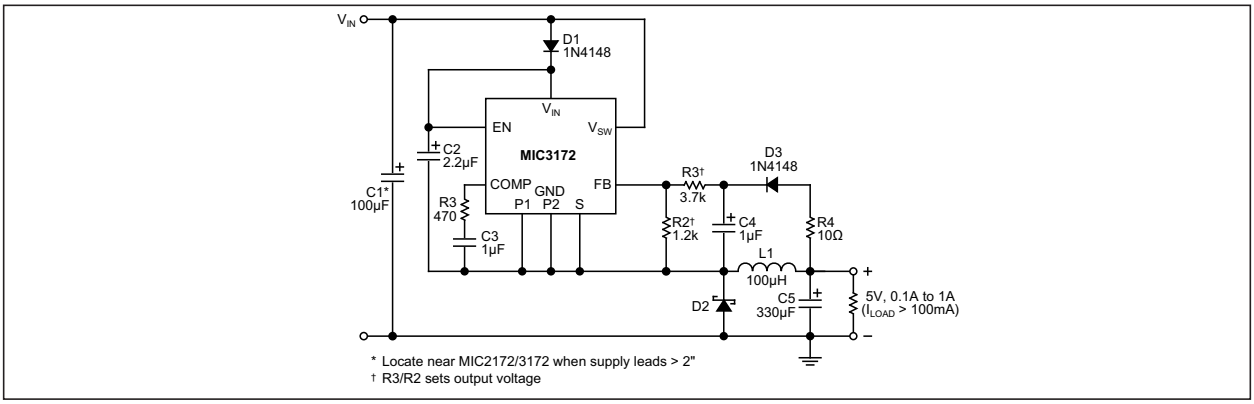

FIGURE 5-14: *Step-Down or Buck Regulator.*

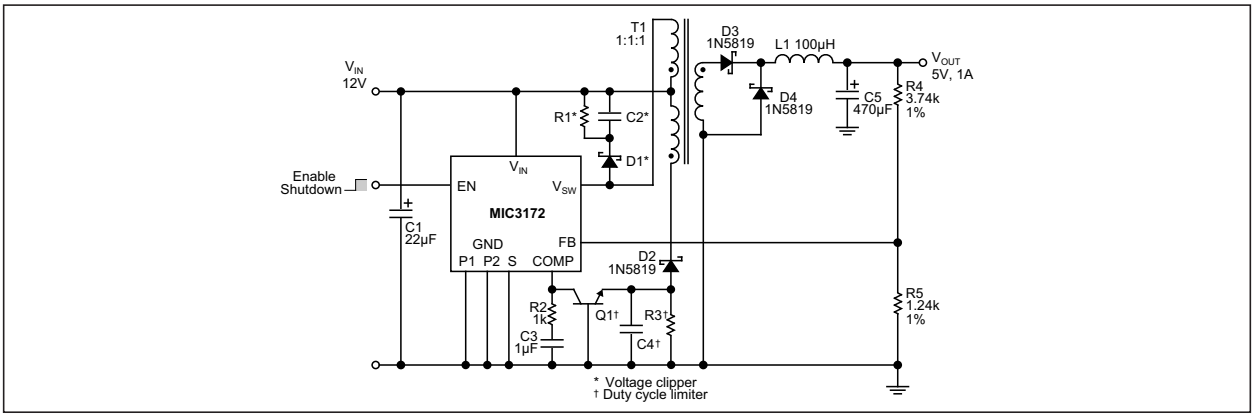

FIGURE 5-15: *12V to 5V Forward Converter.*

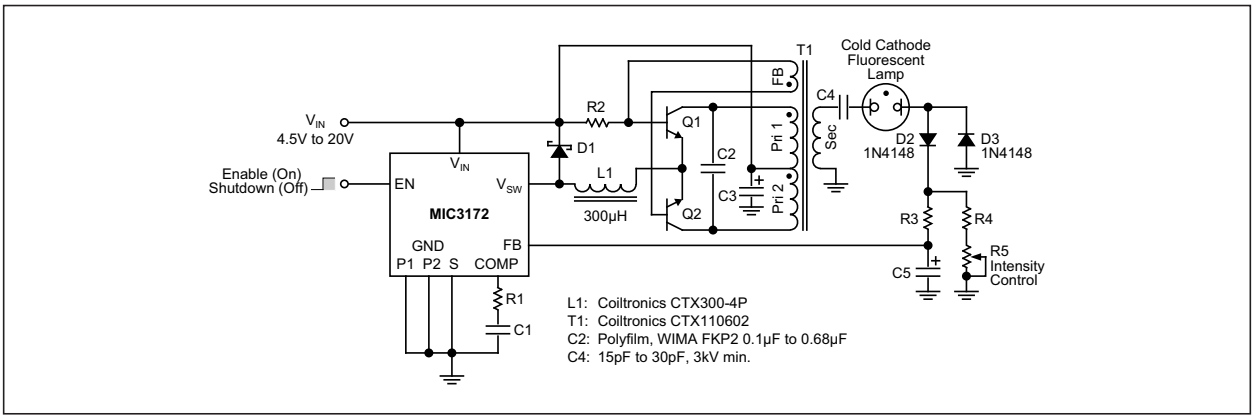

FIGURE 5-16: *LCD Backlight Fluorescent Lamp Supply.*

6.0 PACKAGING INFORMATION

6.1 Package Marking Information

8-Lead SOIC*



Example

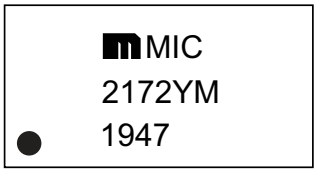

8-Lead PDIP*



Example

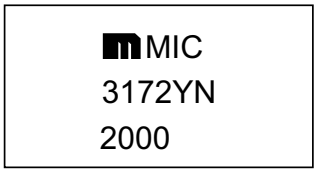

Legend:	XX...X	Product code or customer-specific information
	Y	Year code (last digit of calendar year)
	YY	Year code (last 2 digits of calendar year)
	WW	Week code (week of January 1 is week ‘01’)
	NNN	Alphanumeric traceability code
	(e3)	Pb-free JEDEC® designator for Matte Tin (Sn)
	*	This package is Pb-free. The Pb-free JEDEC designator ((e3)) can be found on the outer packaging for this package.
	●, ▲, ▼	Pin one index is identified by a dot, delta up, or delta down (triangle mark).
Note:	In the event the full Microchip part number cannot be marked on one line, it will be carried over to the next line, thus limiting the number of available characters for customer-specific information. Package may or may not include the corporate logo.	
	Underbar (_) and/or Overbar (¯) symbol may not be to scale.	

© 2019 Microchip Technology Inc.

8-Lead PDIP Package Outline and Recommended Land Pattern

TITLE
8 LEAD PDIP PACKAGE OUTLINE & RECOMMENDED LAND PATTERN

DRAWING #	PDIP-8LD-PL-1	UNIT	INCH
Lead Frame	Copper	Lead Finish	Matte Tin

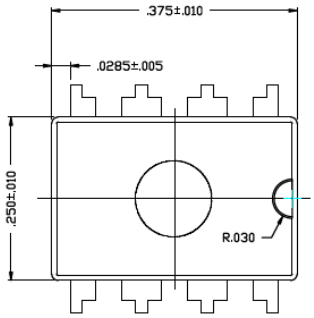

TOP VIEW

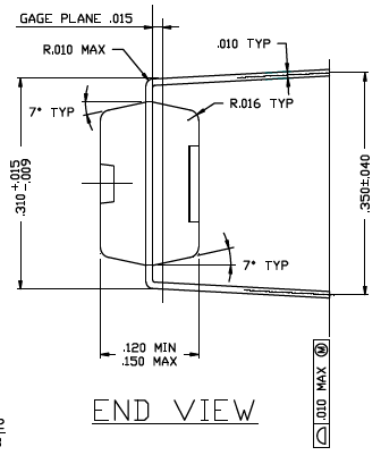

END VIEW

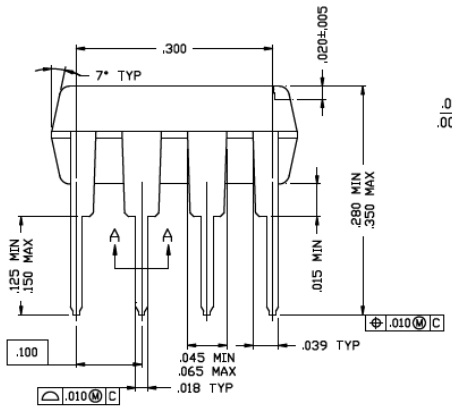

SIDE VIEW

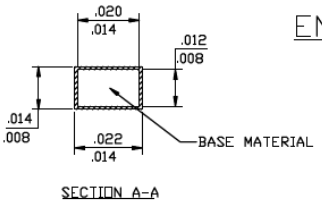

SECTION A-A

Note: For the most current package drawings, please see the Microchip Packaging Specification located at http://www.microchip.com/packaging.

8-Lead SOIC Package Outline and Recommended Land Pattern

TITLE
8 LEAD SOICN PACKAGE OUTLINE & RECOMMENDED LAND PATTERN

DRAWING #	SOICN-8LD-PL-1	UNIT	INCH [MM]

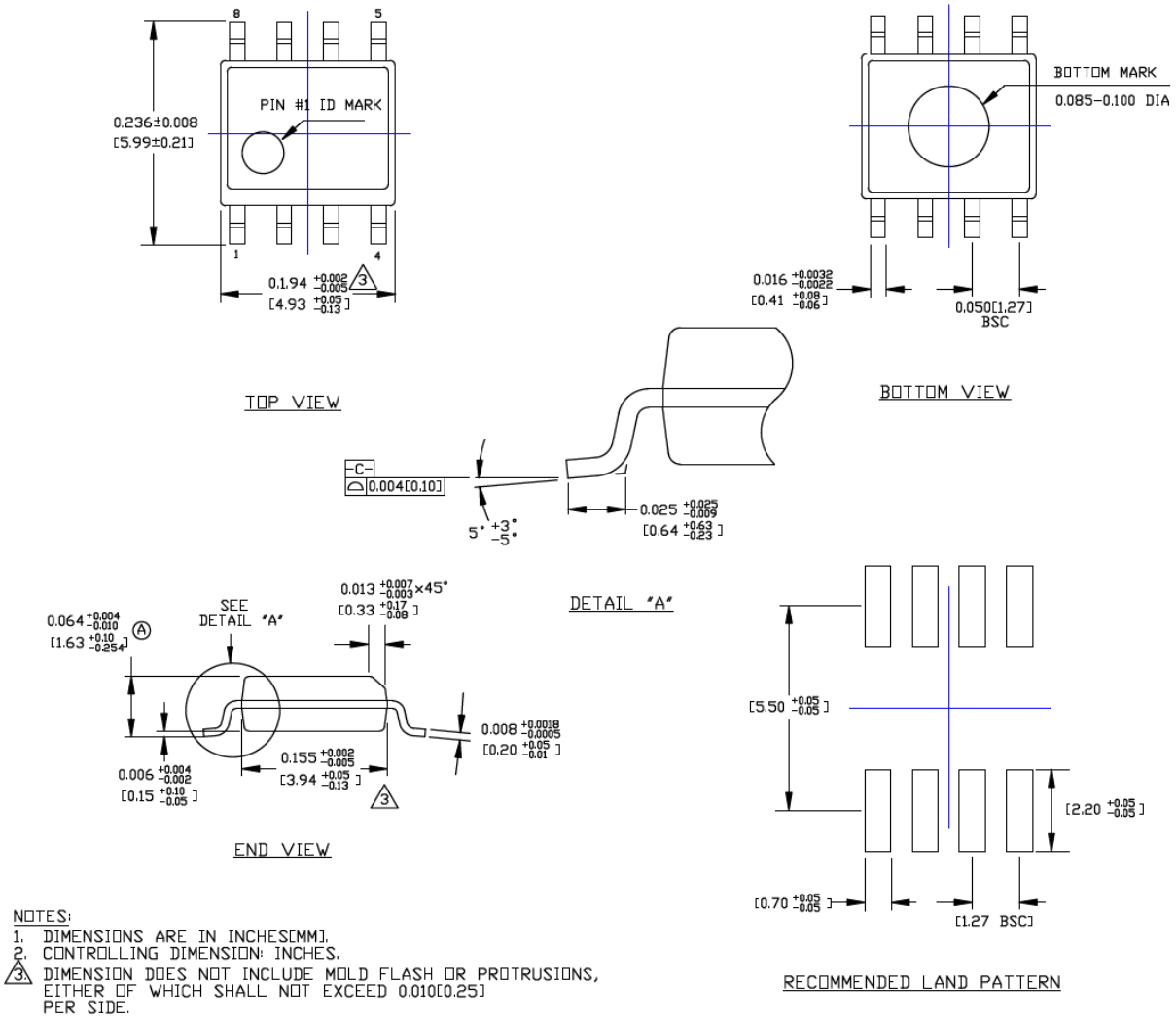

NOTES:
1. DIMENSIONS ARE IN INCHES[MM].
2. CONTROLLING DIMENSION: INCHES.
3. DIMENSION DOES NOT INCLUDE MOLD FLASH OR PROTRUSIONS, EITHER OF WHICH SHALL NOT EXCEED 0.010[0.25] PER SIDE.

Note: For the most current package drawings, please see the Microchip Packaging Specification located at http://www.microchip.com/packaging.

© 2019 Microchip Technology Inc.

APPENDIX A: REVISION HISTORY

Revision A (July 2019)

- Converted Micrel document MIC2172/3172 to Microchip data sheet DS20006208A.
- Minor text changes throughout.
- Updated **Section 1.0 "Electrical Characteristics"** tables for both MIC2172/3172.
- Updated Equation 5-1 through Equation 5-25 and also added a new **Section 5.12 "Output Voltage Setting"** in the **Section 5.0 "Applications Information"**.

NOTES:

© 2018 Microchip Technology Inc.

PRODUCT IDENTIFICATION SYSTEM

To order or obtain information, e.g., on pricing or delivery, contact your local Microchip representative or sales office.

PART NO.	X	XX	–XX
Device	Junction Temperature Range	Package Option	Media Type

Device:	MIC2172: 100 kHz, 1.25A Switching Regulator (External frequency synchronization or frequency adjustment) MIC3172: 100 kHz, 1.25A Switching Regulator (Enable/shutdown control input)
Junction Temperature Range:	Y = –40°C to +125°C
Package:	M = 8-Lead SOIC (Pb-Free) N = 8-Lead PDIP (Pb-Free)
Media Type:	Blank = 95/Tube (SOIC Package) Blank = 50/Tube (PDIP Package) TR = 2,500/Reel

Examples:

a) MIC2172YM:	100 kHz, 1.25A Switching Regulator, –40°C to +125°C Junction Temperature Range, Pb-Free, 8-Lead SOIC Package, 95/Tube
b) MIC3172YN:	100 kHz, 1.25A Switching Regulator, –40°C to +125°C Junction Temperature Range, Pb-Free, 8-Lead PDIP Package, 50/Tube
c) MIC2172YM-TR:	100 kHz, 1.25A Switching Regulator, –40°C to +125°C Junction Temperature Range, Pb-Free, 8-Lead SOIC Package, 2,500/Reel
d) MIC3172YM-TR:	100 kHz, 1.25A Switching Regulator, –40°C to +125°C Junction Temperature Range, Pb-Free, 8-Lead SOIC Package, 2,500/Reel

Note 1: Tape and Reel identifier only appears in the catalog part number description. This identifier is used for ordering purposes and is not printed on the device package. Check with your Microchip Sales Office for package availability with the Tape and Reel option.

NOTES:

© 2019 Microchip Technology Inc.

Note the following details of the code protection feature on Microchip devices:

- Microchip products meet the specification contained in their particular Microchip Data Sheet.
- Microchip believes that its family of products is one of the most secure families of its kind on the market today, when used in the intended manner and under normal conditions.
- There are dishonest and possibly illegal methods used to breach the code protection feature. All of these methods, to our knowledge, require using the Microchip products in a manner outside the operating specifications contained in Microchip's Data Sheets. Most likely, the person doing so is engaged in theft of intellectual property.
- Microchip is willing to work with the customer who is concerned about the integrity of their code.
- Neither Microchip nor any other semiconductor manufacturer can guarantee the security of their code. Code protection does not mean that we are guaranteeing the product as "unbreakable."

Code protection is constantly evolving. We at Microchip are committed to continuously improving the code protection features of our products. Attempts to break Microchip's code protection feature may be a violation of the Digital Millennium Copyright Act. If such acts allow unauthorized access to your software or other copyrighted work, you may have a right to sue for relief under that Act.

Information contained in this publication regarding device applications and the like is provided only for your convenience and may be superseded by updates. It is your responsibility to ensure that your application meets with your specifications. MICROCHIP MAKES NO REPRESENTATIONS OR WARRANTIES OF ANY KIND WHETHER EXPRESS OR IMPLIED, WRITTEN OR ORAL, STATUTORY OR OTHERWISE, RELATED TO THE INFORMATION, INCLUDING BUT NOT LIMITED TO ITS CONDITION, QUALITY, PERFORMANCE, MERCHANTABILITY OR FITNESS FOR PURPOSE**.** Microchip disclaims all liability arising from this information and its use. Use of Microchip devices in life support and/or safety applications is entirely at the buyer's risk, and the buyer agrees to defend, indemnify and hold harmless Microchip from any and all damages, claims, suits, or expenses resulting from such use. No licenses are conveyed, implicitly or otherwise, under any Microchip intellectual property rights unless otherwise stated.

Trademarks

The Microchip name and logo, the Microchip logo, Adaptec, AnyRate, AVR, AVR logo, AVR Freaks, BesTime, BitCloud, chipKIT, chipKIT logo, CryptoMemory, CryptoRF, dsPIC, FlashFlex, flexPWR, HELDO, IGLOO, JukeBlox, KeeLoq, Kleer, LANCheck, LinkMD, maXStylus, maXTouch, MediaLB, megaAVR, Microsemi, Microsemi logo, MOST, MOST logo, MPLAB, OptoLyzer, PackeTime, PIC, picoPower, PICSTART, PIC32 logo, PolarFire, Prochip Designer, QTouch, SAM-BA, SenGenuity, SpyNIC, SST, SST Logo, SuperFlash, Symmetricom, SyncServer, Tachyon, TempTrackr, TimeSource, tinyAVR, UNI/O, Vectron, and XMEGA are registered trademarks of Microchip Technology Incorporated in the U.S.A. and other countries.

APT, ClockWorks, The Embedded Control Solutions Company, EtherSynch, FlashTec, Hyper Speed Control, HyperLight Load, IntelliMOS, Libero, motorBench, mTouch, Powermite 3, Precision Edge, ProASIC, ProASIC Plus, ProASIC Plus logo, Quiet-Wire, SmartFusion, SyncWorld, Temux, TimeCesium, TimeHub, TimePictra, TimeProvider, Vite, WinPath, and ZL are registered trademarks of Microchip Technology Incorporated in the U.S.A.

Adjacent Key Suppression, AKS, Analog-for-the-Digital Age, Any Capacitor, AnyIn, AnyOut, BlueSky, BodyCom, CodeGuard, CryptoAuthentication, CryptoAutomotive, CryptoCompanion, CryptoController, dsPICDEM, dsPICDEM.net, Dynamic Average Matching, DAM, ECAN, EtherGREEN, In-Circuit Serial Programming, ICSP, INICnet, Inter-Chip Connectivity, JitterBlocker, KleerNet, KleerNet logo, memBrain, Mindi, MiWi, MPASM, MPF, MPLAB Certified logo, MPLIB, MPLINK, MultiTRAK, NetDetach, Omniscient Code Generation, PICDEM, PICDEM.net, PICkit, PICtail, PowerSmart, PureSilicon, QMatrix, REAL ICE, Ripple Blocker, SAM-ICE, Serial Quad I/O, SMART-I.S., SQI, SuperSwitcher, SuperSwitcher II, Total Endurance, TSHARC, USBCheck, VariSense, ViewSpan, WiperLock, Wireless DNA, and ZENA are trademarks of Microchip Technology Incorporated in the U.S.A. and other countries.

SQTP is a service mark of Microchip Technology Incorporated in the U.S.A.

The Adaptec logo, Frequency on Demand, Silicon Storage Technology, and Symmcom are registered trademarks of Microchip Technology Inc. in other countries.

GestIC is a registered trademark of Microchip Technology Germany II GmbH & Co. KG, a subsidiary of Microchip Technology Inc., in other countries.

All other trademarks mentioned herein are property of their respective companies.

© 2019, Microchip Technology Incorporated, All Rights Reserved.

ISBN: 978-1-5224-4723-8

For information regarding Microchip's Quality Management Systems, please visit www.microchip.com/quality.

Worldwide Sales and Service

AMERICAS

Corporate Office
2355 West Chandler Blvd.
Chandler, AZ 85224-6199
Tel: 480-792-7200
Fax: 480-792-7277
Technical Support:
http://www.microchip.com/support
Web Address:
www.microchip.com

Atlanta
Duluth, GA
Tel: 678-957-9614
Fax: 678-957-1455

Austin, TX
Tel: 512-257-3370

Boston
Westborough, MA
Tel: 774-760-0087
Fax: 774-760-0088

Chicago
Itasca, IL
Tel: 630-285-0071
Fax: 630-285-0075

Dallas
Addison, TX
Tel: 972-818-7423
Fax: 972-818-2924

Detroit
Novi, MI
Tel: 248-848-4000

Houston, TX
Tel: 281-894-5983

Indianapolis
Noblesville, IN
Tel: 317-773-8323
Fax: 317-773-5453
Tel: 317-536-2380

Los Angeles
Mission Viejo, CA
Tel: 949-462-9523
Fax: 949-462-9608
Tel: 951-273-7800

Raleigh, NC
Tel: 919-844-7510

New York, NY
Tel: 631-435-6000

San Jose, CA
Tel: 408-735-9110
Tel: 408-436-4270

Canada - Toronto
Tel: 905-695-1980
Fax: 905-695-2078

ASIA/PACIFIC

Australia - Sydney
Tel: 61-2-9868-6733

China - Beijing
Tel: 86-10-8569-7000

China - Chengdu
Tel: 86-28-8665-5511

China - Chongqing
Tel: 86-23-8980-9588

China - Dongguan
Tel: 86-769-8702-9880

China - Guangzhou
Tel: 86-20-8755-8029

China - Hangzhou
Tel: 86-571-8792-8115

China - Hong Kong SAR
Tel: 852-2943-5100

China - Nanjing
Tel: 86-25-8473-2460

China - Qingdao
Tel: 86-532-8502-7355

China - Shanghai
Tel: 86-21-3326-8000

China - Shenyang
Tel: 86-24-2334-2829

China - Shenzhen
Tel: 86-755-8864-2200

China - Suzhou
Tel: 86-186-6233-1526

China - Wuhan
Tel: 86-27-5980-5300

China - Xian
Tel: 86-29-8833-7252

China - Xiamen
Tel: 86-592-2388138

China - Zhuhai
Tel: 86-756-3210040

ASIA/PACIFIC

India - Bangalore
Tel: 91-80-3090-4444

India - New Delhi
Tel: 91-11-4160-8631

India - Pune
Tel: 91-20-4121-0141

Japan - Osaka
Tel: 81-6-6152-7160

Japan - Tokyo
Tel: 81-3-6880- 3770

Korea - Daegu
Tel: 82-53-744-4301

Korea - Seoul
Tel: 82-2-554-7200

Malaysia - Kuala Lumpur
Tel: 60-3-7651-7906

Malaysia - Penang
Tel: 60-4-227-8870

Philippines - Manila
Tel: 63-2-634-9065

Singapore
Tel: 65-6334-8870

Taiwan - Hsin Chu
Tel: 886-3-577-8366

Taiwan - Kaohsiung
Tel: 886-7-213-7830

Taiwan - Taipei
Tel: 886-2-2508-8600

Thailand - Bangkok
Tel: 66-2-694-1351

Vietnam - Ho Chi Minh
Tel: 84-28-5448-2100

EUROPE

Austria - Wels
Tel: 43-7242-2244-39
Fax: 43-7242-2244-393

Denmark - Copenhagen
Tel: 45-4450-2828
Fax: 45-4485-2829

Finland - Espoo
Tel: 358-9-4520-820

France - Paris
Tel: 33-1-69-53-63-20
Fax: 33-1-69-30-90-79

Germany - Garching
Tel: 49-8931-9700

Germany - Haan
Tel: 49-2129-3766400

Germany - Heilbronn
Tel: 49-7131-72400

Germany - Karlsruhe
Tel: 49-721-625370

Germany - Munich
Tel: 49-89-627-144-0
Fax: 49-89-627-144-44

Germany - Rosenheim
Tel: 49-8031-354-560

Israel - Ra'anana
Tel: 972-9-744-7705

Italy - Milan
Tel: 39-0331-742611
Fax: 39-0331-466781

Italy - Padova
Tel: 39-049-7625286

Netherlands - Drunen
Tel: 31-416-690399
Fax: 31-416-690340

Norway - Trondheim
Tel: 47-7288-4388

Poland - Warsaw
Tel: 48-22-3325737

Romania - Bucharest
Tel: 40-21-407-87-50

Spain - Madrid
Tel: 34-91-708-08-90
Fax: 34-91-708-08-91

Sweden - Gothenberg
Tel: 46-31-704-60-40

Sweden - Stockholm
Tel: 46-8-5090-4654

UK - Wokingham
Tel: 44-118-921-5800
Fax: 44-118-921-5820

© 2019 Microchip Technology Inc.

Looking for pricing, stock, or lifecycle information?

Click below to explore more details on WIN SOURCE:

- View MIC3172YM on WIN SOURCE
- Microchip Technology Information

Optimize Your Supply Chain with WIN SOURCE Solutions

- Global Sourcing Solution
- Obsolete Management
- Cost Control Management
- Shortage Management
- Alternative Solution
- Excess Inventory Management