WINSOURCE ELECTRONICS

THE DATASHEET OF

RMK-5-2251+

X5 Frequency Multiplier

RMK-5-2251+

50Ω Output 2100 to 3000 MHz

The Big Deal

- Wide bandwidth, 1500 to 2250 output
- High harmonic suppression, F4, 52 dBc; F6, 56 dBc
- Small size, 0.25 x 0.31 x 0.16”



CASE STYLE: TT1224

Product Overview

Mini-Circuits’ RMK-5-2251+ frequency multiplier provides a multiplication factor of 5 converting input frequencies from 300 to 450 MHz into output frequencies from 1500 to 2250 MHz, supporting applications including synthesizers, local oscillators, satellite up and down converters and more. The unit supports input power of +17 dBm with conversion loss of 21 dB and excellent harmonic suppression. The multiplier comes housed in a miniature surface-mount package (0.25 x 0.31 x 0.16”) ideal for dense circuit board layouts.

Feature	Advantages
Wide bandwidth	With an output frequency range spanning 1500-2250 MHz, this multiplier covers a wide range of applications.
Excellent harmonic suppression • F4, 52 dBc • F6, 56 dBc	Reduces spurious signals and the need for additional filtering.
Low conversion loss, 21 dB	With a low conversion loss, the unit produces higher output power signal level and less amplification may be used.
Wide input power range, +12 to +17 dBm	Wide input power signal range accommodates different input signal levels while still maintaining a low conversion loss.
Low cost	Provides an easy, cost-effective solution for generating high-frequency signals from a lower frequency signal source.
Small size	Measuring only 0.25 x 0.31 x 0.16”, the RMK-5-2251+ saves space in crowded PCB layouts.

Notes
A. Performance and quality attributes and conditions not expressly stated in this specification document are intended to be excluded and do not form a part of this specification document.
B. Electrical specifications and performance data contained in this specification document are based on Mini-Circuit’s applicable established test performance criteria and measurement instructions.
C. The parts covered by this specification document are subject to Mini-Circuits standard limited warranty and terms and conditions (collectively, “Standard Terms”); Purchasers of this part are entitled to the rights and benefits contained therein. For a full statement of the Standard Terms and the exclusive rights and remedies thereunder, please visit Mini-Circuits’ website at www.minicircuits.com/MCLStore/terms.jsp

X5 Frequency Multiplier

RMK-5-2251+

50Ω Output 1500 to 2250 MHz



Generic photo used for illustration purposes only

CASE STYLE: TT1224

+RoHS Compliant

The +Suffix identifies RoHS Compliance. See our web site for RoHS Compliance methodologies and qualifications

Available Tape and Reel at no extra cost

Reel Size	Devices/Reel
7"	10, 20, 50, 100, 200
13"	500

Maximum Ratings

Operating Temperature	-40°C to 85°C
Storage Temperature	-55°C to 100°C
RF Input Power	20 dBm

Permanent damage may occur if any of these limits are exceeded.

Pin Connections

INPUT	1
OUTPUT	4
GROUND	2,3,5,6

Features

- low conversion loss, 21 dB typ.
- high rejection of adjacent harmonics, 56 dBc typ.
- aqueous washable

Applications

- synthesizers
- local oscillators
- satellite up and down converters

Outline Drawing

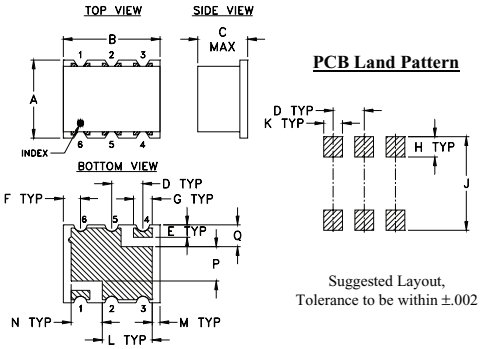

Outline Dimensions (inch / mm)

A	B	C	D	E	F	G	H
.25	.31	.16	.100	.040	.055	.060	.065
6.35	7.87	4.06	2.54	1.02	1.40	1.52	1.65

J	K	L	M	N	P	Q	wt.
.300	.060	.160	.025	.100	.110	.070	grams
7.62	1.52	4.06	0.64	2.54	2.79	1.78	0.16

Demo Board MCL P/N: TB-393
Suggested PCB Layout (PL-258)

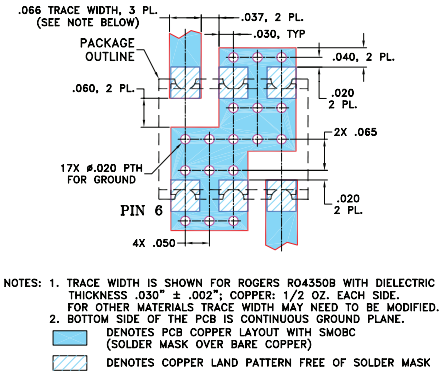

NOTES: 1. TRACE WIDTH IS SHOWN FOR ROGERS RO4350B WITH DIELECTRIC THICKNESS .030" ± .002"; COPPER: 1/2 OZ. EACH SIDE. FOR OTHER MATERIALS TRACE WIDTH MAY NEED TO BE MODIFIED.
2. BOTTOM SIDE OF THE PCB IS CONTINUOUS GROUND PLANE.

DENOTES PCB COPPER LAYOUT WITH SMOBC (SOLDER MASK OVER BARE COPPER)

DENOTES COPPER LAND PATTERN FREE OF SOLDER MASK

Electrical Specifications at 25°C

Parameter		Min.	Typ.	Max.	Unit
Multiplier Factor			5		
Frequency Range, Input (F1)		300	—	450	MHz
Frequency Range, Output (F5)		1500	—	2250	MHz
Input Power		—	17	—	dBm
Conversion Loss		—	21	24.8	dB
Harmonic Ouput*	F1	-3.5	5.3	—	-dBc
	F2	38	64	—	
	F3	-7.6	-0.34	—	
	F4	35	52	—	
	F6	35	56	—	
	F7	2.5	6.5	—	

* Harmonics of input frequency below the power level of F5

Typical Performance

Frequency Input (MHz)	Frequency Output (MHz)	Conv. Loss (dB) F5	Harmonic Rejection Below F5, (dBc) at RF Input Power 17 dBm F1	F2	F3	F4	F6	F7
300.00	1500.00	21.29	-9.07	-66.02	-2.50	-49.79	-52.79	-6.72
310.00	1550.00	20.95	-9.02	-64.33	-2.53	-53.20	-64.41	-7.42
320.00	1600.00	20.55	-9.01	-61.09	-2.44	-52.78	-63.19	-7.78
330.00	1650.00	20.35	-8.58	-62.47	-2.29	-52.01	-69.13	-7.79
335.00	1675.00	20.47	-8.03	-61.99	-1.98	-51.61	-70.09	-7.65
340.00	1700.00	20.54	-7.43	-62.35	-1.67	-51.64	-71.09	-7.78
350.00	1750.00	20.87	-6.28	-61.96	-1.14	-50.88	-70.48	-7.83
355.00	1775.00	20.89	-5.97	-62.85	-0.80	-51.30	-62.01	-7.54
360.00	1800.00	21.00	-5.65	-61.96	-0.36	-50.66	-67.29	-7.22
365.00	1825.00	20.95	-5.57	-64.33	-0.18	-51.44	-56.87	-7.03
370.00	1850.00	20.90	-5.51	-62.59	0.00	-50.06	-63.01	-6.78
375.00	1875.00	21.04	-5.24	-64.25	0.31	-50.00	-62.20	-6.51
380.00	1900.00	21.13	-4.90	-64.89	0.71	-49.59	-58.94	-6.48
390.00	1950.00	21.28	-4.09	-67.78	1.34	-49.25	-59.11	-6.48
395.00	1975.00	21.45	-3.53	-68.70	1.69	-48.97	-58.36	-6.58
400.00	2000.00	21.77	-2.84	-68.89	2.26	-48.88	-58.96	-6.59
410.00	2050.00	21.91	-2.11	-68.06	2.81	-49.48	-58.45	-7.07
420.00	2100.00	22.14	-1.47	-66.25	3.48	-49.46	-58.71	-7.34
430.00	2150.00	22.20	-0.98	-63.87	4.06	-49.67	-58.03	-7.88
435.00	2175.00	22.42	-0.46	-62.03	4.47	-50.16	-56.62	-8.21
440.00	2200.00	22.76	0.15	-60.29	4.93	-50.15	-56.72	-8.52
445.00	2225.00	22.96	0.61	-59.06	5.26	-50.43	-55.81	-8.96
450.00	2250.00	23.07	0.94	-57.99	5.64	-50.47	-55.24	-9.43

Notes

A. Performance and quality attributes and conditions not expressly stated in this specification document are intended to be excluded and do not form a part of this specification document.
B. Electrical specifications and performance data contained in this specification document are based on Mini-Circuit's applicable established test performance criteria and measurement instructions.
C. The parts covered by this specification document are subject to Mini-Circuits standard limited warranty and terms and conditions (collectively, "Standard Terms"); Purchasers of this part are entitled to the rights and benefits contained therein. For a full statement of the Standard Terms and the exclusive rights and remedies thereunder, please visit Mini-Circuits' website at www.minicircuits.com/MCLStore/terms.jsp

RMK-5-2251+
CONVERSION LOSS

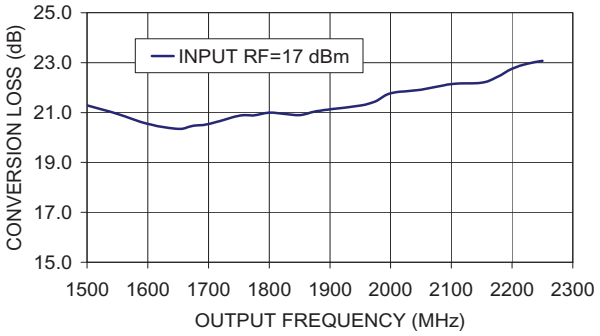

RMK-5-2251+
HARMONIC OUTPUT F1

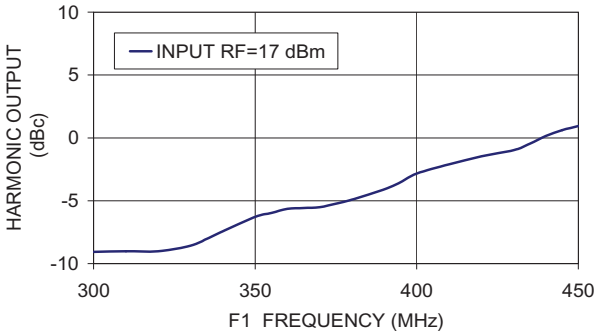

RMK-5-2251+
HARMONIC OUTPUT F2

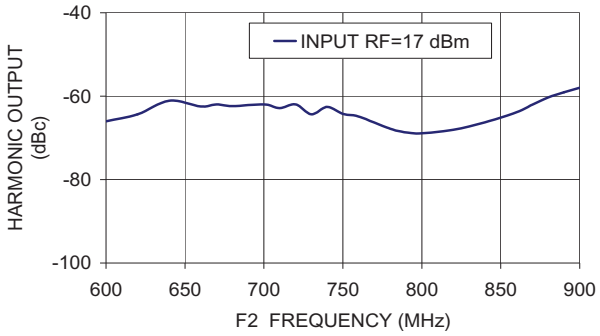

RMK-5-2251+
HARMONIC OUTPUT F3

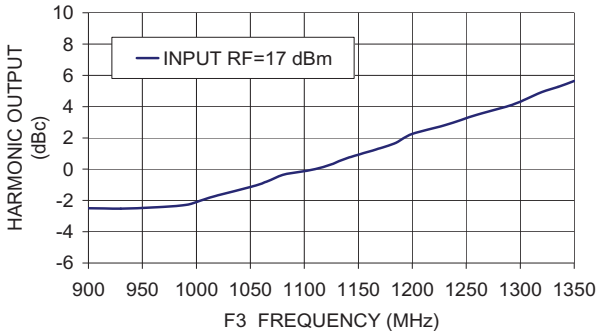

RMK-5-2251+
HARMONIC OUTPUT F4

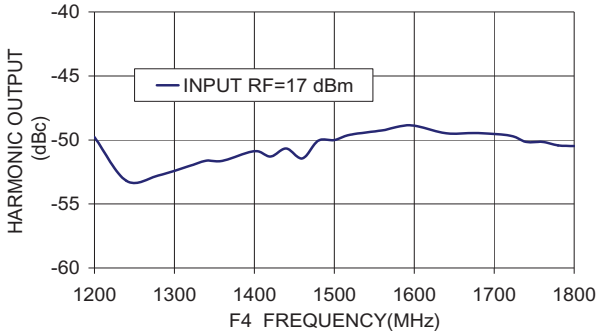

RMK-5-2251+
HARMONIC OUTPUT F6

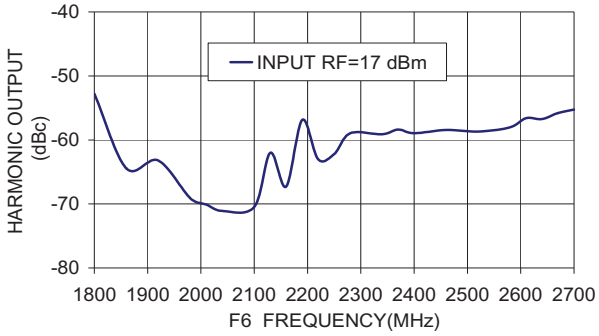

RMK-5-2251+
HARMONIC OUTPUT F7

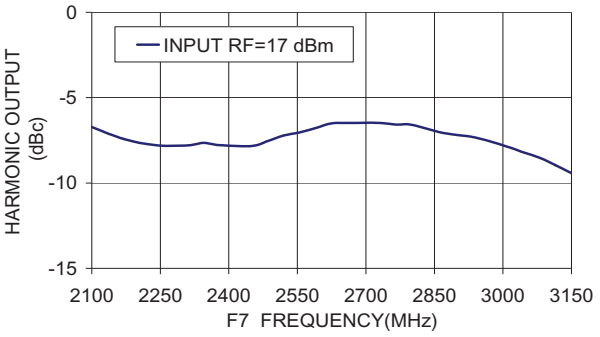

Notes
A. Performance and quality attributes and conditions not expressly stated in this specification document are intended to be excluded and do not form a part of this specification document.
B. Electrical specifications and performance data contained in this specification document are based on Mini-Circuit's applicable established test performance criteria and measurement instructions.
C. The parts covered by this specification document are subject to Mini-Circuits standard limited warranty and terms and conditions (collectively, "Standard Terms"); Purchasers of this part are entitled to the rights and benefits contained therein. For a full statement of the Standard Terms and the exclusive rights and remedies thereunder, please visit Mini-Circuits' website at www.minicircuits.com/MCLStore/terms.jsp

Frequency Multiplier (X5) RMK-5-2251+

Typical Performance Data

FREQUENCY (MHz)							CONVERSION LOSS (dB)	RF IN = +17 dBm HARMONIC OUTPUT* (-dBc)					
X1 OUTPUT	X2 OUTPUT	X3 OUTPUT	X4 OUTPUT	X5 OUTPUT	X6 OUTPUT	X7 OUTPUT	X5 OUTPUT	X1 OUTPUT	X2 OUTPUT	X3 OUTPUT	X4 OUTPUT	X6 OUTPUT	X7 OUTPUT
270	540	810	1080	1350	1620	1890	22.95	9.87	41.78	1.78	36.66	30.68	3.21
275	550	825	1100	1375	1650	1925	22.67	9.61	41.07	1.84	35.87	30.20	3.87
280	560	840	1120	1400	1680	1960	22.49	9.34	39.80	2.07	34.83	29.54	4.64
285	570	855	1140	1425	1710	1995	22.17	9.17	44.34	2.25	42.18	35.38	5.35
290	580	870	1160	1450	1740	2030	21.80	9.17	49.01	2.30	40.84	38.23	5.68
295	590	885	1180	1475	1770	2065	21.54	9.05	55.02	2.32	44.74	43.69	6.14
300	600	900	1200	1500	1800	2100	21.29	9.07	66.02	2.50	49.79	52.79	6.72
305	610	915	1220	1525	1830	2135	21.10	9.03	68.38	2.51	52.32	61.09	7.10
310	620	930	1240	1550	1860	2170	20.95	9.02	64.33	2.53	53.20	64.41	7.42
315	630	945	1260	1575	1890	2205	20.91	8.89	61.83	2.42	53.05	63.93	7.82
320	640	960	1280	1600	1920	2240	20.55	9.01	61.09	2.44	52.78	63.19	7.78
330	660	990	1320	1650	1980	2310	20.35	8.58	62.47	2.29	52.01	69.13	7.79
335	670	1005	1340	1675	2010	2345	20.47	8.03	61.99	1.98	51.61	70.09	7.65
340	680	1020	1360	1700	2040	2380	20.54	7.43	62.35	1.67	51.64	71.09	7.78
345	690	1035	1380	1725	2070	2415	20.73	6.80	62.28	1.37	51.41	73.43	7.86
350	700	1050	1400	1750	2100	2450	20.87	6.28	61.96	1.14	50.88	70.48	7.83
355	710	1065	1420	1775	2130	2485	20.89	5.97	62.85	0.80	51.30	62.01	7.54
360	720	1080	1440	1800	2160	2520	21.00	5.65	61.96	0.36	50.66	67.29	7.22
365	730	1095	1460	1825	2190	2555	20.95	5.57	64.33	0.18	51.44	56.87	7.03
370	740	1110	1480	1850	2220	2590	20.90	5.51	62.59	0.00	50.06	63.01	6.78
375	750	1125	1500	1875	2250	2625	21.04	5.24	64.25	-0.31	50.00	62.20	6.51
380	760	1140	1520	1900	2280	2660	21.13	4.90	64.89	-0.71	49.59	58.94	6.48
385	770	1155	1540	1925	2310	2695	21.21	4.56	65.18	-1.08	49.10	59.44	6.31
390	780	1170	1560	1950	2340	2730	21.28	4.09	67.78	-1.34	49.25	59.11	6.48
395	790	1185	1580	1975	2370	2765	21.45	3.53	68.70	-1.69	48.97	58.36	6.58
400	800	1200	1600	2000	2400	2800	21.77	2.84	68.89	-2.26	48.88	58.96	6.59
405	810	1215	1620	2025	2430	2835	21.85	2.44	69.17	-2.54	49.34	58.71	6.87
410	820	1230	1640	2050	2460	2870	21.91	2.11	68.06	-2.81	49.48	58.45	7.07
415	830	1245	1660	2075	2490	2905	22.04	1.81	67.12	-3.07	49.30	60.83	7.16
420	840	1260	1680	2100	2520	2940	22.14	1.47	66.25	-3.48	49.46	58.71	7.34
425	850	1275	1700	2125	2550	2975	22.20	1.22	64.83	-3.85	48.93	62.36	7.44
430	860	1290	1720	2150	2580	3010	22.20	0.98	63.87	-4.06	49.67	58.03	7.88
435	870	1305	1740	2175	2610	3045	22.42	0.46	62.03	-4.47	50.16	56.62	8.21
440	880	1320	1760	2200	2640	3080	22.76	-0.15	60.29	-4.93	50.15	56.72	8.52
445	890	1335	1780	2225	2670	3115	22.96	-0.61	59.06	-5.26	50.43	55.81	8.96
450	900	1350	1800	2250	2700	3150	23.07	-0.94	57.99	-5.64	50.47	55.24	9.43
455	910	1365	1820	2275	2730	3185	23.04	-1.08	57.26	-5.82	49.88	55.44	9.58
460	920	1380	1840	2300	2760	3220	23.00	-1.17	56.68	-6.02	49.43	55.55	9.75
465	930	1395	1860	2325	2790	3255	22.98	-1.26	56.00	-6.37	49.01	55.36	9.75
470	940	1410	1880	2350	2820	3290	22.83	-1.22	55.61	-6.48	49.00	54.62	9.98

* Harmonic Output below power level of X5 Output.

Frequency Multiplier (X5) RMK-5-2251+

Typical Performance Curves

Conversion Loss X5 Output

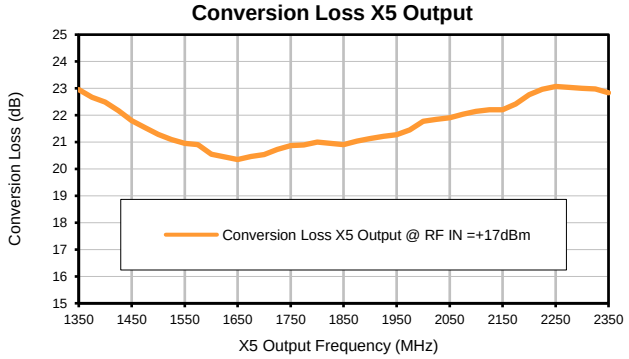

Harmonic X1 Output

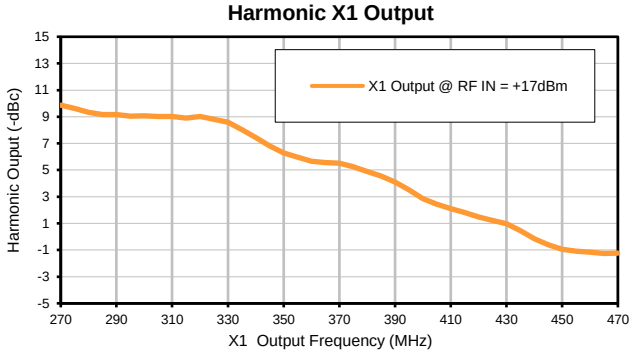

Harmonic X2 Output

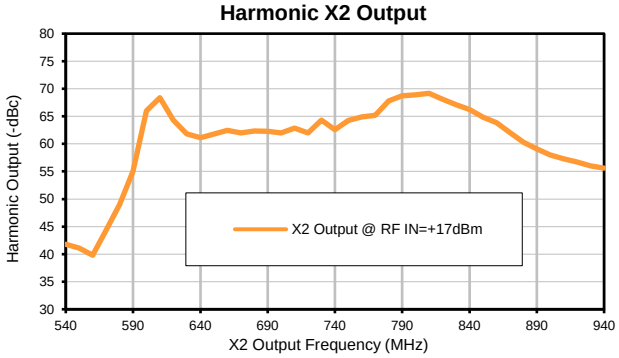

Harmonic X3 Output

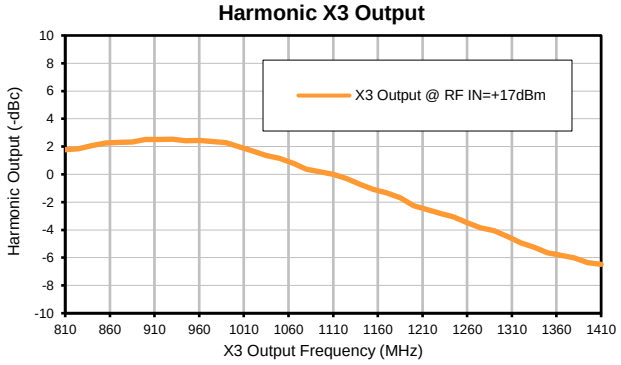

Harmonic X4 Output

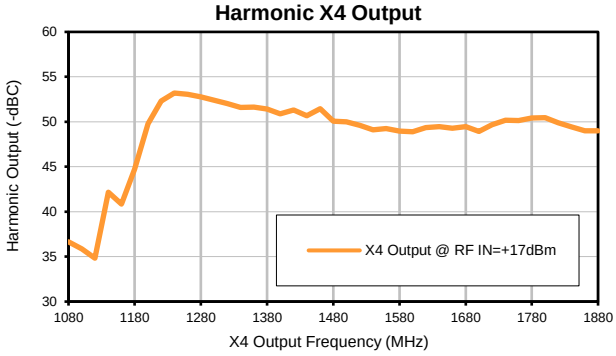

Harmonic X6 Output

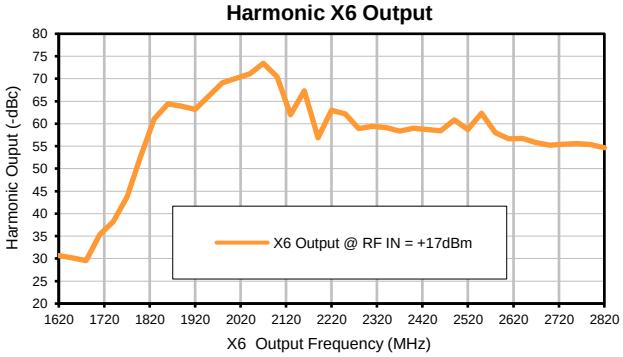

Harmonic X7 Output

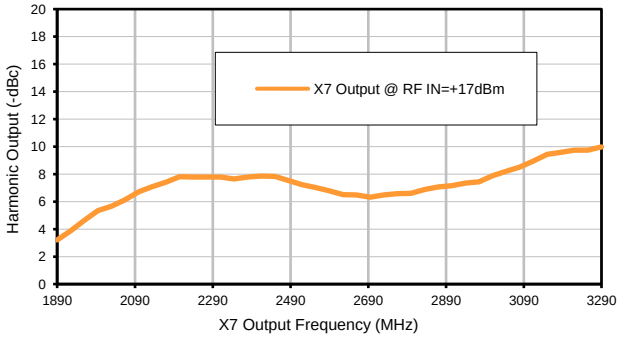

Case Style TT

TT1224

Outline Dimensions

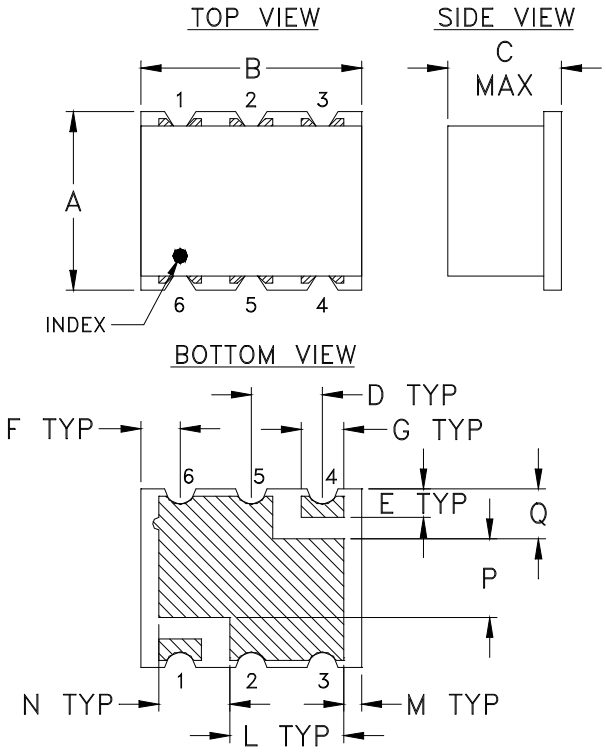

PCB Land Pattern

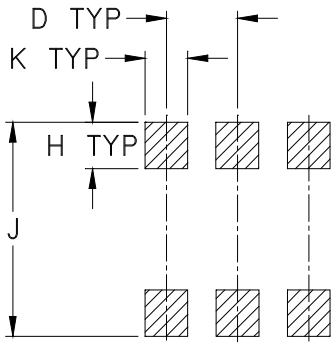

Suggested Layout,
Tolerance to be within ±.002

CASE #	A	B	C	D	E	F	G	H	J	K	L
TT1224	.25 (6.35)	.31 (7.87)	.16 (4.06)	.100 (2.54)	.040 (1.02)	.055 (1.40)	.060 (1.52)	.065 (1.65)	.300 (7.62)	.060 (1.52)	.160 (4.06)

CASE #	M	N	P	Q	WT. GRAM
TT1224	.025 (.64)	.100 (2.54)	.110 (2.79)	.070 (1.78)	.16

Dimensions are in inches (mm). Tolerances: 2Pl. ± .01; 3 Pl. ± .005

Notes:

1. Case material: Plastic.
2. Termination: 2-10 µ inch (.05-.25 microns) Gold over 100-300 µ inch (2.54-7.62 microns) Nickel plate

This document and its contents are the property of Mini-Circuits.

Tape & Reel Packaging TR-F2

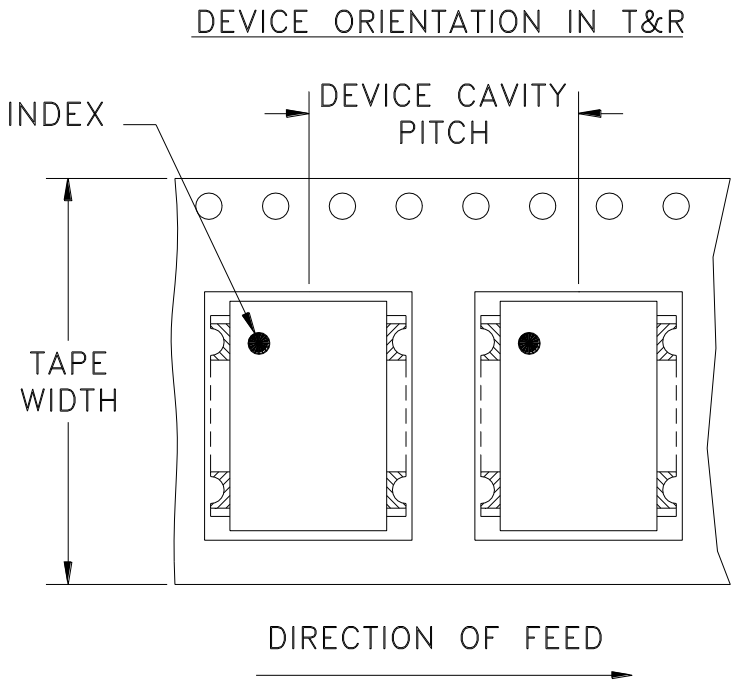

Tape Width, mm	Device Cavity Pitch, mm	Reel Size, inches	Devices per Reel See note
16	12	7	10
			20
			50
			100
			200
		13	500

Note: Please consult individual model data sheet to determine device per reel availability

Mini-Circuits carrier tape materials provide protection from ESD (Electro-Static Discharge) during handling and transportation. Tapes are static dissipative and comply with industry standards EIA-481/EIA-541.

Go to: www.minicircuits.com/pages/pdfs/tape.pdf

Mini-Circuits®
INTERNET http://www.minicircuits.com
P.O. Box 350166, Brooklyn, New York 11235-0003 (718) 934-4500 Fax (718) 332-4661
Distribution Centers NORTH AMERICA 800-654-7949 • 417-335-5935 • Fax 417-335-5945 • EUROPE 44-1252-832600 • Fax 44-1252-837010
Mini-Circuits ISO 9001 & ISO 14001 Certified

This document and its contents are the property of Mini-Circuits.

THIRD ANGLE PROJECTION

REVISIONS					
REV	ECN No.	DESCRIPTION	DATE	DR	AUTH
OR	M108897	NEW RELEASE	01/04/07	AV	DJ

SUGGESTED MOUNTING CONFIGURATION FOR TT1224 CASE STYLE "rv" PIN CONNECTION

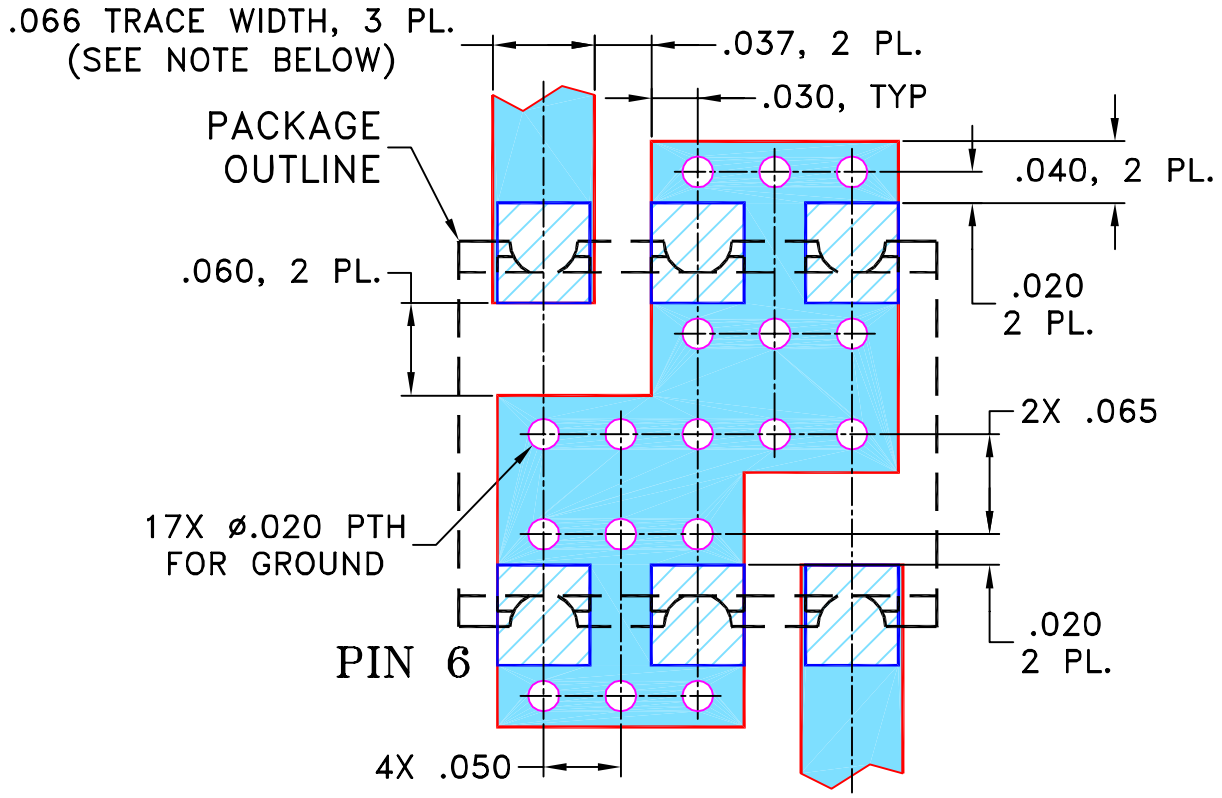

NOTES:
1. TRACE WIDTH IS SHOWN FOR ROGERS RO4350B WITH DIELECTRIC THICKNESS .030" ± .002"; COPPER: 1/2 OZ. EACH SIDE. FOR OTHER MATERIALS TRACE WIDTH MAY NEED TO BE MODIFIED.
2. BOTTOM SIDE OF THE PCB IS CONTINUOUS GROUND PLANE.

DENOTES PCB COPPER LAYOUT WITH SMOBC (SOLDER MASK OVER BARE COPPER)

DENOTES COPPER LAND PATTERN FREE OF SOLDER MASK

UNLESS OTHERWISE SPECIFIED		INITIALS	DATE
DIMENSIONS ARE IN INCHES	DRAWN	AV	12/14/06
TOLERANCES ON:	CHECKED	IL	01/04/07
2 PL DECIMALS ±	APPROVED	DJ	01/04/07
3 PL DECIMALS ± .005			
ANGLES ±			
FRACTIONS ±			

Mini-Circuits®

THIS DOCUMENT AND ITS CONTENTS ARE THE PROPERTY OF MINI-CIRCUITS. EXCEPT FOR USE EXPRESSLY GRANTED, IN WRITING, TO ITS VENDORS, VENDEE AND THE UNITED STATES GOVERNMENT, MINI-CIRCUITS RESERVES ALL PROPRIETARY DESIGN, USE , MANUFACTURING AND REPRODUCTION RIGHTS THERETO. THESE CONTENTS SHALL NOT BE USED, DUPLICATED OR DISCLOSED TO ANY OUTSIDE PARTY, IN WHOLE OR IN PART, WITHOUT WRITTEN PERMISSION OF MINI-CIRCUITS.

ASHEETA1.DWG REV:A DATE:01/12/95

Mini-Circuits® 13 Neptune Avenue Brooklyn NY 11235

PL, rv, TT1224, RMK-3-662+, TB-393

SIZE	CODE IDENT	DRAWING NO:	REV:
A	15542	98-PL-258	OR

FILE:	SCALE:	SHEET:
98PL258	8:1	1 OF 1

Evaluation Board and Circuit

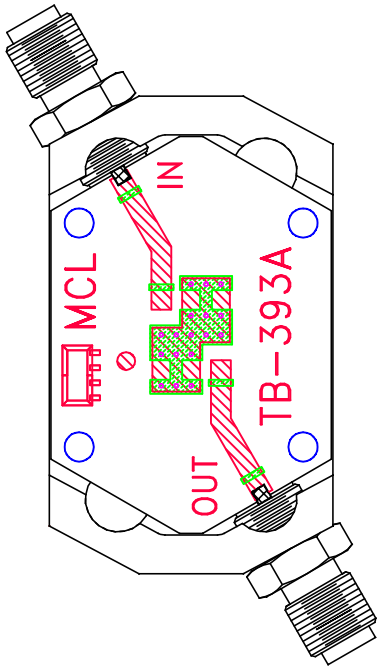

TB-393

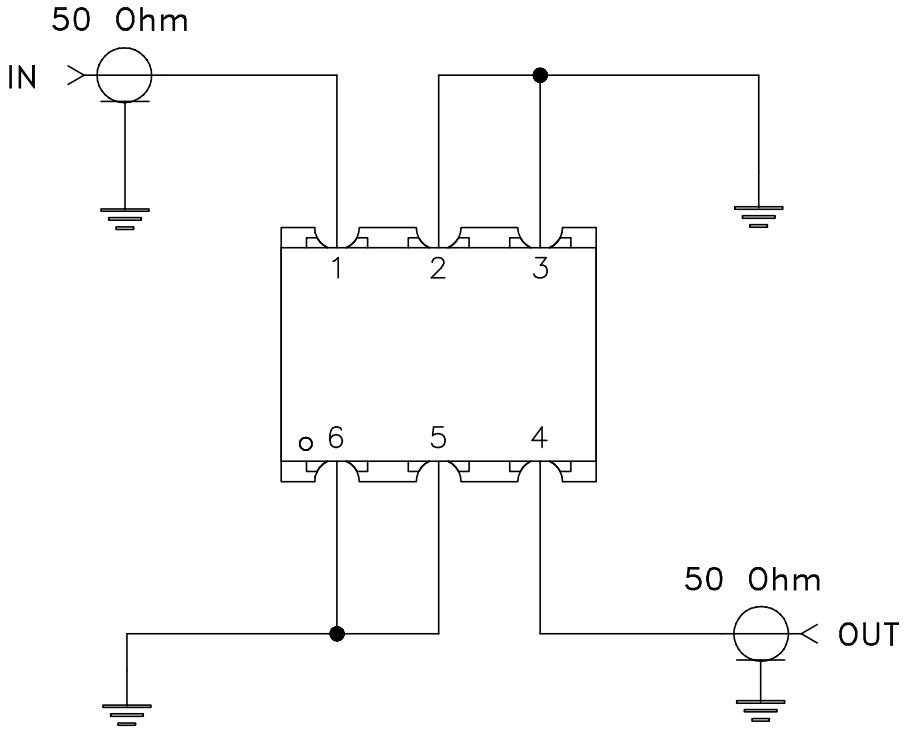

Schematic Diagram

Notes:

1. SMA Female connectors.
2. PCB Material: Rogers RO4350 or equivalent, Dielectric Constant=3.5, Thickness=.030 inch.

Mini-Circuits®

THIS DOCUMENT AND ITS CONTENTS ARE THE PROPERTY OF MINI-CIRCUITS.

Mini-Circuits

Environmental Specifications ENV02T1

All Mini-Circuits products are manufactured under exacting quality assurance and control standards, and are capable of meeting published specifications after being subjected to any or all of the following physical and environmental test.

Specification	Test/Inspection Condition	Reference/Spec
Operating Temperature	-40° to 85°C Ambient Environment	Individual Model Data Sheet
Storage Temperature	-55° to 100° C Ambient Environment	Individual Model Data Sheet
Humidity	90 to 95% RH, 240 hours, 50°C	MIL-STD-202, Method 103, Condition A, Except 50°C and end-point electrical test done within 12 hours
Thermal Shock	-55° to 100°C, 100 cycles	MIL-STD-202, Method 107, Condition A-3, except +100°C
Solder Reflow Heat	Sn-Pb Eutetic Process: 225°C peak Pb-Free Process 245° - 250°C peak	J-STD-020, Table 4-1, 4-2 and 5-2, Figure 5-1
Solderability	10X Magnification	J-STD-002, 95% Coverage
Vibration (High Frequency)	20g peak, 10-2000 Hz, 12 times in each of three perpendicular directions (total 36)	MIL-STD-202, Method 204, Condition D
Mechanical Shock	50g, 11 ms, 1/2-sine, 18 shocks: 3 each direction, each of 3 axes	MIL-STD-202, Method 213, Condition A
Marking Resistance to Solvents	Isopropyl alcohol + mineral spirits at 25°C; terpene defluxer at 25°C; distilled water + proylene glycol monomethyl ether + monoethanolamine at 63°C to 70°C	MIL-STD-202, Method 215

This document and its contents are the property of Mini-Circuits.

Looking for pricing, stock, or lifecycle information?

Click below to explore more details on WIN SOURCE:

- View RMK-5-2251+ on WIN SOURCE
- Mini-Circuits Information

Optimize Your Supply Chain with WIN SOURCE Solutions

- Global Sourcing Solution
- Obsolete Management
- Cost Control Management
- Shortage Management
- Alternative Solution
- Excess Inventory Management