THE DATASHEET OF

MPSA44

ELECTRONICS, INC.
44 FARRAND STREET
BLOOMFIELD, NJ 07003
(973) 748–5089
http://www.nteinc.com

MPSA44
Silicon NPN Transistor
High Voltage

Absolute Maximum Ratings:

Collector–Emitter Voltage, V_{CEO} 400V
Collector–Base Voltage, V_{CBO} 500V
Emitter–Base Voltage, V_{EBO} 6V
Continuous Collector Current, I_C 300mA
Total Device Dissipation (T_A = 25°C), P_D 625mW
Derate Above 25°C . . . . . 5mW/°C
Total Device Dissipation (T_C = 25°C), P_D 1.5W
Derate Above 25°C . . . . . 12mW/°C
Operating Junction Temperature Range, T_J . . . . . –55° to +150°C
Storage Temperature Range, T_{stg} . . . . . –55° to +150°C
Thermal Resistance, Junction–to–Case, R_{thJC} . . . . . 83.3°C/W
Thermal Resistance, Junction–to–Ambient, R_{thJA} . . . . . 200°C/W

Electrical Characteristics: (T_A = +25°C unless otherwise specified)

Parameter	Symbol	Test Conditions	Min	Typ	Max	Unit
OFF Characteristics						
Collector–Emitter Breakdown Voltage	$V_{(BR)CEO}$	I_C = 1.0mA, I_B = 0, Note 1	400	–	–	V
	$V_{(BR)CES}$	I_C = 100≤A, V_{BE} = 0	500	–	–	V
Collector–Base Breakdown Voltage	$V_{(BR)CBO}$	I_C = –100≤A, I_E = 0	500	–	–	V
Emitter–Base Breakdown Voltage	$V_{(BR)EBO}$	I_E = –10≤A, I_C = 0	6.0	–	–	V
Collector Cutoff Current	I_{CBO}	V_{CB} = 400V, I_E = 0	–	–	0.1	≤A
	I_{CES}	V_{CE} = 400V, V_{BE} = 0	–	–	500	nA
ON Characteristics (Note 1)						
DC Current Gain	h_{FE}	V_{CE} = 10V, I_C = 1mA	40	–	–	
		V_{CE} = 10V, I_C = 10mA	50	–	200	
		V_{CE} = 10V, I_C = 50mA	45	–	–	
		V_{CE} = 10V, I_C = 100mA	40	–	–	
Collector–Emitter Saturation Voltage	$V_{CE(sat)}$	I_C = 1mA, I_B = 0.1mA	–	–	0.4	V
		I_C = 10mA, I_B = 1.0mA	–	–	0.5	V
		I_C = 50mA, I_B = 5.0mA	–	–	0.75	V
Base–Emitter Saturation Voltage	$V_{BE(sat)}$	I_C = 10mA, I_B = 1mA	–	–	0.75	V

Note 1. Pulse Test: Pulse Width ≤ 300≤s, Duty Cycle ≤ 2%.

Electrical Characteristics (Cont'd): (T_A = +25°C unless otherwise specified)

Parameter	Symbol	Test Conditions	Min	Typ	Max	Unit
Small Signal Characteristics						
Output Capacitance	C_{obo}	V_{CB} = 20V, I_E = 0, f = 1MHz	–	–	7	pF
Input Capacitance	C_{ibo}	V_{EB} = 0.5V, I_C = 0, f = 1MHz	–	–	130	pF
Small−Signal Current Gain	h_{fe}	I_C = 10mA, V_{CE} = 10V, f = 20MHz	1.0	–	–	–

Note 1. Pulse Test: Pulse Width ≤ 300≤s, Duty Cycle ≤ 2%.

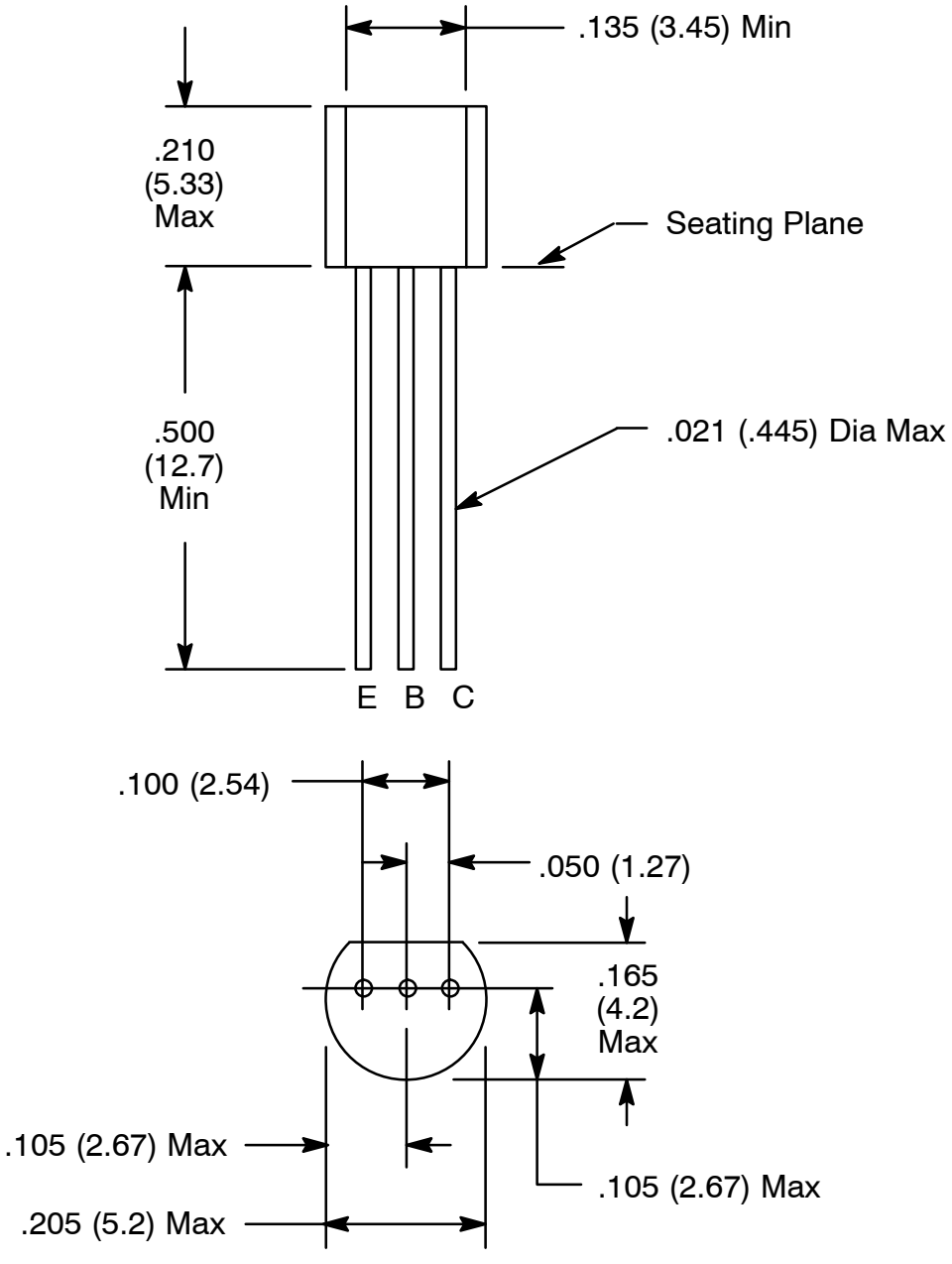

Looking for pricing, stock, or lifecycle information?

Click below to explore more details on WIN SOURCE:

- View MPSA44 on WIN SOURCE
- NTE Information

Optimize Your Supply Chain with WIN SOURCE Solutions

- Global Sourcing Solution
- Obsolete Management
- Cost Control Management
- Shortage Management
- Alternative Solution
- Excess Inventory Management