Freescale Semiconductor
Technical Data

Document Number: MPC8343EAEC
Rev. 11, 09/2011

MPC8343EA PowerQUICC II Pro Integrated Host Processor Hardware Specifications

The MPC8343EA PowerQUICC II Pro is a next generation PowerQUICC II integrated host processor. The MPC8343EA contains a processor core built on Power Architecture® technology with system logic for networking, storage, and general-purpose embedded applications. For functional characteristics of the processor, refer to the *MPC8349EA PowerQUICC II Pro Integrated Host Processor Family Reference Manual*.

To locate published errata or updates for this document, refer to the MPC8343EA product summary page on our website, as listed on the back cover of this document, or contact your local Freescale sales office.

Contents

1. Overview 2
2. Electrical Characteristics 6
3. Power Characteristics 10
4. Clock Input Timing 11
5. RESET Initialization 13
6. DDR and DDR2 SDRAM 15
7. DUART 21
8. Ethernet: Three-Speed Ethernet, MII Management . 22
9. USB 30
10. Local Bus 31
11. JTAG 37
12. I^2C 41
13. PCI 43
14. Timers 45
15. GPIO 46
16. IPIC 47
17. SPI 47
18. Package and Pin Listings 49
19. Clocking 60
20. Thermal 68
21. System Design Information 73
22. Ordering Information 76
23. Document Revision History 78

© 2006–2011 Freescale Semiconductor, Inc. All rights reserved.

NOTE

The information in this document is accurate for revision 3.x silicon and later (in other words, for orderable part numbers ending in A or B). For information on revision 1.1 silicon and earlier versions, see the *MPC8343E PowerQUICC II Pro Integrated Host Processor Hardware Specifications.*

See Section 22.1, "Part Numbers Fully Addressed by This Document," for silicon revision level determination.

1 Overview

This section provides a high-level overview of the device features. Figure 1 shows the major functional units within the MPC8343EA.

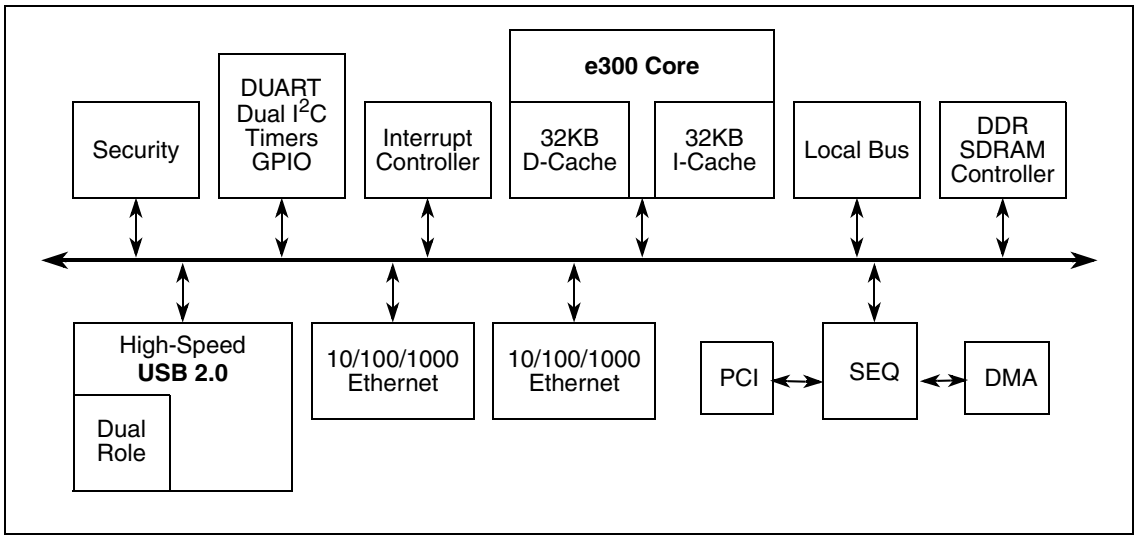

Figure 1. MPC8343EA Block Diagram

Major features of the device are as follows:

- Embedded PowerPC e300 processor core; operates at up to 400 MHz
  - High-performance, superscalar processor core
  - Floating-point, integer, load/store, system register, and branch processing units
  - 32-Kbyte instruction cache, 32-Kbyte data cache
  - Lockable portion of L1 cache
  - Dynamic power management
  - Software-compatible with the other Freescale processor families that implement Power Architecture technology
- Double data rate, DDR1/DDR2 SDRAM memory controller
  - Programmable timing supporting DDR1 and DDR2 SDRAM
  - 32- bit data interface, up to 266 MHz data rate

  - Up to four physical banks (chip selects), each bank up to 1 Gbyte independently addressable
  - DRAM chip configurations from 64 Mbits to 1 Gbit with ×8/×16 data ports
  - Full error checking and correction (ECC) support
  - Support for up to 16 simultaneous open pages (up to 32 pages for DDR2)
  - Contiguous or discontiguous memory mapping
  - Read-modify-write support
  - Sleep-mode support for SDRAM self refresh
  - Auto refresh
  - On-the-fly power management using CKE
  - Registered DIMM support
  - 2.5-V SSTL2 compatible I/O for DDR1, 1.8-V SSTL2 compatible I/O for DDR2
- Dual three-speed (10/100/1000) Ethernet controllers (TSECs)
  - Dual controllers designed to comply with IEEE 802.3™, 802.3u™, 820.3x™, 802.3z™, 802.3ac™ standards
  - Ethernet physical interfaces:
    - 1000 Mbps IEEE Std. 802.3 RGMII, IEEE Std. 802.3z RTBI, full-duplex
    - 10/100 Mbps IEEE Std. 802.3 MII full- and half-duplex
  - Buffer descriptors are backward-compatible with MPC8260 and MPC860T 10/100 programming models
  - 9.6-Kbyte jumbo frame support
  - RMON statistics support
  - Internal 2-Kbyte transmit and 2-Kbyte receive FIFOs per TSEC module
  - MII management interface for control and status
  - Programmable CRC generation and checking
- PCI interface
  - Designed to comply with *PCI Specification Revision 2.3*
  - Data bus width:
    - 32-bit data PCI interface operating at up to 66 MHz
  - PCI 3.3-V compatible
  - PCI host bridge capabilities
  - PCI agent mode on PCI interface
  - PCI-to-memory and memory-to-PCI streaming
  - Memory prefetching of PCI read accesses and support for delayed read transactions
  - Posting of processor-to-PCI and PCI-to-memory writes
  - On-chip arbitration supporting five masters on PCI
  - Accesses to all PCI address spaces
  - Parity supported
  - Selectable hardware-enforced coherency

- Address translation units for address mapping between host and peripheral
- Dual address cycle for target
- Internal configuration registers accessible from PCI

- Security engine is optimized to handle all the algorithms associated with IPSec, SSL/TLS, SRTP, IEEE Std. 802.11i®, iSCSI, and IKE processing. The security engine contains four crypto-channels, a controller, and a set of crypto execution units (EUs):
  - Public key execution unit (PKEU) :
    - RSA and Diffie-Hellman algorithms
    - Programmable field size up to 2048 bits
    - Elliptic curve cryptography
    - F2m and F(p) modes
    - Programmable field size up to 511 bits
  - Data encryption standard (DES) execution unit (DEU)
    - DES and 3DES algorithms
    - Two key (K1, K2) or three key (K1, K2, K3) for 3DES
    - ECB and CBC modes for both DES and 3DES
  - Advanced encryption standard unit (AESU)
    - Implements the Rijndael symmetric-key cipher
    - Key lengths of 128, 192, and 256 bits
    - ECB, CBC, CCM, and counter (CTR) modes
  - XOR parity generation accelerator for RAID applications
  - ARC four execution unit (AFEU)
    - Stream cipher compatible with the RC4 algorithm
    - 40- to 128-bit programmable key
  - Message digest execution unit (MDEU)
    - SHA with 160-, 224-, or 256-bit message digest
    - MD5 with 128-bit message digest
    - HMAC with either algorithm
  - Random number generator (RNG)
  - Four crypto-channels, each supporting multi-command descriptor chains
    - Static and/or dynamic assignment of crypto-execution units through an integrated controller
    - Buffer size of 256 bytes for each execution unit, with flow control for large data sizes
- Universal serial bus (USB) dual role controller
  - USB on-the-go mode with both device and host functionality
  - Complies with USB specification Rev. 2.0
  - Can operate as a stand-alone USB device
    - One upstream facing port
    - Six programmable USB endpoints

  - Can operate as a stand-alone USB host controller
    - USB root hub with one downstream-facing port
    - Enhanced host controller interface (EHCI) compatible
    - High-speed (480 Mbps), full-speed (12 Mbps), and low-speed (1.5 Mbps) operations
  - External PHY with UTMI, serial and UTMI+ low-pin interface (ULPI)
- Local bus controller (LBC)
  - Multiplexed 32-bit address and data operating at up to 133 MHz
  - Eight chip selects for eight external slaves
  - Up to eight-beat burst transfers
  - 32-, 16-, and 8-bit port sizes controlled by an on-chip memory controller
  - Three protocol engines on a per chip select basis:
    - General-purpose chip select machine (GPCM)
    - Three user-programmable machines (UPMs)
    - Dedicated single data rate SDRAM controller
  - Parity support
  - Default boot ROM chip select with configurable bus width (8-, 16-, or 32-bit)
- Programmable interrupt controller (PIC)
  - Functional and programming compatibility with the MPC8260 interrupt controller
  - Support for 8 external and 35 internal discrete interrupt sources
  - Support for 1 external (optional) and 7 internal machine checkstop interrupt sources
  - Programmable highest priority request
  - Four groups of interrupts with programmable priority
  - External and internal interrupts directed to host processor
  - Redirects interrupts to external $\overline{\text{INTA}}$ pin in core disable mode.
  - Unique vector number for each interrupt source
- Dual industry-standard I^2C interfaces
  - Two-wire interface
  - Multiple master support
  - Master or slave I^2C mode support
  - On-chip digital filtering rejects spikes on the bus
  - System initialization data optionally loaded from I^2C-1 EPROM by boot sequencer embedded hardware
- DMA controller
  - Four independent virtual channels
  - Concurrent execution across multiple channels with programmable bandwidth control
  - Handshaking (external control) signals for all channels: $\overline{\text{DMA_DREQ}}$[0:3], $\overline{\text{DMA_DACK}}$[0:3], $\overline{\text{DMA_DDONE}}$[0:3]
  - All channels accessible to local core and remote PCI masters

  - Misaligned transfer capability
  - Data chaining and direct mode
  - Interrupt on completed segment and chain
- DUART
  - Two 4-wire interfaces (RxD, TxD, RTS, CTS)
  - Programming model compatible with the original 16450 UART and the PC16550D
- Serial peripheral interface (SPI) for master or slave
- General-purpose parallel I/O (GPIO)
  - 39 parallel I/O pins multiplexed on various chip interfaces
- System timers
  - Periodic interrupt timer
  - Real-time clock
  - Software watchdog timer
  - Eight general-purpose timers
- Designed to comply with IEEE Std. 1149.1™, JTAG boundary scan
- Integrated PCI bus and SDRAM clock generation

2 Electrical Characteristics

This section provides the AC and DC electrical specifications and thermal characteristics for the MPC8343EA. The device is currently targeted to these specifications. Some of these specifications are independent of the I/O cell, but are included for a more complete reference. These are not purely I/O buffer design specifications.

2.1 Overall DC Electrical Characteristics

This section covers the ratings, conditions, and other characteristics.

2.1.1 Absolute Maximum Ratings

Table 1 provides the absolute maximum ratings.

Table 1. Absolute Maximum Ratings[1]

Parameter	Symbol	Max Value	Unit	Notes
Core supply voltage	V_{DD}	–0.3 to 1.32	V	—
PLL supply voltage	AV_{DD}	–0.3 to 1.32	V	—
DDR and DDR2 DRAM I/O voltage	GV_{DD}	–0.3 to 2.75 –0.3 to 1.98	V	—
Three-speed Ethernet I/O, MII management voltage	LV_{DD}	–0.3 to 3.63	V	—
PCI, local bus, DUART, system control and power management, I^2C, and JTAG I/O voltage	OV_{DD}	–0.3 to 3.63	V	—

Table 1. Absolute Maximum Ratings[1] (continued)

Parameter		Symbol	Max Value	Unit	Notes
Input voltage	DDR DRAM signals	MV_{IN}	–0.3 to (GV_{DD} + 0.3)	V	2, 5
	DDR DRAM reference	MV_{REF}	–0.3 to (GV_{DD} + 0.3)	V	2, 5
	Three-speed Ethernet signals	LV_{IN}	–0.3 to (LV_{DD} + 0.3)	V	4, 5
	Local bus, DUART, CLKIN, system control and power management, I^2C, and JTAG signals	OV_{IN}	–0.3 to (OV_{DD} + 0.3)	V	3, 5
	PCI	OV_{IN}	–0.3 to (OV_{DD} + 0.3)	V	6
Storage temperature range		T_{STG}	–55 to 150	°C	—

Notes:
1. Functional and tested operating conditions are given in Table 2. Absolute maximum ratings are stress ratings only, and functional operation at the maximums is not guaranteed. Stresses beyond those listed may affect device reliability or cause permanent damage to the device.
2. **Caution:** MV_{IN} must not exceed GV_{DD} by more than 0.3 V. This limit can be exceeded for a maximum of 20 ms during power-on reset and power-down sequences.
3. **Caution:** OV_{IN} must not exceed OV_{DD} by more than 0.3 V. This limit can be exceeded for a maximum of 20 ms during power-on reset and power-down sequences.
4. **Caution:** LV_{IN} must not exceed LV_{DD} by more than 0.3 V. This limit can be exceeded for a maximum of 20 ms during power-on reset and power-down sequences.
5. (M,L,O)V_{IN} and MV_{REF} may overshoot/undershoot to a voltage and for a maximum duration as shown in Figure 2.
6. OVIN on the PCI interface can overshoot/undershoot according to the PCI Electrical Specification for 3.3-V operation, as shown in Figure 3.

2.1.2 Power Supply Voltage Specification

Table 2 provides the recommended operating conditions for the MPC8343EA. Note that the values in Table 2 are the recommended and tested operating conditions. Proper device operation outside these conditions is not guaranteed.

Table 2. Recommended Operating Conditions

Parameter	Symbol	Recommended Value	Unit	Notes
Core supply voltage	V_{DD}	1.2 V ± 60 mV	V	1
PLL supply voltage	AV_{DD}	1.2 V ± 60 mV	V	1
DDR and DDR2 DRAM I/O voltage	GV_{DD}	2.5 V ± 125 mV 1.8 V ± 90 mV	V	—
Three-speed Ethernet I/O supply voltage	LV_{DD1}	3.3 V ± 330 mV 2.5 V ± 125 mV	V	—
Three-speed Ethernet I/O supply voltage	LV_{DD2}	3.3 V ± 330 mV 2.5 V ± 125 mV	V	—

Table 2. Recommended Operating Conditions (continued)

Parameter	Symbol	Recommended Value	Unit	Notes
PCI, local bus, DUART, system control and power management, I^2C, and JTAG I/O voltage	OV_{DD}	3.3 V ± 330 mV	V	—

Note:
1 GV_{DD}, LV_{DD}, OV_{DD}, AV_{DD}, and V_{DD} must track each other and must vary in the same direction—either in the positive or negative direction.

Figure 2 shows the undershoot and overshoot voltages at the interfaces of the MPC8343EA.

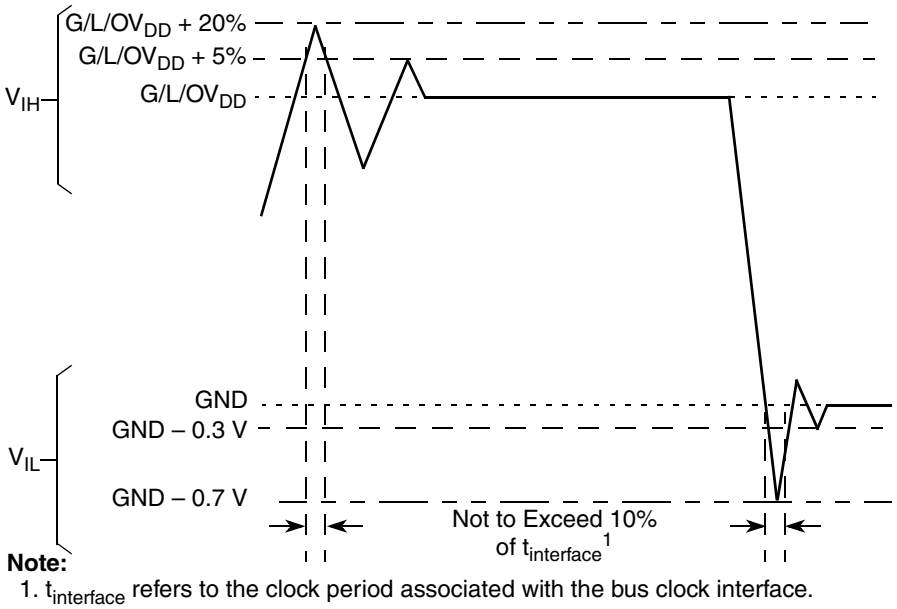

Figure 2. Overshoot/Undershoot Voltage for $GV_{DD}/OV_{DD}/LV_{DD}$

Figure 3 shows the undershoot and overshoot voltage of the PCI interface of the MPC8343EA for the 3.3-V signals, respectively.

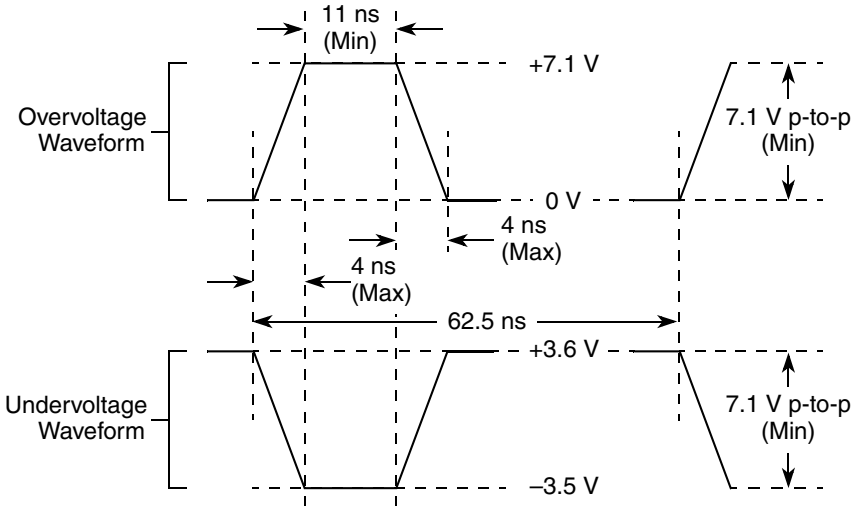

Figure 3. Maximum AC Waveforms on PCI Interface for 3.3-V Signaling

2.1.3 Output Driver Characteristics

Table 3 provides information on the characteristics of the output driver strengths. The values are preliminary estimates.

Table 3. Output Drive Capability

Driver Type	Output Impedance (Ω)	Supply Voltage
Local bus interface utilities signals	40	OV_{DD} = 3.3 V
PCI signals (not including PCI output clocks)	25	
PCI output clocks (including PCI_SYNC_OUT)	40	
DDR signal	18	GV_{DD} = 2.5 V
DDR2 signal	18 36 (half-strength mode)	GV_{DD} = 1.8 V
TSEC/10/100 signals	40	LV_{DD} = 2.5/3.3 V
DUART, system control, I^2C, JTAG, USB	40	OV_{DD} = 3.3 V
GPIO signals	40	OV_{DD} = 3.3 V, LV_{DD} = 2.5/3.3 V

2.2 Power Sequencing

This section details the power sequencing considerations for the MPC8343EA.

2.2.1 Power-Up Sequencing

MPC8343EAdoes not require the core supply voltage (V_{DD} and AV_{DD}) and I/O supply voltages (GV_{DD}, LV_{DD}, and OV_{DD}) to be applied in any particular order. During the power ramp up, before the power

supplies are stable and if the I/O voltages are supplied before the core voltage, there may be a period of time that all input and output pins will actively be driven and cause contention and excessive current from 3A to 5A. In order to avoid actively driving the I/O pins and to eliminate excessive current draw, apply the core voltage (V_{DD}) before the I/O voltage (GV_{DD}, LV_{DD}, and OV_{DD}) and assert $\overline{\text{PORESET}}$ before the power supplies fully ramp up. In the case where the core voltage is applied first, the core voltage supply must rise to 90% of its nominal value before the I/O supplies reach 0.7 V, see Figure 4.

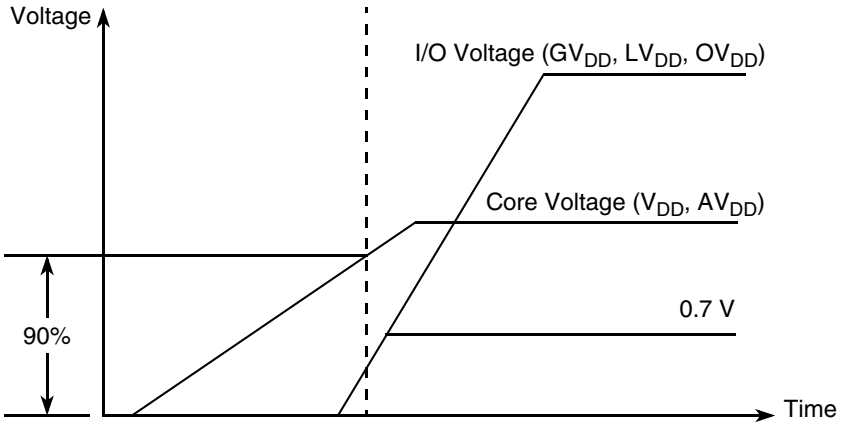

Figure 4. Power Sequencing Example

I/O voltage supplies (GV_{DD}, LV_{DD}, and OV_{DD}) do not have any ordering requirements with respect to one another.

3 Power Characteristics

The estimated typical power dissipation for the MPC8343EA device is shown in Table 4.

Table 4. MPC8343EA Power Dissipation[1]

	Core Frequency (MHz)	CSB Frequency (MHz)	Typical at T_J = 65	Typical[2,3]	Maximum[4]	Unit
PBGA	266	266	1.3	1.6	1.8	W
		133	1.1	1.4	1.6	W
	400	266	1.5	1.9	2.1	W
		133	1.4	1.7	1.9	W
	400	200	1.5	1.8	2.0	W
		100	1.3	1.7	1.9	W

1 The values do not include I/O supply power (OV_{DD}, LV_{DD}, GV_{DD}) or AV_{DD}. For I/O power values, see Table 5.

2 Typical power is based on a voltage of V_{DD} = 1.2 V, a junction temperature of T_J = 105°C, and a Dhrystone benchmark application.

3 Thermal solutions may need to design to a value higher than typical power based on the end application, T_A target, and I/O power.

4 Maximum power is based on a voltage of V_{DD} = 1.2 V, worst case process, a junction temperature of T_J = 105°C, and an artificial smoke test.

Table 5 shows the estimated typical I/O power dissipation for MPC8343EA.

Table 5. MPC8343EA Typical I/O Power Dissipation

Interface	Parameter	DDR2 GV_{DD} (1.8 V)	DDR1 GV_{DD} (2.5 V)	OV_{DD} (3.3 V)	LV_{DD} (3.3 V)	LV_{DD} (2.5 V)	Unit	Comments
DDR I/O 65% utilization 2.5 V Rs = 20 Ω Rt = 50 Ω 2 pair of clocks	200 MHz, 32 bits	0.31	0.42	—	—	—	W	—
	266 MHz, 32 bits	0.35	0.5	—	—	—	W	—
PCI I/O load = 30 pF	33 MHz, 32 bits	—	—	0.04	—	—	W	—
	66 MHz, 32 bits	—	—	0.07	—	—	W	—
Local bus I/O load = 25 pF	167 MHz, 32 bits	—	—	0.34	—	—	W	—
	133 MHz, 32 bits	—	—	0.27	—	—	W	—
	83 MHz, 32 bits	—	—	0.17	—	—	W	—
	66 MHz, 32 bits	—	—	0.14	—	—	W	—
	50 MHz, 32 bits	—	—	0.11	—	—	W	—
TSEC I/O load = 25 pF	MII	—	—		0.01	—	W	Multiply by number of interfaces used.
	GMII or TBI	—	—		0.06	—	W	
	RGMII or RTBI	—	—		—	0.04	W	
USB	12 MHz	—	—	0.01	—	—	W	—
	480 MHz	—	—	0.2	—	—	W	—
Other I/O		—	—	0.01	—	—	W	—

4 Clock Input Timing

This section provides the clock input DC and AC electrical characteristics for the device.

4.1 DC Electrical Characteristics

Table 6 provides the clock input (CLKIN/PCI_SYNC_IN) DC timing specifications for the MPC8343EA.

Table 6. CLKIN DC Timing Specifications

Parameter	Condition	Symbol	Min	Max	Unit
Input high voltage	—	V_{IH}	2.7	OV_{DD} + 0.3	V
Input low voltage	—	V_{IL}	–0.3	0.4	V
CLKIN input current	$0 V \le V_{IN} \le OV_{DD}$	I_{IN}	—	±10	μA

Table 6. CLKIN DC Timing Specifications (continued)

Parameter	Condition	Symbol	Min	Max	Unit
PCI_SYNC_IN input current	$0 V \le V_{IN} \le 0.5 V$ or $OV_{DD} - 0.5 V \le V_{IN} \le OV_{DD}$	I_{IN}	—	±10	μA
PCI_SYNC_IN input current	$0.5 V \le V_{IN} \le OV_{DD} - 0.5 V$	I_{IN}	—	±50	μA

4.2 AC Electrical Characteristics

The primary clock source for the MPC8343EA can be one of two inputs, CLKIN or PCI_CLK, depending on whether the device is configured in PCI host or PCI agent mode. Table 7 provides the clock input (CLKIN/PCI_CLK) AC timing specifications for the device.

Table 7. CLKIN AC Timing Specifications

Parameter/Condition	Symbol	Min	Typical	Max	Unit	Notes
CLKIN/PCI_CLK frequency	f_{CLKIN}	—	—	66	MHz	1, 6
CLKIN/PCI_CLK cycle time	t_{CLKIN}	15	—	—	ns	—
CLKIN/PCI_CLK rise and fall time	t_{KH}, t_{KL}	0.6	1.0	2.3	ns	2
CLKIN/PCI_CLK duty cycle	t_{KHK}/t_{CLKIN}	40	—	60	%	3
CLKIN/PCI_CLK jitter	—	—	—	±150	ps	4, 5

Notes:
1. **Caution:** The system, core, USB, security, and TSEC must not exceed their respective maximum or minimum operating frequencies.
2. Rise and fall times for CLKIN/PCI_CLK are measured at 0.4 and 2.7 V.
3. Timing is guaranteed by design and characterization.
4. This represents the total input jitter—short term and long term—and is guaranteed by design.
5. The CLKIN/PCI_CLK driver's closed loop jitter bandwidth should be < 500 kHz at –20 dB. The bandwidth must be set low to allow cascade-connected PLL-based devices to track CLKIN drivers with the specified jitter.
6. Spread spectrum clocking is allowed with 1% input frequency down-spread at maximum 50 KHz modulation rate regardless of input frequency.

4.3 TSEC Gigabit Reference Clock Timing

Table 8 provides the TSEC gigabit reference clocks (EC_GTX_CLK125) AC timing specifications.

Table 8. EC_GTX_CLK125 AC Timing Specifications

At recommended operating conditions with LV_{DD} = 2.5 ± 0.125 mV/ 3.3 V ± 165 mV

Parameter	Symbol	Min	Typical	Max	Unit	Notes
EC_GTX_CLK125 frequency	t_{G125}	—	125	—	MHz	—
EC_GTX_CLK125 cycle time	t_{G125}	—	8	—	ns	—
EC_GTX_CLK125 rise and fall time LV_{DD} = 2.5 V LV_{DD} = 3.3 V	t_{G125R}/t_{G125F}	—	—	 0.75 1.0	ns	1

Table 8. EC_GTX_CLK125 AC Timing Specifications

At recommended operating conditions with LV_{DD} = 2.5 ± 0.125 mV/ 3.3 V ± 165 mV (continued)

Parameter	Symbol	Min	Typical	Max	Unit	Notes
EC_GTX_CLK125 duty cycle GMII, TBI 1000Base-T for RGMII, RTBI	t_{G125H}/t_{G125}	 45 47	—	 55 53	%	2
EC_GTX_CLK125 jitter	—	—	—	±150	ps	2

Notes:

1. Rise and fall times for EC_GTX_CLK125 are measured from 0.5 and 2.0 V for LV_{DD} = 2.5 V and from 0.6 and 2.7 V for LV_{DD} = 3.3 V.
2. EC_GTX_CLK125 is used to generate the GTX clock for the eTSEC transmitter with 2% degradation. The EC_GTX_CLK125 duty cycle can be loosened from 47%/53% as long as the PHY device can tolerate the duty cycle generated by the eTSEC GTX_CLK. See Section 8.2.2, "RGMII and RTBI AC Timing Specifications for the duty cycle for 10Base-T and 100Base-T reference clock.

5 RESET Initialization

This section describes the DC and AC electrical specifications for the reset initialization timing and electrical requirements of the MPC8343EA.

5.1 RESET DC Electrical Characteristics

Table 9 provides the DC electrical characteristics for the RESET pins of the MPC8343EA.

Table 9. RESET Pins DC Electrical Characteristics[1]

Parameter	Symbol	Condition	Min	Max	Unit
Input high voltage	V_{IH}	—	2.0	OV_{DD} + 0.3	V
Input low voltage	V_{IL}	—	–0.3	0.8	V
Input current	I_{IN}	—	—	±5	μA
Output high voltage[2]	V_{OH}	I_{OH} = –8.0 mA	2.4	—	V
Output low voltage	V_{OL}	I_{OL} = 8.0 mA	—	0.5	V
Output low voltage	V_{OL}	I_{OL} = 3.2 mA	—	0.4	V

Notes:

1. This table applies for pins $\overline{\text{PORESET}}$, $\overline{\text{HRESET}}$, $\overline{\text{SRESET}}$, and $\overline{\text{QUIESCE}}$.
2. $\overline{\text{HRESET}}$ and $\overline{\text{SRESET}}$ are open drain pins, thus V_{OH} is not relevant for those pins.

5.2 RESET AC Electrical Characteristics

Table 10 provides the reset initialization AC timing specifications of the MPC8343EA.

Table 10. RESET Initialization Timing Specifications

Parameter	Min	Max	Unit	Notes
Required assertion time of $\overline{\text{HRESET}}$ or $\overline{\text{SRESET}}$ (input) to activate reset flow	32	—	$t_{PCI_SYNC_IN}$	1
Required assertion time of $\overline{\text{PORESET}}$ with stable clock applied to CLKIN when the MPC8343EA is in PCI host mode	32	—	t_{CLKIN}	2
Required assertion time of $\overline{\text{PORESET}}$ with stable clock applied to PCI_SYNC_IN when the MPC8343EA is in PCI agent mode	32	—	$t_{PCI_SYNC_IN}$	1
$\overline{\text{HRESET}}$/$\overline{\text{SRESET}}$ assertion (output)	512	—	$t_{PCI_SYNC_IN}$	1
$\overline{\text{HRESET}}$ negation to $\overline{\text{SRESET}}$ negation (output)	16	—	$t_{PCI_SYNC_IN}$	1
Input setup time for POR configuration signals (CFG_RESET_SOURCE[0:2] and CFG_CLKIN_DIV) with respect to negation of $\overline{\text{PORESET}}$ when the MPC8343EA is in PCI host mode	4	—	t_{CLKIN}	2
Input setup time for POR configuration signals (CFG_RESET_SOURCE[0:2] and CFG_CLKIN_DIV) with respect to negation of $\overline{\text{PORESET}}$ when the MPC8343EA is in PCI agent mode	4	—	$t_{PCI_SYNC_IN}$	1
Input hold time for POR configuration signals with respect to negation of $\overline{\text{HRESET}}$	0	—	ns	—
Time for the MPC8343EA to turn off POR configuration signals with respect to the assertion of $\overline{\text{HRESET}}$	—	4	ns	3
Time for the MPC8343EA to turn on POR configuration signals with respect to the negation of $\overline{\text{HRESET}}$	1	—	$t_{PCI_SYNC_IN}$	1, 3

Notes:

1. $t_{PCI_SYNC_IN}$ is the clock period of the input clock applied to PCI_SYNC_IN. In PCI host mode, the primary clock is applied to the CLKIN input, and PCI_SYNC_IN period depends on the value of CFG_CLKIN_DIV. See the *MPC8349EA PowerQUICC II Pro Integrated Host Processor Family Reference Manual*.
2. t_{CLKIN} is the clock period of the input clock applied to CLKIN. It is valid only in PCI host mode. See the *MPC8349EA PowerQUICC II Pro Integrated Host Processor Family Reference Manual*.
3. POR configuration signals consist of CFG_RESET_SOURCE[0:2] and CFG_CLKIN_DIV.

Table 11 lists the PLL and DLL lock times.

Table 11. PLL and DLL Lock Times

Parameter/Condition	Min	Max	Unit	Notes
PLL lock times	—	100	μs	—
DLL lock times	7680	122,880	csb_clk cycles	1, 2

Notes:

1. DLL lock times are a function of the ratio between the output clock and the coherency system bus clock (csb_clk). A 2:1 ratio results in the minimum and an 8:1 ratio results in the maximum.
2. The csb_clk is determined by the CLKIN and system PLL ratio. See Section 19, “Clocking.”

6 DDR and DDR2 SDRAM

This section describes the DC and AC electrical specifications for the DDR SDRAM interface of the MPC8343EA. Note that DDR SDRAM is GV_{DD}(typ) = 2.5 V and DDR2 SDRAM is GV_{DD}(typ) = 1.8 V. The AC electrical specifications are the same for DDR and DRR2 SDRAM.

NOTE

The information in this document is accurate for revision 3.0 silicon and later. For information on revision 1.1 silicon and earlier versions see the *MPC8343E PowerQUICC II Pro Integrated Host Processor Hardware Specifications*. See Section 22.1, "Part Numbers Fully Addressed by This Document," for silicon revision level determination.

6.1 DDR and DDR2 SDRAM DC Electrical Characteristics

Table 12 provides the recommended operating conditions for the DDR2 SDRAM component(s) of the MPC8343EA when GV_{DD}(typ) = 1.8 V.

Table 12. DDR2 SDRAM DC Electrical Characteristics for GV_{DD}(typ) = 1.8 V

Parameter/Condition	Symbol	Min	Max	Unit	Notes
I/O supply voltage	GV_{DD}	1.71	1.89	V	1
I/O reference voltage	MV_{REF}	0.49 × GV_{DD}	0.51 × GV_{DD}	V	2
I/O termination voltage	V_{TT}	MV_{REF} – 0.04	MV_{REF} + 0.04	V	3
Input high voltage	V_{IH}	MV_{REF} + 0.125	GV_{DD} + 0.3	V	—
Input low voltage	V_{IL}	–0.3	MV_{REF} – 0.125	V	—
Output leakage current	I_{OZ}	–9.9	9.9	μA	4
Output high current (V_{OUT} = 1.420 V)	I_{OH}	–13.4	—	mA	—
Output low current (V_{OUT} = 0.280 V)	I_{OL}	13.4	—	mA	—

Notes:

1. GV_{DD} is expected to be within 50 mV of the DRAM GV_{DD} at all times.
2. MV_{REF} is expected to equal 0.5 × GV_{DD}, and to track GV_{DD} DC variations as measured at the receiver. Peak-to-peak noise on MV_{REF} cannot exceed ±2% of the DC value.
3. V_{TT} is not applied directly to the device. It is the supply to which far end signal termination is made and is expected to equal MV_{REF}. This rail should track variations in the DC level of MV_{REF}.
4. Output leakage is measured with all outputs disabled, 0 V ≤ V_{OUT} ≤ GV_{DD}.

Table 13 provides the DDR2 capacitance when $GV_{DD}(typ) = 1.8$ V.

Table 13. DDR2 SDRAM Capacitance for $GV_{DD}(typ) = 1.8$ V

Parameter/Condition	Symbol	Min	Max	Unit	Notes
Input/output capacitance: DQ, DQS, $\overline{DQS}$	C_{IO}	6	8	pF	1
Delta input/output capacitance: DQ, DQS, $\overline{DQS}$	C_{DIO}	—	0.5	pF	1

Note:
1. This parameter is sampled. $GV_{DD} = 1.8$ V ± 0.090 V, f = 1 MHz, $T_A = 25°C$, $V_{OUT} = GV_{DD}/2$, V_{OUT} (peak-to-peak) = 0.2 V.

Table 14 provides the recommended operating conditions for the DDR SDRAM component(s) when $GV_{DD}(typ) = 2.5$ V.

Table 14. DDR SDRAM DC Electrical Characteristics for $GV_{DD}(typ) = 2.5$ V

Parameter/Condition	Symbol	Min	Max	Unit	Notes
I/O supply voltage	GV_{DD}	2.375	2.625	V	1
I/O reference voltage	MV_{REF}	$0.49 \times GV_{DD}$	$0.51 \times GV_{DD}$	V	2
I/O termination voltage	V_{TT}	$MV_{REF} - 0.04$	$MV_{REF} + 0.04$	V	3
Input high voltage	V_{IH}	$MV_{REF} + 0.18$	$GV_{DD} + 0.3$	V	—
Input low voltage	V_{IL}	–0.3	$MV_{REF} - 0.18$	V	—
Output leakage current	I_{OZ}	–9.9	–9.9	μA	4
Output high current ($V_{OUT} = 1.95$ V)	I_{OH}	–15.2	—	mA	—
Output low current ($V_{OUT} = 0.35$ V)	I_{OL}	15.2	—	mA	—

Notes:
1. GV_{DD} is expected to be within 50 mV of the DRAM GV_{DD} at all times.
2. MV_{REF} is expected to be equal to $0.5 \times GV_{DD}$, and to track GV_{DD} DC variations as measured at the receiver. Peak-to-peak noise on MV_{REF} may not exceed ±2% of the DC value.
3. V_{TT} is not applied directly to the device. It is the supply to which far end signal termination is made and is expected to be equal to MV_{REF}. This rail should track variations in the DC level of MV_{REF}.
4. Output leakage is measured with all outputs disabled, $0 \text{ V} \le V_{OUT} \le GV_{DD}$.

Table 15 provides the DDR capacitance when $GV_{DD}(typ) = 2.5$ V.

Table 15. DDR SDRAM Capacitance for $GV_{DD}(typ) = 2.5$ V

Parameter/Condition	Symbol	Min	Max	Unit	Notes
Input/output capacitance: DQ, DQS	C_{IO}	6	8	pF	1
Delta input/output capacitance: DQ, DQS	C_{DIO}	—	0.5	pF	1

Note:
1. This parameter is sampled. $GV_{DD} = 2.5$ V ± 0.125 V, f = 1 MHz, $T_A = 25°C$, $V_{OUT} = GV_{DD}/2$, V_{OUT} (peak-to-peak) = 0.2 V.

Table 16 provides the current draw characteristics for MV_{REF}.

Table 16. Current Draw Characteristics for MV_{REF}

Parameter/Condition	Symbol	Min	Max	Unit	Note
Current draw for MV_{REF}	I_{MVREF}	—	500	μA	1

Note:
1. The voltage regulator for MV_{REF} must supply up to 500 μA current.

6.2 DDR and DDR2 SDRAM AC Electrical Characteristics

This section provides the AC electrical characteristics for the DDR and DDR2 SDRAM interface.

6.2.1 DDR and DDR2 SDRAM Input AC Timing Specifications

Table 17 provides the input AC timing specifications for the DDR2 SDRAM when GV_{DD}(typ) = 1.8 V.

Table 17. DDR2 SDRAM Input AC Timing Specifications for 1.8-V Interface

At recommended operating conditions with GV_{DD} of 1.8 ± 5%.

Parameter	Symbol	Min	Max	Unit	Notes
AC input low voltage	V_{IL}	—	MV_{REF} – 0.25	V	—
AC input high voltage	V_{IH}	MV_{REF} + 0.25	—	V	—

Table 18 provides the input AC timing specifications for the DDR SDRAM when GV_{DD}(typ) = 2.5 V.

Table 18. DDR SDRAM Input AC Timing Specifications for 2.5-V Interface

At recommended operating conditions with GV_{DD} of 2.5 ± 5%.

Parameter	Symbol	Min	Max	Unit	Notes
AC input low voltage	V_{IL}	—	MV_{REF} – 0.31	V	—
AC input high voltage	V_{IH}	MV_{REF} + 0.31	—	V	—

Table 19 provides the input AC timing specifications for the DDR SDRAM interface.

Table 19. DDR and DDR2 SDRAM Input AC Timing Specifications

At recommended operating conditions with GV_{DD} of (1.8 or 2.5 V) ± 5%.

Parameter	Symbol	Min	Max	Unit	Notes
Controller Skew for MDQS—MDQ/MECC/MDM	t_{CISKEW}			ps	1, 2
400 MHz		–600	600		3
333 MHz		–750	750		—

Table 19. DDR and DDR2 SDRAM Input AC Timing Specifications (continued)

At recommended operating conditions with GV_{DD} of (1.8 or 2.5 V) ± 5%.

Parameter	Symbol	Min	Max	Unit	Notes
266 MHz		–750	750		—
200 MHz		–750	750		—

Notes:

1. t_{CISKEW} represents the total amount of skew consumed by the controller between MDQS[n] and any corresponding bit that will be captured with MDQS[n]. This should be subtracted from the total timing budget.
2. The amount of skew that can be tolerated from MDQS to a corresponding MDQ signal is called t_{DISKEW}. This can be determined by the equation: $t_{DISKEW} = \pm (T/4 - abs(t_{CISKEW}))$; where T is the clock period and abs (t_{CISKEW}) is the absolute value of t_{CISKEW}.
3. This specification applies only to the DDR interface.

Figure 5 illustrates the DDR input timing diagram showing the t_{DISKEW} timing parameter.

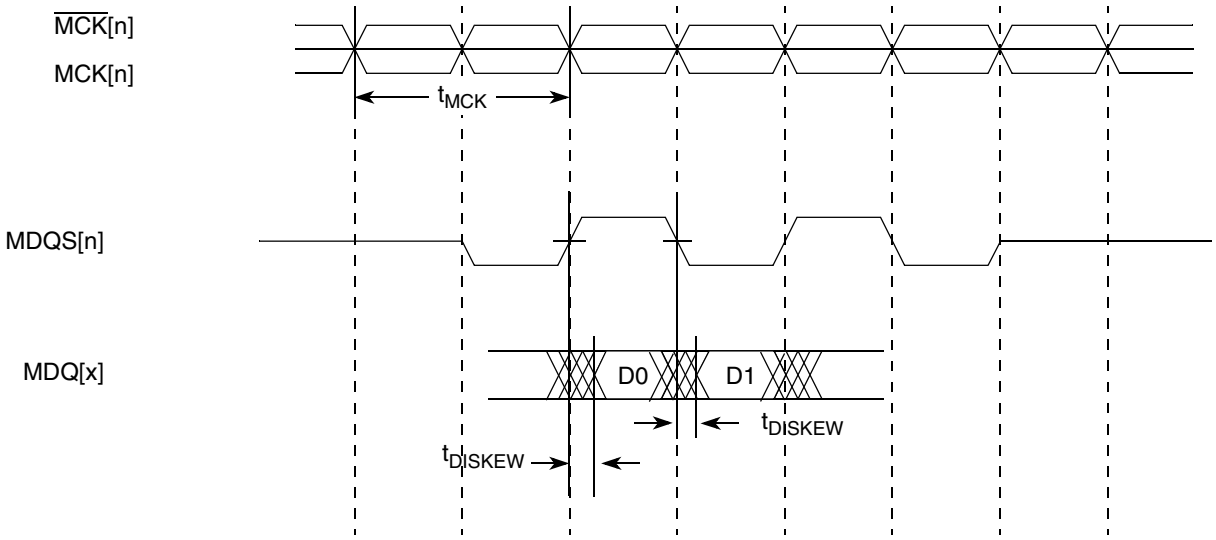

Figure 5. DDR Input Timing Diagram

6.2.2 DDR and DDR2 SDRAM Output AC Timing Specifications

Table 20 shows the DDR and DDR2 output AC timing specifications.

Table 20. DDR and DDR2 SDRAM Output AC Timing Specifications

At recommended operating conditions with GV_{DD} of (1.8 or 2.5 V) ± 5%.

Parameter	Symbol [1]	Min	Max	Unit	Notes
MCK[n] cycle time, (MCK[n]/MCK[n] crossing)	t_{MCK}	7.5	10	ns	2
ADDR/CMD/MODT output setup with respect to MCK	t_{DDKHAS}			ns	3
400 MHz		1.95	—		
333 MHz		2.40	—		
266 MHz		3.15	—		
200 MHz		4.20	—		

Table 20. DDR and DDR2 SDRAM Output AC Timing Specifications (continued)

At recommended operating conditions with GV_{DD} of (1.8 or 2.5 V) ± 5%.

Parameter	Symbol [1]	Min	Max	Unit	Notes
ADDR/CMD/MODT output hold with respect to MCK	t_{DDKHAX}			ns	3
400 MHz		1.95	—		
333 MHz		2.40	—		
266 MHz		3.15	—		
200 MHz		4.20	—		
$\overline{MCS}$(n) output setup with respect to MCK	t_{DDKHCS}			ns	3
400 MHz		1.95	—		
333 MHz		2.40	—		
266 MHz		3.15	—		
200 MHz		4.20	—		
$\overline{MCS}$(n) output hold with respect to MCK	t_{DDKHCX}			ns	3
400 MHz		1.95	—		
333 MHz		2.40	—		
266 MHz		3.15	—		
200 MHz		4.20	—		
MCK to MDQS Skew	t_{DDKHMH}	–0.6	0.6	ns	4
MDQ/MECC/MDM output setup with respect to MDQS	t_{DDKHDS}, t_{DDKLDS}			ps	5
400 MHz		700	—		
333 MHz		775	—		
266 MHz		1100	—		
200 MHz		1200	—		
MDQ/MECC/MDM output hold with respect to MDQS	t_{DDKHDX}, t_{DDKLDX}			ps	5
400 MHz		700	—		
333 MHz		900	—		
266 MHz		1100	—		
200 MHz		1200	—		
MDQS preamble start	t_{DDKHMP}	$-0.5 \times t_{MCK} - 0.6$	$-0.5 \times t_{MCK} + 0.6$	ns	6

Table 20. DDR and DDR2 SDRAM Output AC Timing Specifications (continued)

At recommended operating conditions with GV_{DD} of (1.8 or 2.5 V) ± 5%.

Parameter	Symbol [1]	Min	Max	Unit	Notes
MDQS epilogue end	t_{DDKHME}	–0.6	0.6	ns	6

Notes:

1. The symbols for timing specifications follow the pattern of $t_{\text{(first two letters of functional block)(signal)(state)(reference)(state)}}$ for inputs and $t_{\text{(first two letters of functional block)(reference)(state)(signal)(state)}}$ for outputs. Output hold time can be read as DDR timing (DD) from the rising or falling edge of the reference clock (KH or KL) until the output goes invalid (AX or DX). For example, t_{DDKHAS} symbolizes DDR timing (DD) for the time t_{MCK} memory clock reference (K) goes from the high (H) state until outputs (A) are set up (S) or output valid time. Also, t_{DDKLDX} symbolizes DDR timing (DD) for the time t_{MCK} memory clock reference (K) goes low (L) until data outputs (D) are invalid (X) or data output hold time.
2. All MCK/$\overline{\text{MCK}}$ referenced measurements are made from the crossing of the two signals ±0.1 V.
3. ADDR/CMD includes all DDR SDRAM output signals except MCK/$\overline{\text{MCK}}$, $\overline{\text{MCS}}$, and MDQ/MECC/MDM/MDQS. For the ADDR/CMD setup and hold specifications, it is assumed that the clock control register is set to adjust the memory clocks by 1/2 applied cycle.
4. t_{DDKHMH} follows the symbol conventions described in note 1. For example, t_{DDKHMH} describes the DDR timing (DD) from the rising edge of the MCK(n) clock (KH) until the MDQS signal is valid (MH). t_{DDKHMH} can be modified through control of the DQSS override bits in the TIMING_CFG_2 register and is typically set to the same delay as the clock adjust in the CLK_CNTL register. The timing parameters listed in the table assume that these two parameters are set to the same adjustment value. See the *MPC8349EA PowerQUICC II Pro Integrated Host Processor Family Reference Manual* for the timing modifications enabled by use of these bits.
5. Determined by maximum possible skew between a data strobe (MDQS) and any corresponding bit of data (MDQ), ECC (MECC), or data mask (MDM). The data strobe should be centered inside the data eye at the pins of the microprocessor.
6. All outputs are referenced to the rising edge of MCK(n) at the pins of the microprocessor. Note that t_{DDKHMP} follows the symbol conventions described in note 1.

Figure 6 shows the DDR SDRAM output timing for the MCK to MDQS skew measurement (t_{DDKHMH}).

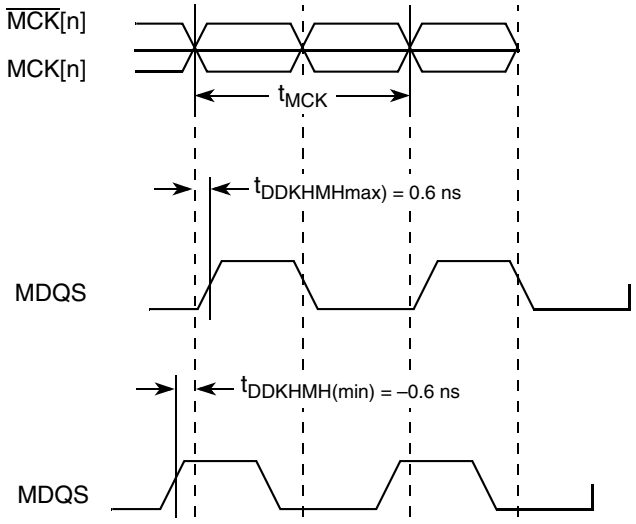

Figure 6. Timing Diagram for t_{DDKHMH}

Figure 7 shows the DDR SDRAM output timing diagram.

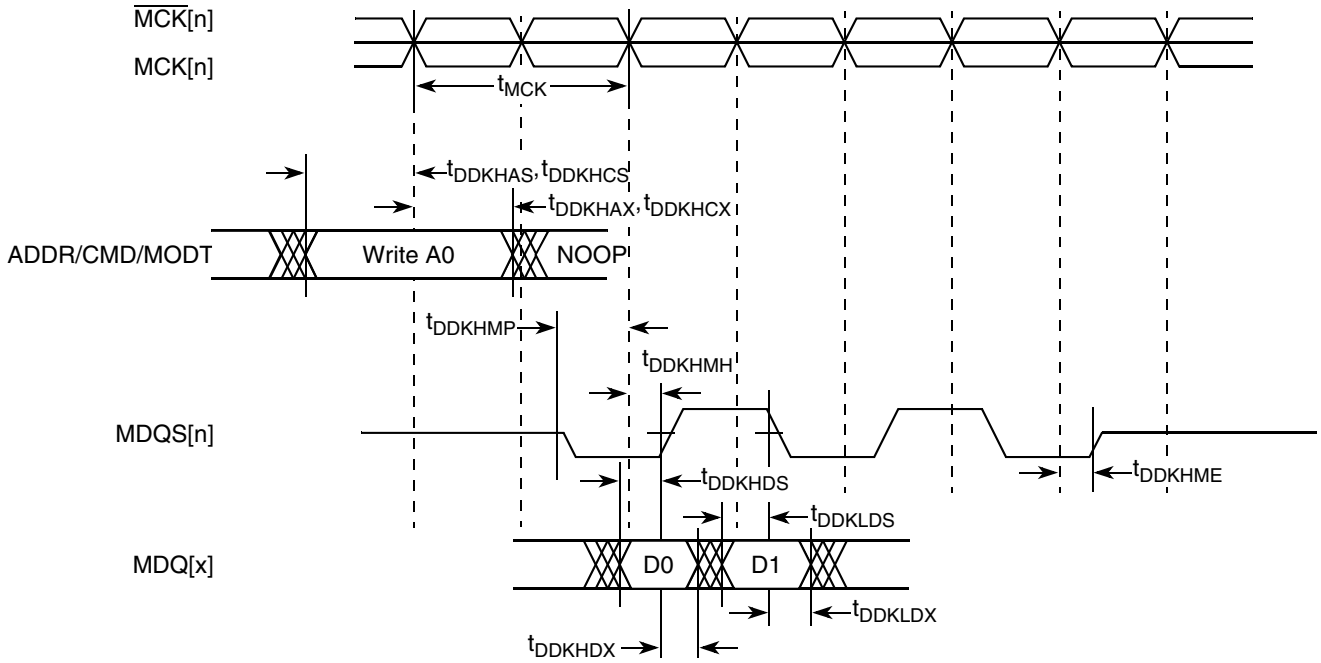

Figure 7. DDR SDRAM Output Timing Diagram

Figure 8 provides the AC test load for the DDR bus.

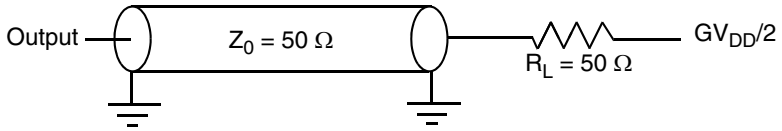

Figure 8. DDR AC Test Load

7 DUART

This section describes the DC and AC electrical specifications for the DUART interface of the MPC8343EA.

7.1 DUART DC Electrical Characteristics

Table 21 provides the DC electrical characteristics for the DUART interface of the MPC8343EA.

Table 21. DUART DC Electrical Characteristics

Parameter	Symbol	Min	Max	Unit
High-level input voltage	V_{IH}	2	OV_{DD} + 0.3	V
Low-level input voltage	V_{IL}	–0.3	0.8	V
Input current (0.8 V ≤ V_{IN} ≤ 2 V)	I_{IN}	—	±5	μA

Table 21. DUART DC Electrical Characteristics (continued)

Parameter	Symbol	Min	Max	Unit
High-level output voltage, I_{OH} = –100 μA	V_{OH}	OV_{DD} – 0.2	—	V
Low-level output voltage, I_{OL} = 100 μA	V_{OL}	—	0.2	V

7.2 DUART AC Electrical Specifications

Table 22 provides the AC timing parameters for the DUART interface of the MPC8343EA.

Table 22. DUART AC Timing Specifications

Parameter	Value	Unit	Notes
Minimum baud rate	256	baud	—
Maximum baud rate	> 1,000,000	baud	1
Oversample rate	16	—	2

Notes:
1. Actual attainable baud rate will be limited by the latency of interrupt processing.
2. The middle of a start bit is detected as the 8th sampled 0 after the 1-to-0 transition of the start bit. Subsequent bit values are sampled each 16th sample.

8 Ethernet: Three-Speed Ethernet, MII Management

This section provides the AC and DC electrical characteristics for three-speeds (10/100/1000 Mbps) and MII management.

8.1 Three-Speed Ethernet Controller (TSEC)—MII/RGMII/RTBI Electrical Characteristics

The electrical characteristics specified here apply to media independent interface (MII), reduced gigabit media independent interface (RGMII), and reduced ten-bit interface (RTBI) signals except management data input/output (MDIO) and management data clock (MDC). The MII interface is defined for 3.3 V, and the RGMII and RTBI interfaces are defined for 2.5 V. The RGMII and RTBI interfaces follow the Hewlett-Packard *Reduced Pin-Count Interface for Gigabit Ethernet Physical Layer Device Specification*, Version 1.2a (9/22/2000). The electrical characteristics for MDIO and MDC are specified in Section 8.3, "Ethernet Management Interface Electrical Characteristics."

8.1.1 TSEC DC Electrical Characteristics

MII, RGMII, and RTBI drivers and receivers comply with the DC parametric attributes specified in Table 23 and Table 24. The RGMII and RTBI signals in Table 24 are based on a 2.5-V CMOS interface voltage as defined by JEDEC EIA/JESD8-5.

Table 23. MII DC Electrical Characteristics

Parameter	Symbol	Conditions		Min	Max	Unit
Supply voltage 3.3 V	LV_{DD}[2]	—		2.97	3.63	V
Output high voltage	V_{OH}	I_{OH} = –4.0 mA	LV_{DD} = Min	2.40	LV_{DD} + 0.3	V
Output low voltage	V_{OL}	I_{OL} = 4.0 mA	LV_{DD} = Min	GND	0.50	V
Input high voltage	V_{IH}	—	—	2.0	LV_{DD} + 0.3	V
Input low voltage	V_{IL}	—	—	–0.3	0.90	V
Input high current	I_{IH}	V_{IN}[1] = LV_{DD}		—	40	μA
Input low current	I_{IL}	V_{IN}[1] = GND		–600	—	μA

Notes:
1. The symbol V_{IN}, in this case, represents the LV_{IN} symbol referenced in Table 1 and Table 2.
2. MII pins not needed for RGMII or RTBI operation are powered by the OV_{DD} supply.

Table 24. RGMII/RTBI (When Operating at 2.5 V) DC Electrical Characteristics

Parameters	Symbol	Conditions		Min	Max	Unit
Supply voltage 2.5 V	LV_{DD}	—		2.37	2.63	V
Output high voltage	V_{OH}	I_{OH} = –1.0 mA	LV_{DD} = Min	2.00	LV_{DD} + 0.3	V
Output low voltage	V_{OL}	I_{OL} = 1.0 mA	LV_{DD} = Min	GND – 0.3	0.40	V
Input high voltage	V_{IH}	—	LV_{DD} = Min	1.7	LV_{DD} + 0.3	V
Input low voltage	V_{IL}	—	LV_{DD} = Min	–0.3	0.70	V
Input high current	I_{IH}	V_{IN}[1] = LV_{DD}		—	10	μA
Input low current	I_{IL}	V_{IN}[1] = GND		–15	—	μA

Note:
1. The symbol V_{IN}, in this case, represents the LV_{IN} symbol referenced in Table 1 and Table 2.

8.2 MII, RGMII, and RTBI AC Timing Specifications

The AC timing specifications for MII, RGMII, and RTBI are presented in this section.

8.2.1 MII AC Timing Specifications

This section describes the MII transmit and receive AC timing specifications.

8.2.1.1 MII Transmit AC Timing Specifications

Table 25 provides the MII transmit AC timing specifications.

Table 25. MII Transmit AC Timing Specifications

At recommended operating conditions with LV_{DD}/OV_{DD} of 3.3 V ± 10%.

Parameter/Condition	Symbol[1]	Min	Typ	Max	Unit
TX_CLK clock period 10 Mbps	t_{MTX}	—	400	—	ns
TX_CLK clock period 100 Mbps	t_{MTX}	—	40	—	ns
TX_CLK duty cycle	t_{MTXH}/t_{MTX}	35	—	65	%
TX_CLK to MII data TXD[3:0], TX_ER, TX_EN delay	t_{MTKHDX}	1	5	15	ns
TX_CLK data clock rise (20%–80%)	t_{MTXR}	1.0	—	4.0	ns
TX_CLK data clock fall (80%–20%)	t_{MTXF}	1.0	—	4.0	ns

Note:

1. The symbols for timing specifications follow the pattern of $t_{\text{(first two letters of functional block)(signal)(state)(reference)(state)}}$ for inputs and $t_{\text{(first two letters of functional block)(reference)(state)(signal)(state)}}$ for outputs. For example, t_{MTKHDX} symbolizes MII transmit timing (MT) for the time t_{MTX} clock reference (K) going high (H) until data outputs (D) are invalid (X). In general, the clock reference symbol is based on two to three letters representing the clock of a particular function. For example, the subscript of t_{MTX} represents the MII(M) transmit (TX) clock. For rise and fall times, the latter convention is used with the appropriate letter: R (rise) or F (fall).

Figure 9 shows the MII transmit AC timing diagram.

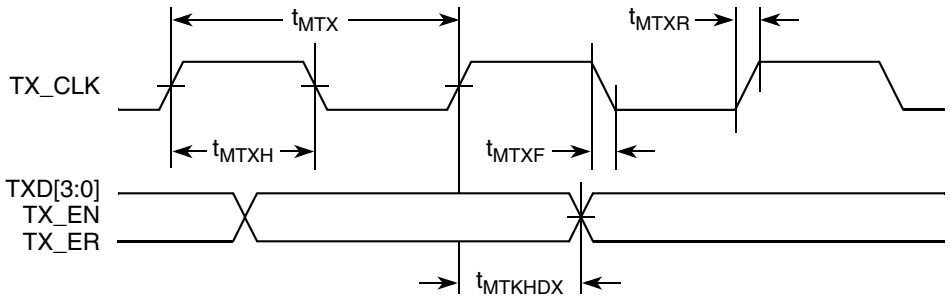

Figure 9. MII Transmit AC Timing Diagram

8.2.1.2 MII Receive AC Timing Specifications

Table 26 provides the MII receive AC timing specifications.

Table 26. MII Receive AC Timing Specifications

At recommended operating conditions with LV_{DD}/OV_{DD} of 3.3 V ± 10%.

Parameter/Condition	Symbol[1]	Min	Typ	Max	Unit
RX_CLK clock period 10 Mbps	t_{MRX}	—	400	—	ns
RX_CLK clock period 100 Mbps	t_{MRX}	—	40	—	ns
RX_CLK duty cycle	t_{MRXH}/t_{MRX}	35	—	65	%
RXD[3:0], RX_DV, RX_ER setup time to RX_CLK	t_{MRDVKH}	10.0	—	—	ns
RXD[3:0], RX_DV, RX_ER hold time to RX_CLK	t_{MRDXKH}	10.0	—	—	ns
RX_CLK clock rise (20%–80%)	t_{MRXR}	1.0	—	4.0	ns
RX_CLK clock fall time (80%–20%)	t_{MRXF}	1.0	—	4.0	ns

Note:

1. The symbols for timing specifications follow the pattern of $t_{\text{(first two letters of functional block)(signal)(state)(reference)(state)}}$ for inputs and $t_{\text{(first two letters of functional block)(reference)(state)(signal)(state)}}$ for outputs. For example, t_{MRDVKH} symbolizes MII receive timing (MR) with respect to the time data input signals (D) reach the valid state (V) relative to the t_{MRX} clock reference (K) going to the high (H) state or setup time. Also, t_{MRDXKL} symbolizes MII receive timing (GR) with respect to the time data input signals (D) went invalid (X) relative to the t_{MRX} clock reference (K) going to the low (L) state or hold time. In general, the clock reference symbol is based on three letters representing the clock of a particular function. For example, the subscript of t_{MRX} represents the MII (M) receive (RX) clock. For rise and fall times, the latter convention is used with the appropriate letter: R (rise) or F (fall).

Figure 10 provides the AC test load for TSEC.

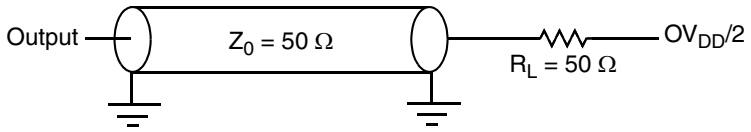

Figure 10. TSEC AC Test Load

Figure 11 shows the MII receive AC timing diagram.

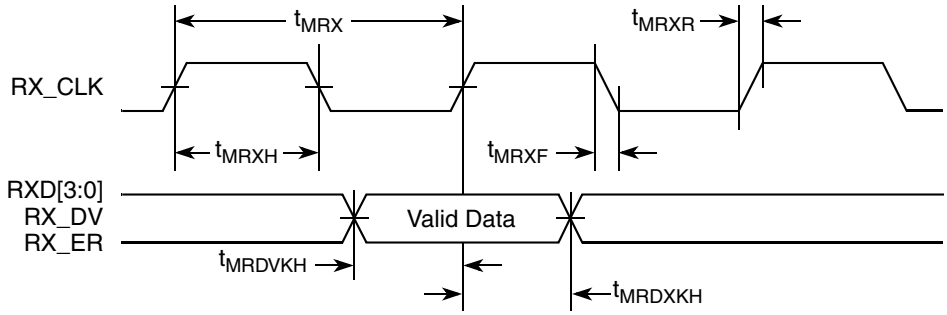

Figure 11. MII Receive AC Timing Diagram

8.2.2 RGMII and RTBI AC Timing Specifications

Table 27 presents the RGMII and RTBI AC timing specifications.

Table 27. RGMII and RTBI AC Timing Specifications

At recommended operating conditions with LV_{DD} of 2.5 V ± 5%.

Parameter/Condition	Symbol[1]	Min	Typ	Max	Unit
Data to clock output skew (at transmitter)	t_{SKRGT}	–0.5	—	0.5	ns
Data to clock input skew (at receiver)[2]	t_{SKRGT}	1.0	—	2.8	ns
Clock cycle duration[3]	t_{RGT}	7.2	8.0	8.8	ns
Duty cycle for 1000Base-T[4, 5]	t_{RGTH}/t_{RGT}	45	50	55	%
Duty cycle for 10BASE-T and 100BASE-TX[3, 5]	t_{RGTH}/t_{RGT}	40	50	60	%
Rise time (20%–80%)	t_{RGTR}	—	—	0.75	ns
Fall time (80%–20%)	t_{RGTF}	—	—	0.75	ns

Notes:

1. In general, the clock reference symbol for this section is based on the symbols RGT to represent RGMII and RTBI timing. For example, the subscript of t_{RGT} represents the TBI (T) receive (RX) clock. Also, the notation for rise (R) and fall (F) times follows the clock symbol. For symbols representing skews, the subscript is SK followed by the clock being skewed (RGT).
2. This implies that PC board design requires clocks to be routed so that an additional trace delay of greater than 1.5 ns is added to the associated clock signal.
3. For 10 and 100 Mbps, t_{RGT} scales to 400 ns ± 40 ns and 40 ns ± 4 ns, respectively.
4. Duty cycle may be stretched/shrunk during speed changes or while transitioning to a received packet clock domains as long as the minimum duty cycle is not violated and stretching occurs for no more than three t_{RGT} of the lowest speed transitioned.
5. Duty cycle reference is $LV_{DD}/2$.

Figure 12 shows the RBMII and RTBI AC timing and multiplexing diagrams.

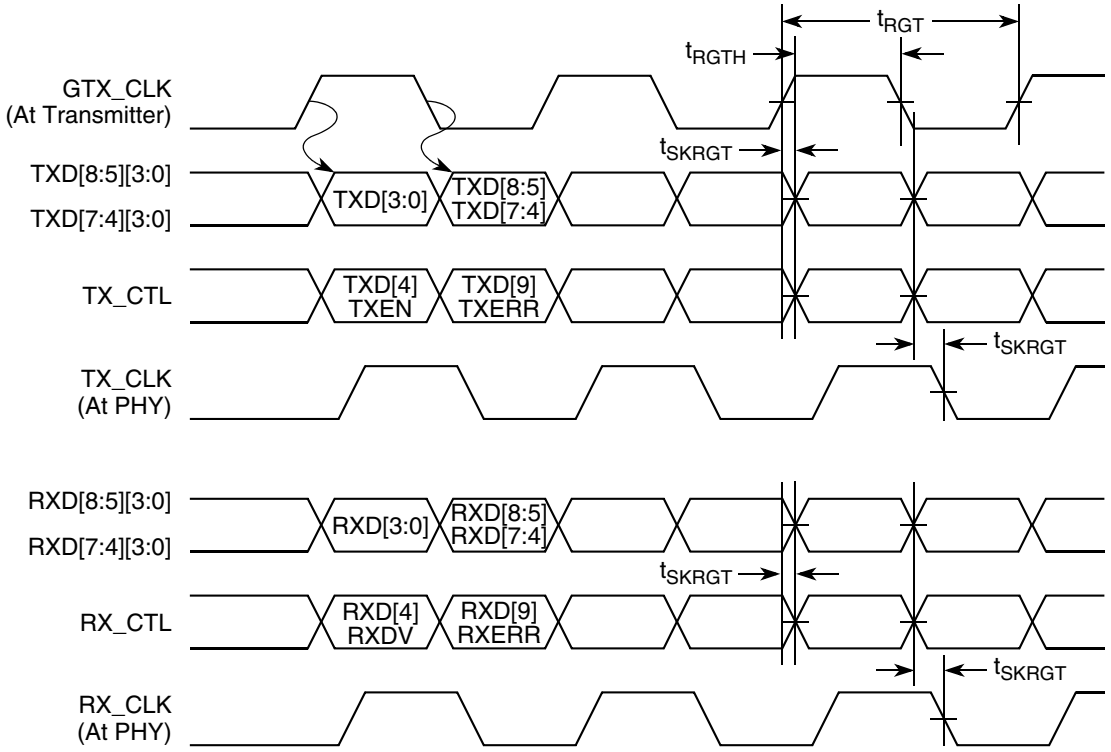

Figure 12. RGMII and RTBI AC Timing and Multiplexing Diagrams

8.3 Ethernet Management Interface Electrical Characteristics

The electrical characteristics specified here apply to the MII management interface signals management data input/output (MDIO) and management data clock (MDC). The electrical characteristics for GMII, RGMII, TBI and RTBI are specified in Section 8.1, "Three-Speed Ethernet Controller (TSEC)—MII/RGMII/RTBI Electrical Characteristics."

8.3.1 MII Management DC Electrical Characteristics

The MDC and MDIO are defined to operate at a supply voltage of 2.5 or 3.3 V. The DC electrical characteristics for MDIO and MDC are provided in Table 28 and Table 29.

Table 28. MII Management DC Electrical Characteristics Powered at 2.5 V

Parameter	Symbol	Conditions		Min	Max	Unit
Supply voltage (2.5 V)	LV_{DD}	—		2.37	2.63	V
Output high voltage	V_{OH}	I_{OH} = –1.0 mA	LV_{DD} = Min	2.00	LV_{DD} + 0.3	V
Output low voltage	V_{OL}	I_{OL} = 1.0 mA	LV_{DD} = Min	GND – 0.3	0.40	V
Input high voltage	V_{IH}	—	LV_{DD} = Min	1.7	—	V
Input low voltage	V_{IL}	—	LV_{DD} = Min	–0.3	0.70	V

Table 28. MII Management DC Electrical Characteristics Powered at 2.5 V (continued)

Parameter	Symbol	Conditions	Min	Max	Unit
Input high current	I_{IH}	V_{IN}[1] = LV_{DD}	—	10	μA
Input low current	I_{IL}	V_{IN} = LV_{DD}	–15	—	μA

Note:
1. The symbol V_{IN}, in this case, represents the LV_{IN} symbol referenced in Table 1 and Table 2.

Table 29. MII Management DC Electrical Characteristics Powered at 3.3 V

Parameter	Symbol	Conditions		Min	Max	Unit
Supply voltage (3.3 V)	LV_{DD}	—		2.97	3.63	V
Output high voltage	V_{OH}	I_{OH} = –1.0 mA	LV_{DD} = Min	2.10	LV_{DD} + 0.3	V
Output low voltage	V_{OL}	I_{OL} = 1.0 mA	LV_{DD} = Min	GND	0.50	V
Input high voltage	V_{IH}	—		2.00	—	V
Input low voltage	V_{IL}	—		—	0.80	V
Input high current	I_{IH}	LV_{DD} = Max	V_{IN}[1] = 2.1 V	—	40	μA
Input low current	I_{IL}	LV_{DD} = Max	V_{IN} = 0.5 V	–600	—	μA

Note:
1. The symbol V_{IN}, in this case, represents the LV_{IN} symbol referenced in Table 1 and Table 2.

8.3.2 MII Management AC Electrical Specifications

Table 30 provides the MII management AC timing specifications.

Table 30. MII Management AC Timing Specifications

At recommended operating conditions with LV_{DD} is 3.3 V ± 10% or 2.5 V ± 5%.

Parameter/Condition	Symbol[1]	Min	Typ	Max	Unit	Notes
MDC frequency	f_{MDC}	—	2.5	—	MHz	2
MDC period	t_{MDC}	—	400	—	ns	—
MDC clock pulse width high	t_{MDCH}	32	—	—	ns	—
MDC to MDIO delay	t_{MDKHDX}	10	—	70	ns	3
MDIO to MDC setup time	t_{MDDVKH}	5	—	—	ns	—
MDIO to MDC hold time	t_{MDDXKH}	0	—	—	ns	—
MDC rise time	t_{MDCR}	—	—	10	ns	—

Table 30. MII Management AC Timing Specifications (continued)

At recommended operating conditions with LV_{DD} is 3.3 V ± 10% or 2.5 V ± 5%.

Parameter/Condition	Symbol[1]	Min	Typ	Max	Unit	Notes
MDC fall time	t_{MDHF}	—	—	10	ns	—

Notes:

1. The symbols for timing specifications follow the pattern of $t_{\text{(first two letters of functional block)(signal)(state)(reference)(state)}}$ for inputs and $t_{\text{(first two letters of functional block)(reference)(state)(signal)(state)}}$ for outputs. For example, t_{MDKHDX} symbolizes management data timing (MD) for the time t_{MDC} from clock reference (K) high (H) until data outputs (D) are invalid (X) or data hold time. Also, t_{MDDVKH} symbolizes management data timing (MD) with respect to the time data input signals (D) reach the valid state (V) relative to the t_{MDC} clock reference (K) going to the high (H) state or setup time. For rise and fall times, the latter convention is used with the appropriate letter: R (rise) or F (fall).
2. This parameter is dependent on the csb_clk speed (that is, for a csb_clk of 267 MHz, the maximum frequency is 8.3 MHz and the minimum frequency is 1.2 MHz; for a csb_clk of 375 MHz, the maximum frequency is 11.7 MHz and the minimum frequency is 1.7 MHz).
3. This parameter is dependent on the csb_clk speed (that is, for a csb_clk of 267 MHz, the delay is 70 ns and for a csb_clk of 333 MHz, the delay is 58 ns).

Figure 13 shows the MII management AC timing diagram.

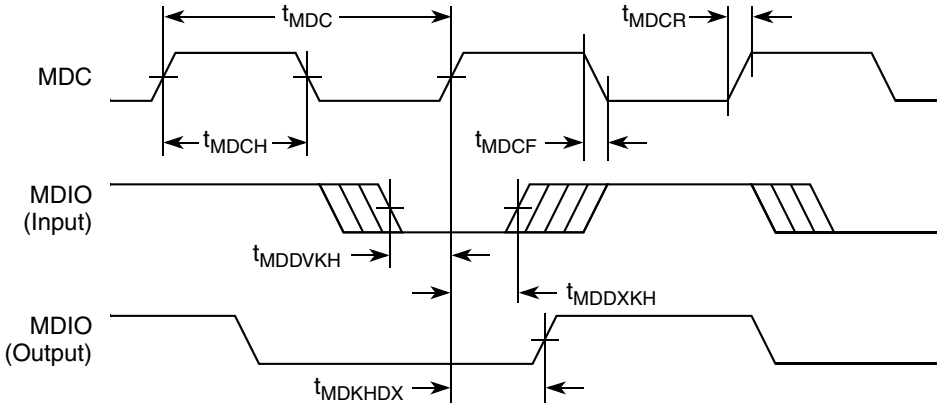

Figure 13. MII Management Interface Timing Diagram

9 USB

This section provides the AC and DC electrical specifications for the USB interface of the MPC8343EA.

9.1 USB DC Electrical Characteristics

Table 31 provides the DC electrical characteristics for the USB interface.

Table 31. USB DC Electrical Characteristics

Parameter	Symbol	Min	Max	Unit
High-level input voltage	V_{IH}	2	OV_{DD} + 0.3	V
Low-level input voltage	V_{IL}	–0.3	0.8	V
Input current	I_{IN}	—	±5	μA
High-level output voltage, I_{OH} = –100 μA	V_{OH}	OV_{DD} – 0.2	—	V
Low-level output voltage, I_{OL} = 100 μA	V_{OL}	—	0.2	V

9.2 USB AC Electrical Specifications

Table 32 describes the general timing parameters of the USB interface of the MPC8343EA.

Table 32. USB General Timing Parameters (ULPI Mode Only)

Parameter	Symbol[1]	Min	Max	Unit	Notes
USB clock cycle time	t_{USCK}	15	—	ns	2–5
Input setup to USB clock—all inputs	t_{USIVKH}	4	—	ns	2–5
Input hold to USB clock—all inputs	t_{USIXKH}	1	—	ns	2–5
USB clock to output valid—all outputs	t_{USKHOV}	—	7	ns	2–5
Output hold from USB clock—all outputs	t_{USKHOX}	2	—	ns	2–5

Notes:

1. The symbols for timing specifications follow the pattern of $t_{\text{(first two letters of functional block)(signal)(state)(reference)(state)}}$ for inputs and $t_{\text{(first two letters of functional block)(reference)(state)(signal)(state)}}$ for outputs. For example, t_{USIXKH} symbolizes USB timing (US) for the input (I) to go invalid (X) with respect to the time the USB clock reference (K) goes high (H). Also, t_{USKHOX} symbolizes USB timing (US) for the USB clock reference (K) to go high (H), with respect to the output (O) going invalid (X) or output hold time.
2. All timings are in reference to USB clock.
3. All signals are measured from $OV_{DD}/2$ of the rising edge of the USB clock to 0.4 × OV_{DD} of the signal in question for 3.3 V signaling levels.
4. Input timings are measured at the pin.
5. For active/float timing measurements, the Hi-Z or off-state is defined to be when the total current delivered through the component pin is less than or equal to that of the leakage current specification.

Figure 14 and Figure 15 provide the AC test load and signals for the USB, respectively.

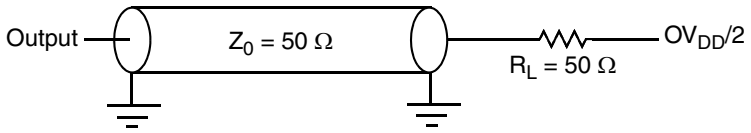

Figure 14. USB AC Test Load

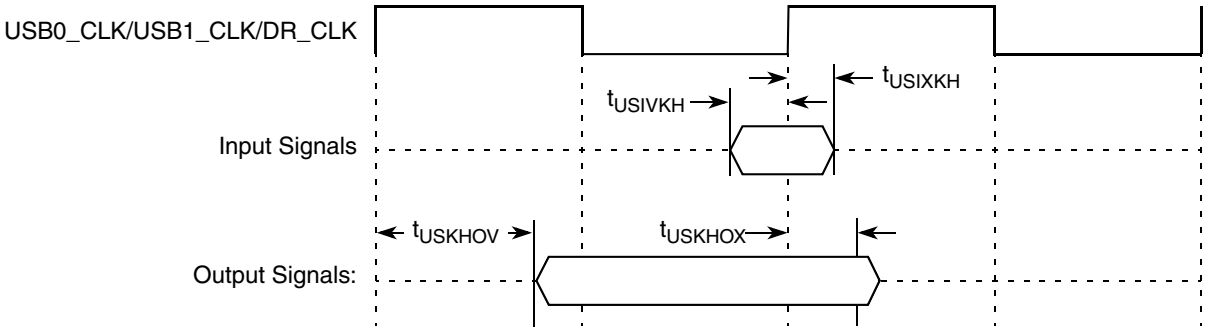

Figure 15. USB Signals

10 Local Bus

This section describes the DC and AC electrical specifications for the local bus interface of the MPC8343EA.

10.1 Local Bus DC Electrical Characteristics

Table 33 provides the DC electrical characteristics for the local bus interface.

Table 33. Local Bus DC Electrical Characteristics

Parameter	Symbol	Min	Max	Unit
High-level input voltage	V_{IH}	2	OV_{DD} + 0.3	V
Low-level input voltage	V_{IL}	–0.3	0.8	V
Input current	I_{IN}	—	±5	μA
High-level output voltage, I_{OH} = –100 μA	V_{OH}	OV_{DD} – 0.2	—	V
Low-level output voltage, I_{OL} = 100 μA	V_{OL}	—	0.2	V

10.2 Local Bus AC Electrical Specification

Table 34 and Table 35 describe the general timing parameters of the local bus interface of the MPC8343EA.

Table 34. Local Bus General Timing Parameters—DLL On

Parameter	Symbol[1]	Min	Max	Unit	Notes
Local bus cycle time	t_{LBK}	7.5	—	ns	2
Input setup to local bus clock (except LUPWAIT)	$t_{LBIVKH1}$	1.5	—	ns	3, 4
LUPWAIT input setup to local bus clock	$t_{LBIVKH2}$	2.2	—	ns	3, 4
Input hold from local bus clock (except LUPWAIT)	$t_{LBIXKH1}$	1.0	—	ns	3, 4
LUPWAIT Input hold from local bus clock	$t_{LBIXKH2}$	1.0	—	ns	3, 4
LALE output fall to LAD output transition (LATCH hold time)	$t_{LBOTOT1}$	1.5	—	ns	5
LALE output fall to LAD output transition (LATCH hold time)	$t_{LBOTOT2}$	3	—	ns	6
LALE output fall to LAD output transition (LATCH hold time)	$t_{LBOTOT3}$	2.5	—	ns	7
Local bus clock to LALE rise	t_{LBKHLR}	—	4.5	ns	—
Local bus clock to output valid (except LAD/LDP and LALE)	$t_{LBKHOV1}$	—	4.5	ns	—
Local bus clock to data valid for LAD/LDP	$t_{LBKHOV2}$	—	4.5	ns	3
Local bus clock to address valid for LAD	$t_{LBKHOV3}$	—	4.5	ns	3
Output hold from local bus clock (except LAD/LDP and LALE)	$t_{LBKHOX1}$	1	—	ns	3
Output hold from local bus clock for LAD/LDP	$t_{LBKHOX2}$	1	—	ns	3
Local bus clock to output high impedance for LAD/LDP	t_{LBKHOZ}	—	3.8	ns	8

Notes:

1. The symbols for timing specifications follow the pattern of $t_{\text{(first two letters of functional block)(signal)(state)(reference)(state)}}$ for inputs and $t_{\text{(first two letters of functional block)(reference)(state)(signal)(state)}}$ for outputs. For example, $t_{LBIXKH1}$ symbolizes local bus timing (LB) for the input (I) to go invalid (X) with respect to the time the t_{LBK} clock reference (K) goes high (H), in this case for clock one (1). Also, t_{LBKHOX} symbolizes local bus timing (LB) for the t_{LBK} clock reference (K) to go high (H), with respect to the output (O) going invalid (X) or output hold time.
2. All timings are in reference to the rising edge of LSYNC_IN.
3. All signals are measured from $OV_{DD}/2$ of the rising edge of LSYNC_IN to $0.4 \times OV_{DD}$ of the signal in question for 3.3 V signaling levels.
4. Input timings are measured at the pin.
5. $t_{LBOTOT1}$ should be used when RCWH[LALE] is not set and when the load on the LALE output pin is at least 10 pF less than the load on the LAD output pins.
6. $t_{LBOTOT2}$ should be used when RCWH[LALE] is set and when the load on the LALE output pin is at least 10 pF less than the load on the LAD output pins.
7. $t_{LBOTOT3}$ should be used when RCWH[LALE] is set and when the load on the LALE output pin equals the load on the LAD output pins.
8. For active/float timing measurements, the Hi-Z or off-state is defined to be when the total current delivered through the component pin is less than or equal to that of the leakage current specification.

Table 35. Local Bus General Timing Parameters—DLL Bypass[9]

Parameter	Symbol[1]	Min	Max	Unit	Notes
Local bus cycle time	t_{LBK}	15	—	ns	2
Input setup to local bus clock	t_{LBIVKH}	7	—	ns	3, 4
Input hold from local bus clock	t_{LBIXKH}	1.0	—	ns	3, 4
LALE output fall to LAD output transition (LATCH hold time)	$t_{LBOTOT1}$	1.5	—	ns	5
LALE output fall to LAD output transition (LATCH hold time)	$t_{LBOTOT2}$	3	—	ns	6
LALE output fall to LAD output transition (LATCH hold time)	$t_{LBOTOT3}$	2.5	—	ns	7
Local bus clock to output valid	t_{LBKLOV}	—	3	ns	3
Local bus clock to output high impedance for LAD/LDP	t_{LBKHOZ}	—	4	ns	8

Notes:

1. The symbols for timing specifications follow the pattern of $t_{\text{(first two letters of functional block)(signal)(state)(reference)(state)}}$ for inputs and $t_{\text{(first two letters of functional block)(reference)(state)(signal)(state)}}$ for outputs. For example, $t_{LBIXKH1}$ symbolizes local bus timing (LB) for the input (I) to go invalid (X) with respect to the time the t_{LBK} clock reference (K) goes high (H), in this case for clock one (1). Also, t_{LBKHOX} symbolizes local bus timing (LB) for the t_{LBK} clock reference (K) to go high (H), with respect to the output (O) going invalid (X) or output hold time.
2. All timings are in reference to the falling edge of LCLK0 (for all outputs and for $\overline{\text{LGTA}}$ and LUPWAIT inputs) or the rising edge of LCLK0 (for all other inputs).
3. All signals are measured from $OV_{DD}/2$ of the rising/falling edge of LCLK0 to $0.4 \times OV_{DD}$ of the signal in question for 3.3 V signaling levels.
4. Input timings are measured at the pin.
5. $t_{LBOTOT1}$ should be used when RCWH[LALE] is set and when the load on the LALE output pin is at least 10 pF less than the load on the LAD output pins.
6. $t_{LBOTOT2}$ should be used when RCWH[LALE] is not set and when the load on the LALE output pin is at least 10 pF less than the load on the LAD output pins.the
7. $t_{LBOTOT3}$ should be used when RCWH[LALE] is not set and when the load on the LALE output pin equals to the load on the LAD output pins.
8. For purposes of active/float timing measurements, the Hi-Z or off-state is defined to be when the total current delivered through the component pin is less than or equal to the leakage current specification.
9. DLL bypass mode is not recommended for use at frequencies above 66 MHz.

Figure 16 provides the AC test load for the local bus.

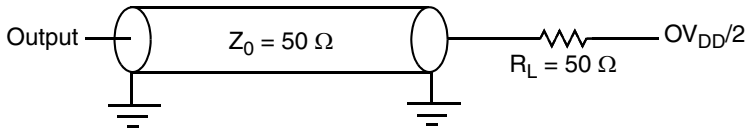

Figure 16. Local Bus C Test Load

Figure 17 through Figure 22 show the local bus signals.

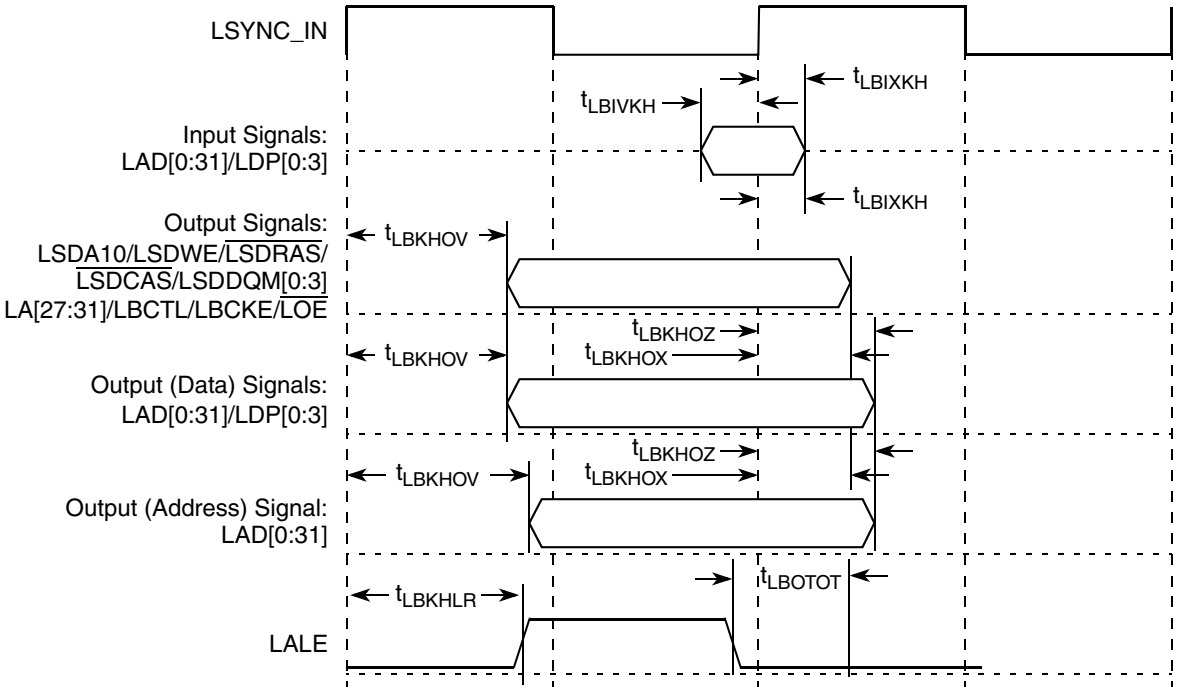

Figure 17. Local Bus Signals, Nonspecial Signals Only (DLL Enabled)

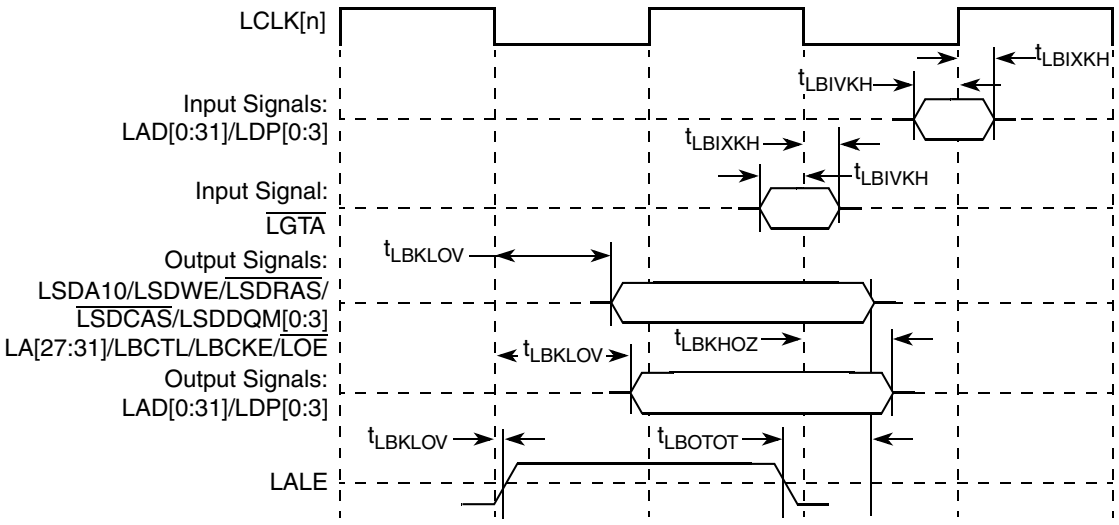

Figure 18. Local Bus Signals, Nonspecial Signals Only (DLL Bypass Mode)

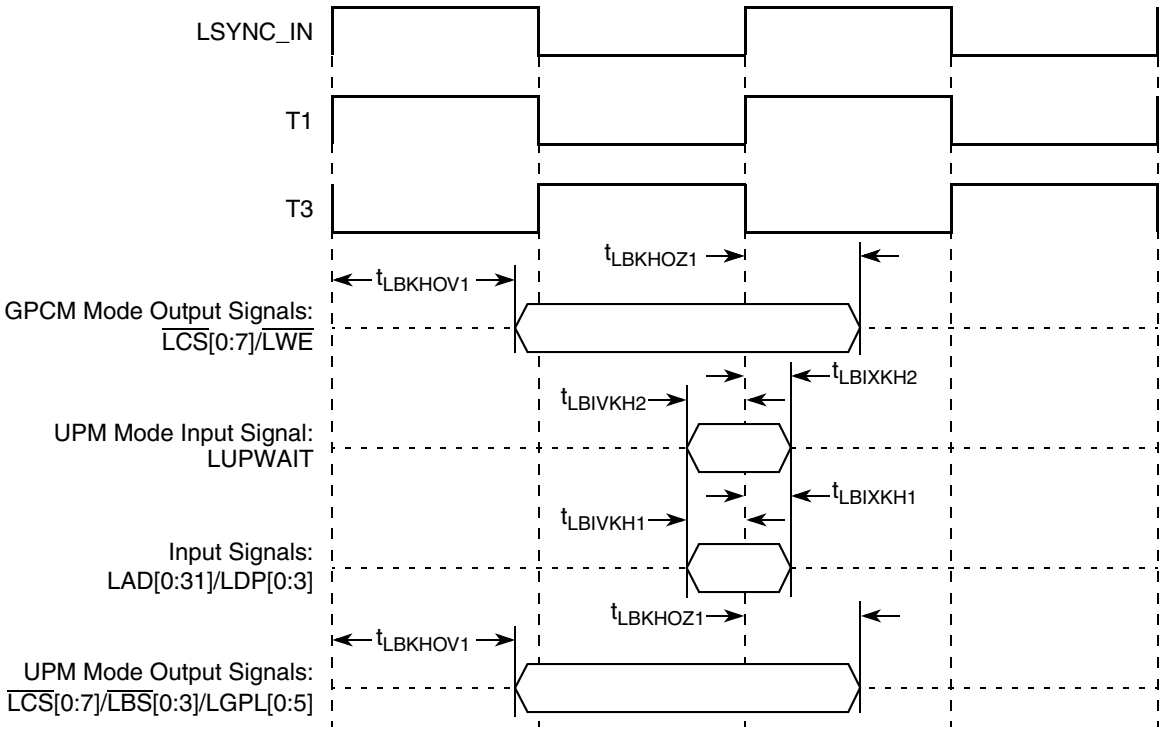

Figure 19. Local Bus Signals, GPCM/UPM Signals for LCCR[CLKDIV] = 2 (DLL Enabled)

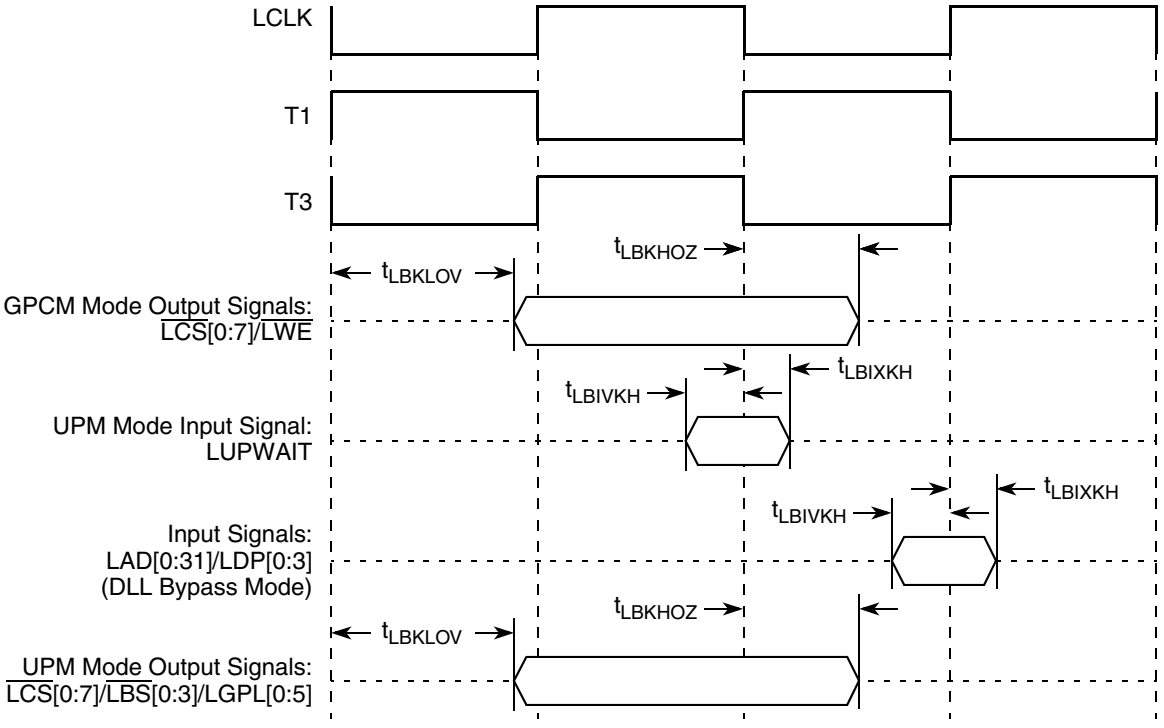

Figure 20. Local Bus Signals, GPCM/UPM Signals for LCCR[CLKDIV] = 2 (DLL Bypass Mode)

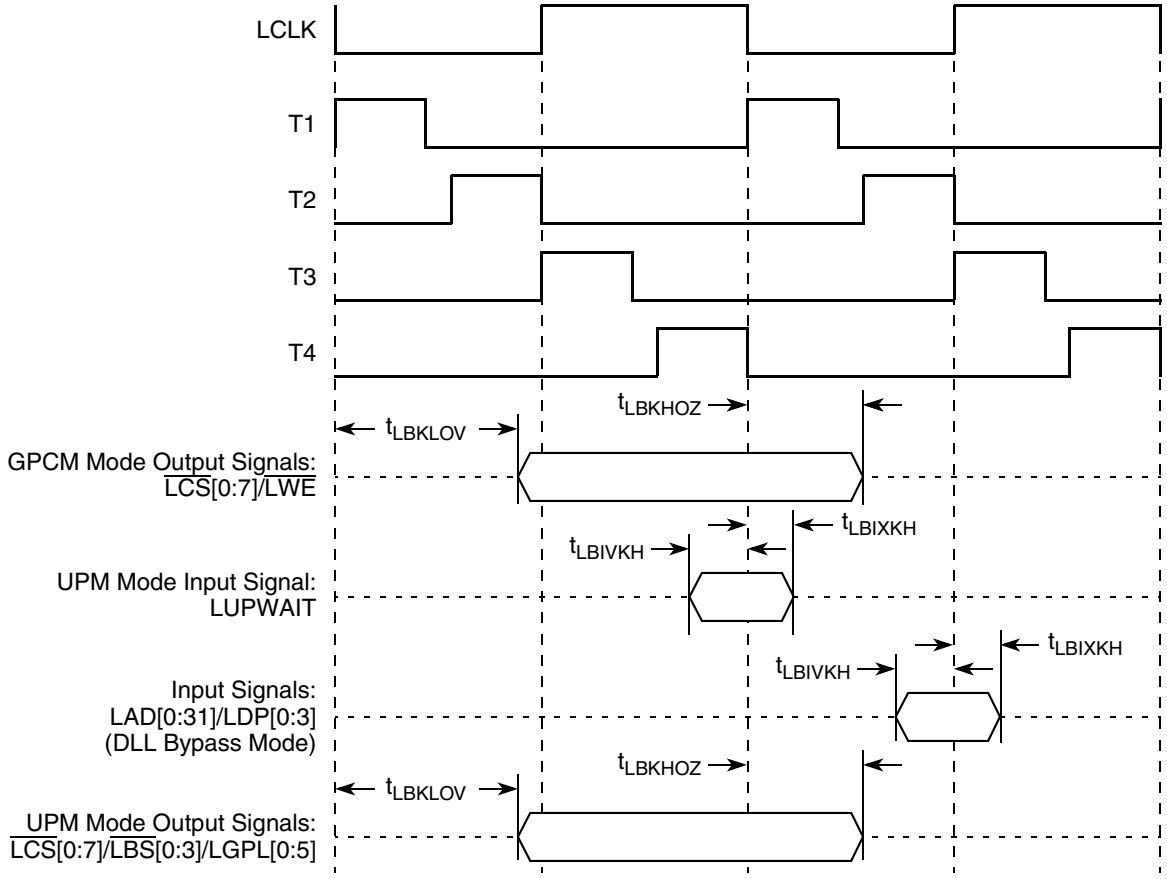

Figure 21. Local Bus Signals, GPCM/UPM Signals for LCCR[CLKDIV] = 4 (DLL Bypass Mode)

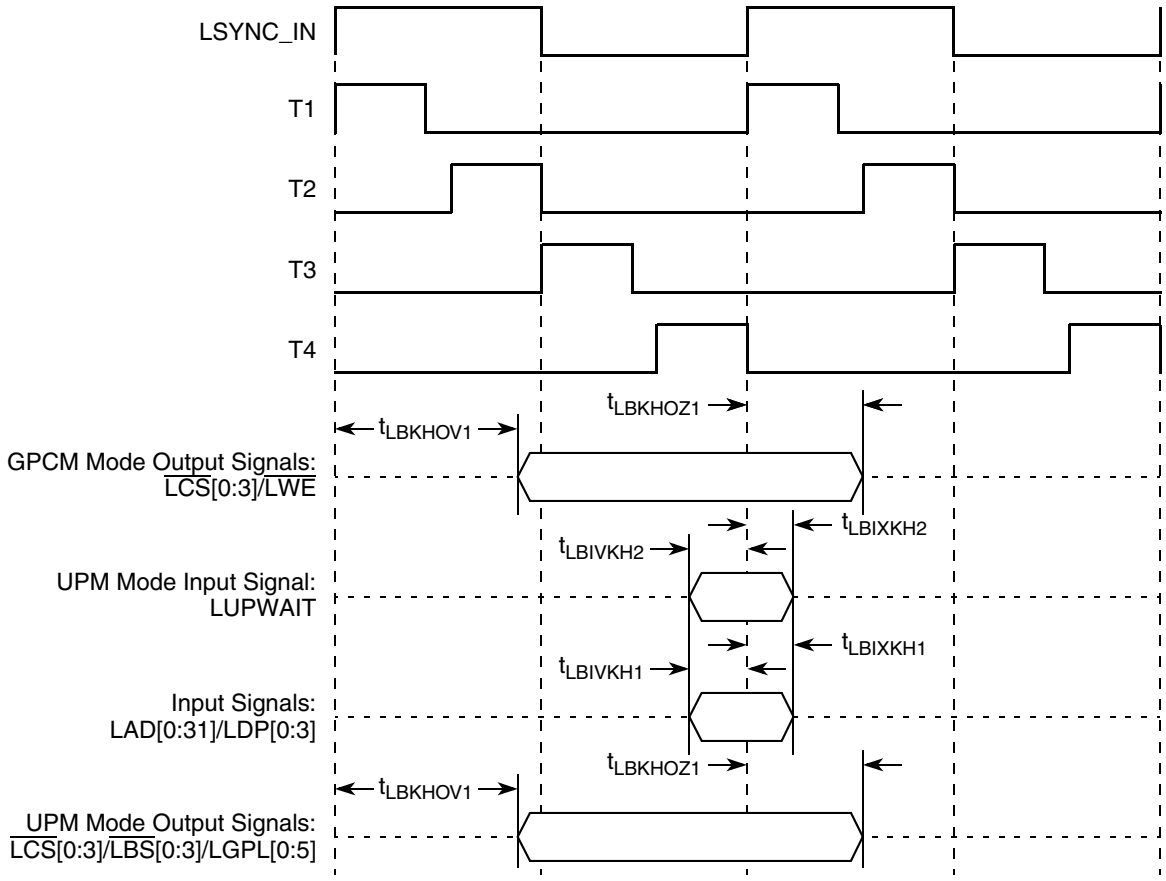

Figure 22. Local Bus Signals, GPCM/UPM Signals for LCCR[CLKDIV] = 4 (DLL Enabled)

11 JTAG

This section describes the DC and AC electrical specifications for the IEEE Std. 1149.1 (JTAG) interface of the MPC8343EA.

11.1 JTAG DC Electrical Characteristics

Table 36 provides the DC electrical characteristics for the IEEE Std. 1149.1 (JTAG) interface of the MPC8343EA.

Table 36. JTAG Interface DC Electrical Characteristics

Parameter	Symbol	Condition	Min	Max	Unit
Input high voltage	V_{IH}	—	OV_{DD} – 0.3	OV_{DD} + 0.3	V
Input low voltage	V_{IL}	—	–0.3	0.8	V
Input current	I_{IN}	—	—	±5	μA
Output high voltage	V_{OH}	I_{OH} = –8.0 mA	2.4	—	V

Table 36. JTAG Interface DC Electrical Characteristics (continued)

Parameter	Symbol	Condition	Min	Max	Unit
Output low voltage	V_{OL}	I_{OL} = 8.0 mA	—	0.5	V
Output low voltage	V_{OL}	I_{OL} = 3.2 mA	—	0.4	V

11.2 JTAG AC Timing Specifications

This section describes the AC electrical specifications for the IEEE Std. 1149.1 (JTAG) interface of the MPC8343EA. Table 37 provides the JTAG AC timing specifications as defined in Figure 24 through Figure 27.

Table 37. JTAG AC Timing Specifications (Independent of CLKIN)[1]

At recommended operating conditions (see Table 2).

Parameter	Symbol[2]	Min	Max	Unit	Notes
JTAG external clock frequency of operation	f_{JTG}	0	33.3	MHz	—
JTAG external clock cycle time	t_{JTG}	30	—	ns	—
JTAG external clock pulse width measured at 1.4 V	t_{JTKHKL}	15	—	ns	—
JTAG external clock rise and fall times	t_{JTGR}, t_{JTGF}	0	2	ns	—
$\overline{\text{TRST}}$ assert time	t_{TRST}	25	—	ns	3
Input setup times: Boundary-scan data TMS, TDI	 t_{JTDVKH} t_{JTIVKH}	 4 4	 — —	ns	4
Input hold times: Boundary-scan data TMS, TDI	 t_{JTDXKH} t_{JTIXKH}	 10 10	 — —	ns	4
Valid times: Boundary-scan data TDO	 t_{JTKLDV} t_{JTKLOV}	 2 2	 11 11	ns	5
Output hold times: Boundary-scan data TDO	 t_{JTKLDX} t_{JTKLOX}	 2 2	 — —	ns	5

Table 37. JTAG AC Timing Specifications (Independent of CLKIN)[1] (continued)

At recommended operating conditions (see Table 2).

Parameter	Symbol[2]	Min	Max	Unit	Notes
JTAG external clock to output high impedance: Boundary-scan data TDO	 t_{JTKLDZ} t_{JTKLOZ}	 2 2	 19 9	ns	5, 6

Notes:

1. All outputs are measured from the midpoint voltage of the falling/rising edge of t_{TCLK} to the midpoint of the signal in question. The output timings are measured at the pins. All output timings assume a purely resistive 50 Ω load (see Figure 14). Time-of-flight delays must be added for trace lengths, vias, and connectors in the system.
2. The symbols for timing specifications follow the pattern of $t_{\text{(first two letters of functional block)(signal)(state)(reference)(state)}}$ for inputs and $t_{\text{(first two letters of functional block)(reference)(state)(signal)(state)}}$ for outputs. For example, t_{JTDVKH} symbolizes JTAG device timing (JT) with respect to the time data input signals (D) reaching the valid state (V) relative to the t_{JTG} clock reference (K) going to the high (H) state or setup time. Also, t_{JTDXKH} symbolizes JTAG timing (JT) with respect to the time data input signals (D) went invalid (X) relative to the t_{JTG} clock reference (K) going to the high (H) state. In general, the clock reference symbol is based on three letters representing the clock of a particular function. For rise and fall times, the latter convention is used with the appropriate letter: R (rise) or F (fall).
3. $\overline{\text{TRST}}$ is an asynchronous level sensitive signal. The setup time is for test purposes only.
4. Non-JTAG signal input timing with respect to t_{TCLK}.
5. Non-JTAG signal output timing with respect to t_{TCLK}.
6. Guaranteed by design and characterization.

Figure 23 provides the AC test load for TDO and the boundary-scan outputs of the MPC8343EA.

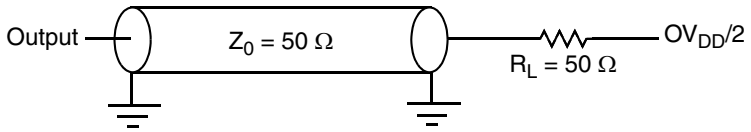

Figure 23. AC Test Load for the JTAG Interface

Figure 24 provides the JTAG clock input timing diagram.

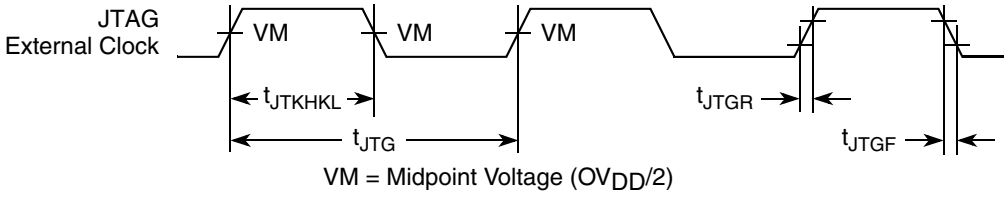

Figure 24. JTAG Clock Input Timing Diagram

Figure 25 provides the $\overline{\text{TRST}}$ timing diagram.

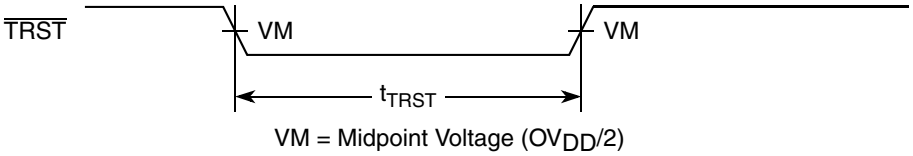

Figure 25. $\overline{\text{TRST}}$ Timing Diagram

Figure 26 provides the boundary-scan timing diagram.

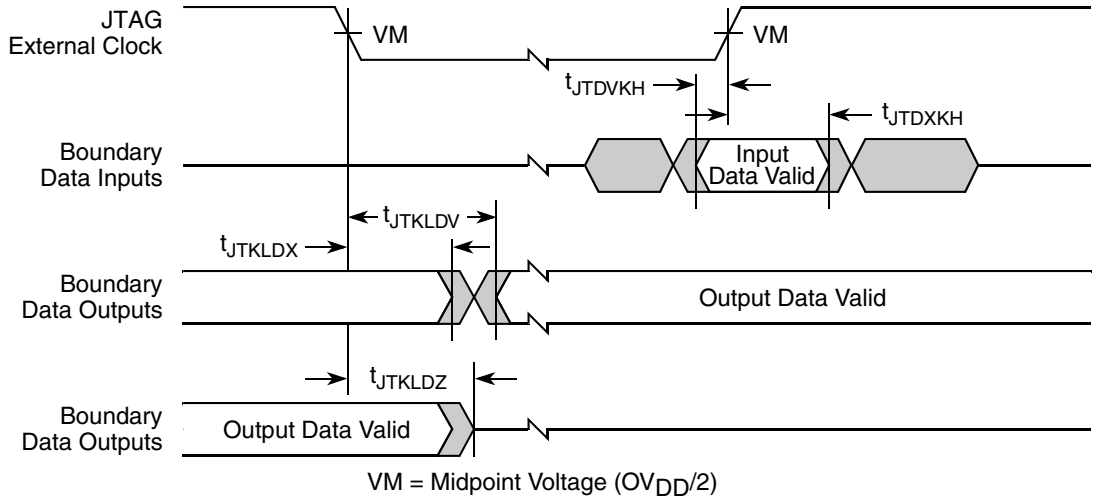

Figure 26. Boundary-Scan Timing Diagram

Figure 27 provides the test access port timing diagram.

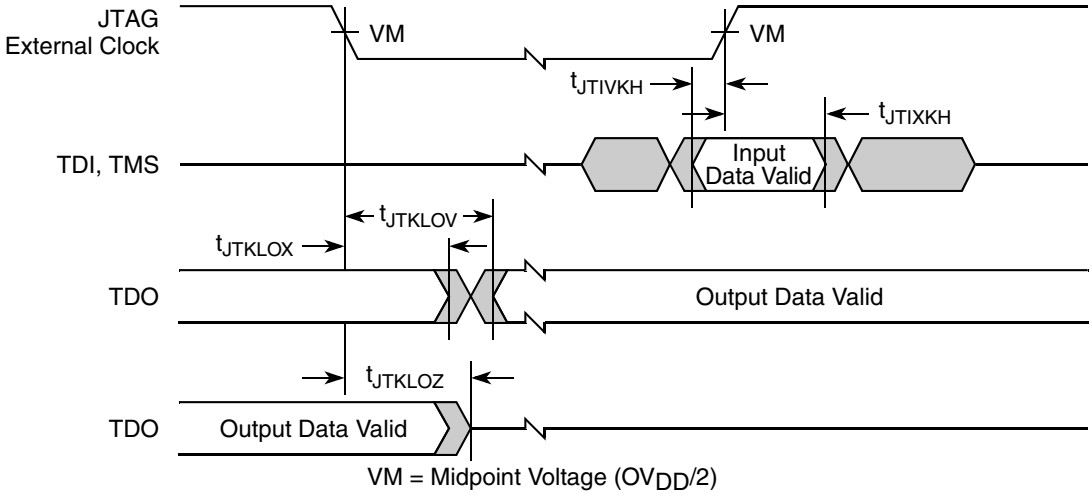

Figure 27. Test Access Port Timing Diagram

12 I²C

This section describes the DC and AC electrical characteristics for the I²C interface of the MPC8343EA.

12.1 I²C DC Electrical Characteristics

Table 38 provides the DC electrical characteristics for the I²C interface of the MPC8343EA.

Table 38. I²C DC Electrical Characteristics

At recommended operating conditions with OV_{DD} of 3.3 V ± 10%.

Parameter	Symbol	Min	Max	Unit	Notes
Input high voltage level	V_{IH}	$0.7 \times OV_{DD}$	$OV_{DD} + 0.3$	V	—
Input low voltage level	V_{IL}	–0.3	$0.3 \times OV_{DD}$	V	—
Low level output voltage	V_{OL}	0	$0.2 \times OV_{DD}$	V	1
Output fall time from V_{IH}(min) to V_{IL}(max) with a bus capacitance from 10 to 400 pF	t_{I2KLKV}	$20 + 0.1 \times C_B$	250	ns	2
Pulse width of spikes which must be suppressed by the input filter	t_{I2KHKL}	0	50	ns	3
Input current each I/O pin (input voltage is between $0.1 \times OV_{DD}$ and $0.9 \times OV_{DD}$(max)	I_I	–10	10	μA	4
Capacitance for each I/O pin	C_I	—	10	pF	—

Notes:
1. Output voltage (open drain or open collector) condition = 3 mA sink current.
2. C_B = capacitance of one bus line in pF.
3. Refer to the *MPC8349EA Integrated Host Processor Family Reference Manual,* for information on the digital filter used.
4. I/O pins obstruct the SDA and SCL lines if OV_{DD} is switched off.

12.2 I²C AC Electrical Specifications

Table 39 provides the AC timing parameters for the I²C interface of the MPC8343EA. Note that all values refer to V_{IH}(min) and V_{IL}(max) levels (see Table 38).

Table 39. I²C AC Electrical Specifications

Parameter	Symbol[1]	Min	Max	Unit
SCL clock frequency	f_{I2C}	0	400	kHz
Low period of the SCL clock	t_{I2CL}	1.3	—	μs
High period of the SCL clock	t_{I2CH}	0.6	—	μs
Setup time for a repeated START condition	t_{I2SVKH}	0.6	—	μs
Hold time (repeated) START condition (after this period, the first clock pulse is generated)	t_{I2SXKL}	0.6	—	μs
Data setup time	t_{I2DVKH}	100	—	ns
Data hold time:CBUS compatible masters I²C bus devices	t_{I2DXKL}	— 0[2]	— 0.9[3]	μs

Table 39. I²C AC Electrical Specifications (continued)

Parameter	Symbol[1]	Min	Max	Unit
Fall time of both SDA and SCL signals[5]	t_{I2CF}	—	300	ns
Setup time for STOP condition	t_{I2PVKH}	0.6	—	μs
Bus free time between a STOP and START condition	t_{I2KHDX}	1.3	—	μs
Noise margin at the LOW level for each connected device (including hysteresis)	V_{NL}	$0.1 \times OV_{DD}$	—	V
Noise margin at the HIGH level for each connected device (including hysteresis)	V_{NH}	$0.2 \times OV_{DD}$	—	V

Notes:

1. The symbols for timing specifications follow the pattern of $t_{\text{(first two letters of functional block)(signal)(state)(reference)(state)}}$ for inputs and $t_{\text{(first two letters of functional block)(reference)(state)(signal)(state)}}$ for outputs. For example, t_{I2DVKH} symbolizes I²C timing (I2) with respect to the time data input signals (D) reach the valid state (V) relative to the t_{I2C} clock reference (K) going to the high (H) state or setup time. Also, t_{I2SXKL} symbolizes I²C timing (I2) for the time that the data with respect to the start condition (S) goes invalid (X) relative to the t_{I2C} clock reference (K) going to the low (L) state or hold time. Also, t_{I2PVKH} symbolizes I²C timing (I2) for the time that the data with respect to the stop condition (P) reaches the valid state (V) relative to the t_{I2C} clock reference (K) going to the high (H) state or setup time. For rise and fall times, the latter convention is used with the appropriate letter: R (rise) or F (fall).
2. The device provides a hold time of at least 300 ns for the SDA signal (referred to the V_{IH}(min) of the SCL signal) to bridge the undefined region of the falling edge of SCL.
3. The maximum t_{I2DVKH} must be met only if the device does not stretch the LOW period (t_{I2CL}) of the SCL signal.
4. C_B = capacitance of one bus line in pF.
5.)The device does not follow the “I2C-BUS Specifications” version 2.1 regarding the t_{I2CF} AC parameter.

Figure 28 provides the AC test load for the I²C.

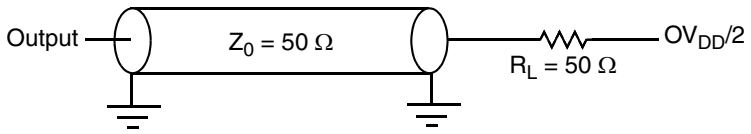

Figure 28. I²C AC Test Load

Figure 29 shows the AC timing diagram for the I²C bus.

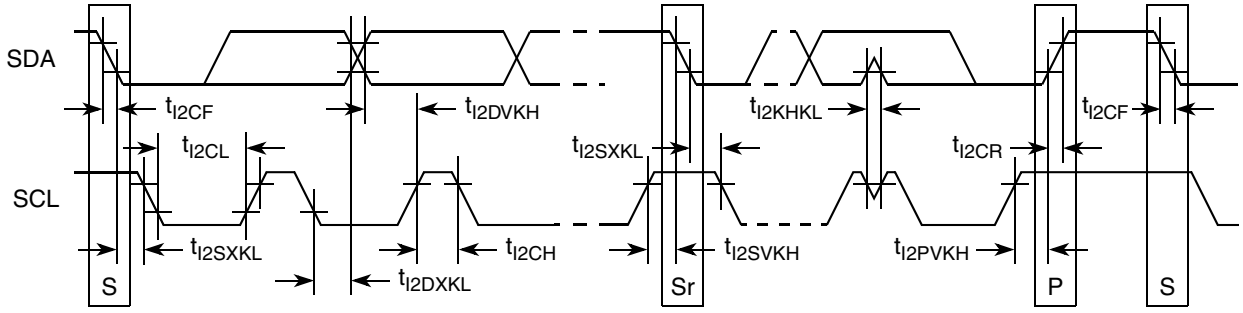

Figure 29. I²C Bus AC Timing Diagram

13 PCI

This section describes the DC and AC electrical specifications for the PCI bus of the MPC8343EA.

13.1 PCI DC Electrical Characteristics

Table 40 provides the DC electrical characteristics for the PCI interface of the MPC8343EA.

Table 40. PCI DC Electrical Characteristics

Parameter	Symbol	Test Condition	Min	Max	Unit
High-level input voltage	V_{IH}	$V_{OUT} \geq V_{OH}$ (min) or	2	OV_{DD} + 0.3	V
Low-level input voltage	V_{IL}	$V_{OUT} \leq V_{OL}$ (max)	–0.3	0.8	V
Input current	I_{IN}	V_{IN}[1]= 0 V or $V_{IN} = OV_{DD}$	—	±5	μA
High-level output voltage	V_{OH}	OV_{DD} = min, I_{OH} = –100 μA	OV_{DD} – 0.2	—	V
Low-level output voltage	V_{OL}	OV_{DD} = min, I_{OL} = 100 μA	—	0.2	V

Note:
1. The symbol V_{IN}, in this case, represents the OV_{IN} symbol referenced in Table 1.

13.2 PCI AC Electrical Specifications

This section describes the general AC timing parameters of the PCI bus of the MPC8343EA. Note that the PCI_CLK or PCI_SYNC_IN signal is used as the PCI input clock depending on whether the device is configured as a host or agent device. Table 41 provides the PCI AC timing specifications at 66 MHz.

Table 41. PCI AC Timing Specifications at 66 MHz[1]

Parameter	Symbol[2]	Min	Max	Unit	Notes
Clock to output valid	t_{PCKHOV}	—	6.0	ns	3
Output hold from clock	t_{PCKHOX}	1	—	ns	3
Clock to output high impedance	t_{PCKHOZ}	—	14	ns	3, 4
Input setup to clock	t_{PCIVKH}	3.0	—	ns	3, 5

Table 41. PCI AC Timing Specifications at 66 MHz[1] (continued)

Parameter	Symbol[2]	Min	Max	Unit	Notes
Input hold from clock	t_{PCIXKH}	0	—	ns	3, 5

Notes:
1. PCI timing depends on M66EN and the ratio between PCI1/PCI2. Refer to the PCI chapter of the reference manual for a description of M66EN.
2. The symbols for timing specifications follow the pattern of $t_{\text{(first two letters of functional block)(signal)(state)(reference)(state)}}$ for inputs and $t_{\text{(first two letters of functional block)(reference)(state)(signal)(state)}}$ for outputs. For example, t_{PCIVKH} symbolizes PCI timing (PC) with respect to the time the input signals (I) reach the valid state (V) relative to the PCI_SYNC_IN clock, t_{SYS}, reference (K) going to the high (H) state or setup time. Also, t_{PCRHFV} symbolizes PCI timing (PC) with respect to the time hard reset (R) went high (H) relative to the frame signal (F) going to the valid (V) state.
3. See the timing measurement conditions in the *PCI 2.3 Local Bus Specifications*.
4. For active/float timing measurements, the Hi-Z or off-state is defined to be when the total current delivered through the component pin is less than or equal to the leakage current specification.
5. Input timings are measured at the pin.

Table 42 provides the PCI AC timing specifications at 33 MHz.

Table 42. PCI AC Timing Specifications at 33 MHz

Parameter	Symbol[1]	Min	Max	Unit	Notes
Clock to output valid	t_{PCKHOV}	—	11	ns	2
Output hold from clock	t_{PCKHOX}	2	—	ns	2
Clock to output high impedance	t_{PCKHOZ}	—	14	ns	2, 3
Input setup to clock	t_{PCIVKH}	3.0	—	ns	2, 4
Input hold from clock	t_{PCIXKH}	0	—	ns	2, 4

Notes:
1. The symbols for timing specifications follow the pattern of $t_{\text{(first two letters of functional block)(signal)(state)(reference)(state)}}$ for inputs and $t_{\text{(first two letters of functional block)(reference)(state)(signal)(state)}}$ for outputs. For example, t_{PCIVKH} symbolizes PCI timing (PC) with respect to the time the input signals (I) reach the valid state (V) relative to the PCI_SYNC_IN clock, t_{SYS}, reference (K) going to the high (H) state or setup time. Also, t_{PCRHFV} symbolizes PCI timing (PC) with respect to the time hard reset (R) went high (H) relative to the frame signal (F) going to the valid (V) state.
2. See the timing measurement conditions in the *PCI 2.3 Local Bus Specifications*.
3. For active/float timing measurements, the Hi-Z or off-state is defined to be when the total current delivered through the component pin is less than or equal to the leakage current specification.
4. Input timings are measured at the pin.

Figure 30 provides the AC test load for PCI.

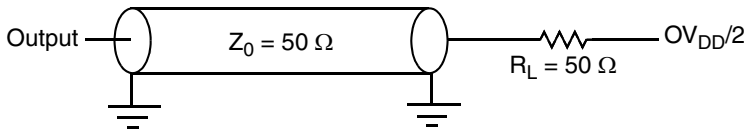

Figure 30. PCI AC Test Load

Figure 31 shows the PCI input AC timing diagram.

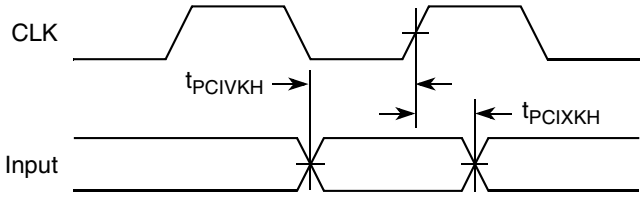

Figure 31. PCI Input AC Timing Diagram

Figure 32 shows the PCI output AC timing diagram.

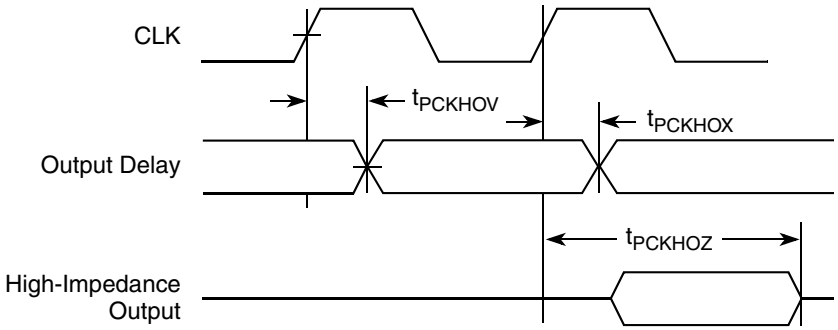

Figure 32. PCI Output AC Timing Diagram

14 Timers

This section describes the DC and AC electrical specifications for the timers.

14.1 Timer DC Electrical Characteristics

Table 43 provides the DC electrical characteristics for the MPC8343EA timer pins, including TIN, $\overline{\text{TOUT}}$, $\overline{\text{TGATE}}$, and RTC_CLK.

Table 43. Timer DC Electrical Characteristics

Parameter	Symbol	Condition	Min	Max	Unit
Input high voltage	V_{IH}	—	2.0	OV_{DD} + 0.3	V
Input low voltage	V_{IL}	—	–0.3	0.8	V
Input current	I_{IN}	—	—	±5	μA
Output high voltage	V_{OH}	I_{OH} = –8.0 mA	2.4	—	V
Output low voltage	V_{OL}	I_{OL} = 8.0 mA	—	0.5	V
Output low voltage	V_{OL}	I_{OL} = 3.2 mA	—	0.4	V

14.2 Timer AC Timing Specifications

Table 44 provides the timer input and output AC timing specifications.

Table 44. Timers Input AC Timing Specifications[1]

Parameter	Symbol[2]	Min	Unit
Timers inputs—minimum pulse width	t_{TIWID}	20	ns

Notes:
1. Input specifications are measured from the 50 percent level of the signal to the 50 percent level of the rising edge of CLKIN. Timings are measured at the pin.
2. Timer inputs and outputs are asynchronous to any visible clock. Timer outputs should be synchronized before use by external synchronous logic. Timer inputs are required to be valid for at least t_{TIWID} ns to ensure proper operation.

15 GPIO

This section describes the DC and AC electrical specifications for the GPIO.

15.1 GPIO DC Electrical Characteristics

Table 45 provides the DC electrical characteristics for the MPC8343EA GPIO.

Table 45. GPIO DC Electrical Characteristics

PArameter	Symbol	Condition	Min	Max	Unit
Input high voltage	V_{IH}	—	2.0	OV_{DD} + 0.3	V
Input low voltage	V_{IL}	—	–0.3	0.8	V
Input current	I_{IN}	—	—	±5	μA
Output high voltage	V_{OH}	I_{OH} = –8.0 mA	2.4	—	V
Output low voltage	V_{OL}	I_{OL} = 8.0 mA	—	0.5	V
Output low voltage	V_{OL}	I_{OL} = 3.2 mA	—	0.4	V

15.2 GPIO AC Timing Specifications

Table 46 provides the GPIO input and output AC timing specifications.

Table 46. GPIO Input AC Timing Specifications[1]

Parameter	Symbol[2]	Min	Unit
GPIO inputs—minimum pulse width	t_{PIWID}	20	ns

Notes:
1. Input specifications are measured from the 50 percent level of the signal to the 50 percent level of the rising edge of CLKIN. Timings are measured at the pin.
2. GPIO inputs and outputs are asynchronous to any visible clock. GPIO outputs should be synchronized before use by external synchronous logic. GPIO inputs must be valid for at least t_{PIWID} ns to ensure proper operation.

16 IPIC

This section describes the DC and AC electrical specifications for the external interrupt pins.

16.1 IPIC DC Electrical Characteristics

Table 47 provides the DC electrical characteristics for the external interrupt pins.

Table 47. IPIC DC Electrical Characteristics[1]

Parameter	Symbol	Condition	Min	Max	Unit	Notes
Input high voltage	V_{IH}	—	2.0	OV_{DD} + 0.3	V	—
Input low voltage	V_{IL}	—	–0.3	0.8	V	—
Input current	I_{IN}	—	—	±5	μA	—
Output low voltage	V_{OL}	I_{OL} = 8.0 mA	—	0.5	V	2
Output low voltage	V_{OL}	I_{OL} = 3.2 mA	—	0.4	V	2

Notes:
1. This table applies for pins $\overline{\text{IRQ}}$[0:7], $\overline{\text{IRQ_OUT}}$, and $\overline{\text{MCP_OUT}}$.
2. $\overline{\text{IRQ_OUT}}$ and $\overline{\text{MCP_OUT}}$ are open-drain pins; thus V_{OH} is not relevant for those pins.

16.2 IPIC AC Timing Specifications

Table 48 provides the IPIC input and output AC timing specifications.

Table 48. IPIC Input AC Timing Specifications[1]

Parameter	Symbol[2]	Min	Unit
IPIC inputs—minimum pulse width	t_{PICWID}	20	ns

Notes:
1. Input specifications are measured at the 50 percent level of the IPIC input signals. Timings are measured at the pin.
2. IPIC inputs and outputs are asynchronous to any visible clock. IPIC outputs should be synchronized before use by external synchronous logic. IPIC inputs must be valid for at least t_{PICWID} ns to ensure proper operation in edge triggered mode.

17 SPI

This section describes the SPI DC and AC electrical specifications.

17.1 SPI DC Electrical Characteristics

Table 49 provides the SPI DC electrical characteristics.

Table 49. SPI DC Electrical Characteristics

Parameter	Symbol	Condition	Min	Max	Unit
Input high voltage	V_{IH}	—	2.0	OV_{DD} + 0.3	V
Input low voltage	V_{IL}	—	–0.3	0.8	V

Table 49. SPI DC Electrical Characteristics (continued)

Parameter	Symbol	Condition	Min	Max	Unit
Input current	I_{IN}	—	—	±5	μA
Output high voltage	V_{OH}	I_{OH} = –8.0 mA	2.4	—	V
Output low voltage	V_{OL}	I_{OL} = 8.0 mA	—	0.5	V
Output low voltage	V_{OL}	I_{OL} = 3.2 mA	—	0.4	V

17.2 SPI AC Timing Specifications

Table 50 provides the SPI input and output AC timing specifications.

Table 50. SPI AC Timing Specifications[1]

Parameter	Symbol[2]	Min	Max	Unit
SPI outputs valid—Master mode (internal clock) delay	t_{NIKHOV}	—	6	ns
SPI outputs hold—Master mode (internal clock) delay	t_{NIKHOX}	0.5	—	ns
SPI outputs valid—Slave mode (external clock) delay	t_{NEKHOV}	—	8	ns
SPI outputs hold—Slave mode (external clock) delay	t_{NEKHOX}	2	—	ns
SPI inputs—Master mode (internal clock input setup time	t_{NIIVKH}	4	—	ns
SPI inputs—Master mode (internal clock input hold time	t_{NIIXKH}	0	—	ns
SPI inputs—Slave mode (external clock) input setup time	t_{NEIVKH}	4	—	ns
SPI inputs—Slave mode (external clock) input hold time	t_{NEIXKH}	2	—	ns

Notes:
1. Output specifications are measured from the 50 percent level of the rising edge of CLKIN to the 50 percent level of the signal. Timings are measured at the pin.
2. The symbols for timing specifications follow the pattern of $t_{\text{(first two letters of functional block)(signal)(state)(reference)(state)}}$ for inputs and $t_{\text{(first two letters of functional block)(reference)(state)(signal)(state)}}$ for outputs. For example, t_{NIKHOX} symbolizes the internal timing (NI) for the time SPICLK clock reference (K) goes to the high state (H) until outputs (O) are invalid (X).

Figure 33 provides the AC test load for the SPI.

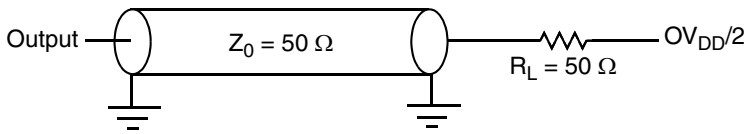

Figure 33. SPI AC Test Load

Figure 34 and Figure 35 represent the AC timings from Table 50. Note that although the specifications generally reference the rising edge of the clock, these AC timing diagrams also apply when the falling edge is the active edge.

Figure 34 shows the SPI timings in slave mode (external clock).

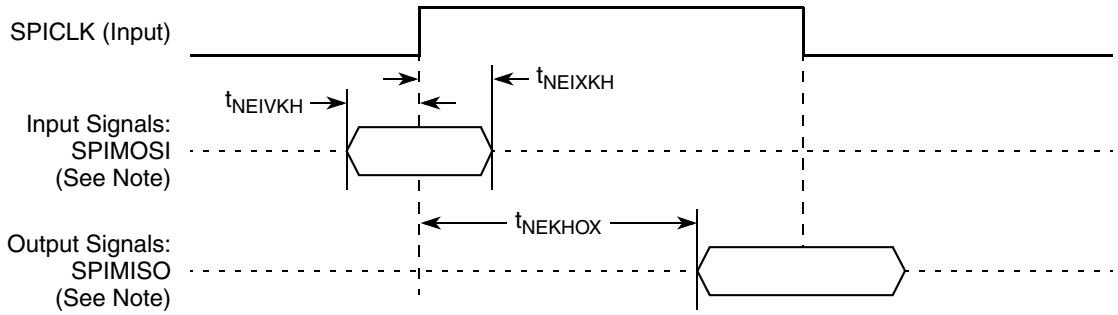

Note: The clock edge is selectable on SPI.

Figure 34. SPI AC Timing in Slave Mode (External Clock) Diagram

Figure 35 shows the SPI timings in master mode (internal clock).

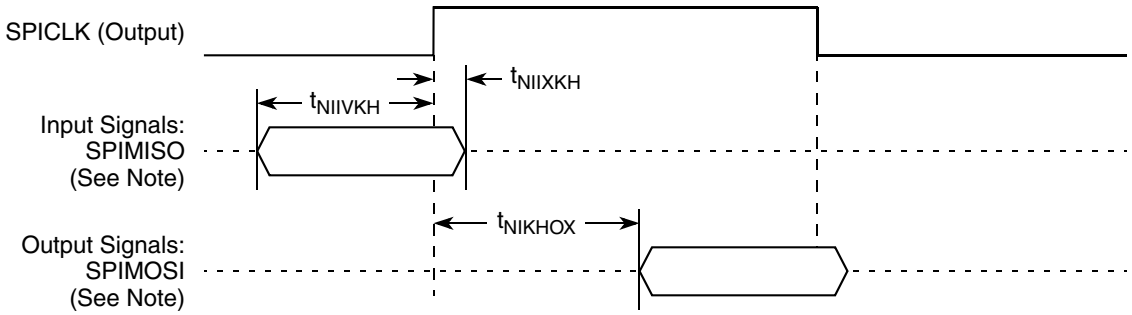

Note: The clock edge is selectable on SPI.

Figure 35. SPI AC Timing in Master Mode (Internal Clock) Diagram

18 Package and Pin Listings

This section details package parameters, pin assignments, and dimensions. The MPC8343EA is available in a plastic ball grid array (PBGA). See Section 18.1, "Package Parameters for the MPC8343EA PBGA," and Section 18.2, "Mechanical Dimensions for the MPC8343EA PBGA."

18.1 Package Parameters for the MPC8343EA PBGA

The package parameters are as provided in the following list. The package type is 29 mm × 29 mm, 620 plastic ball grid array (PBGA).

Package outline	29 mm × 29 mm
Interconnects	620
Pitch	1.00 mm
Module height (maximum)	2.46 mm

Module height (typical)	2.23 mm
Module height (minimum)	2.00 mm
Solder balls	62 Sn/36 Pb/2 Ag (ZQ package) 96.5 Sn/3.5Ag (VR package)
Ball diameter (typical)	0.60 mm

18.2 Mechanical Dimensions for the MPC8343EA PBGA

Figure 36 shows the mechanical dimensions and bottom surface nomenclature for the MPC8343EA, 620-PBGA package.

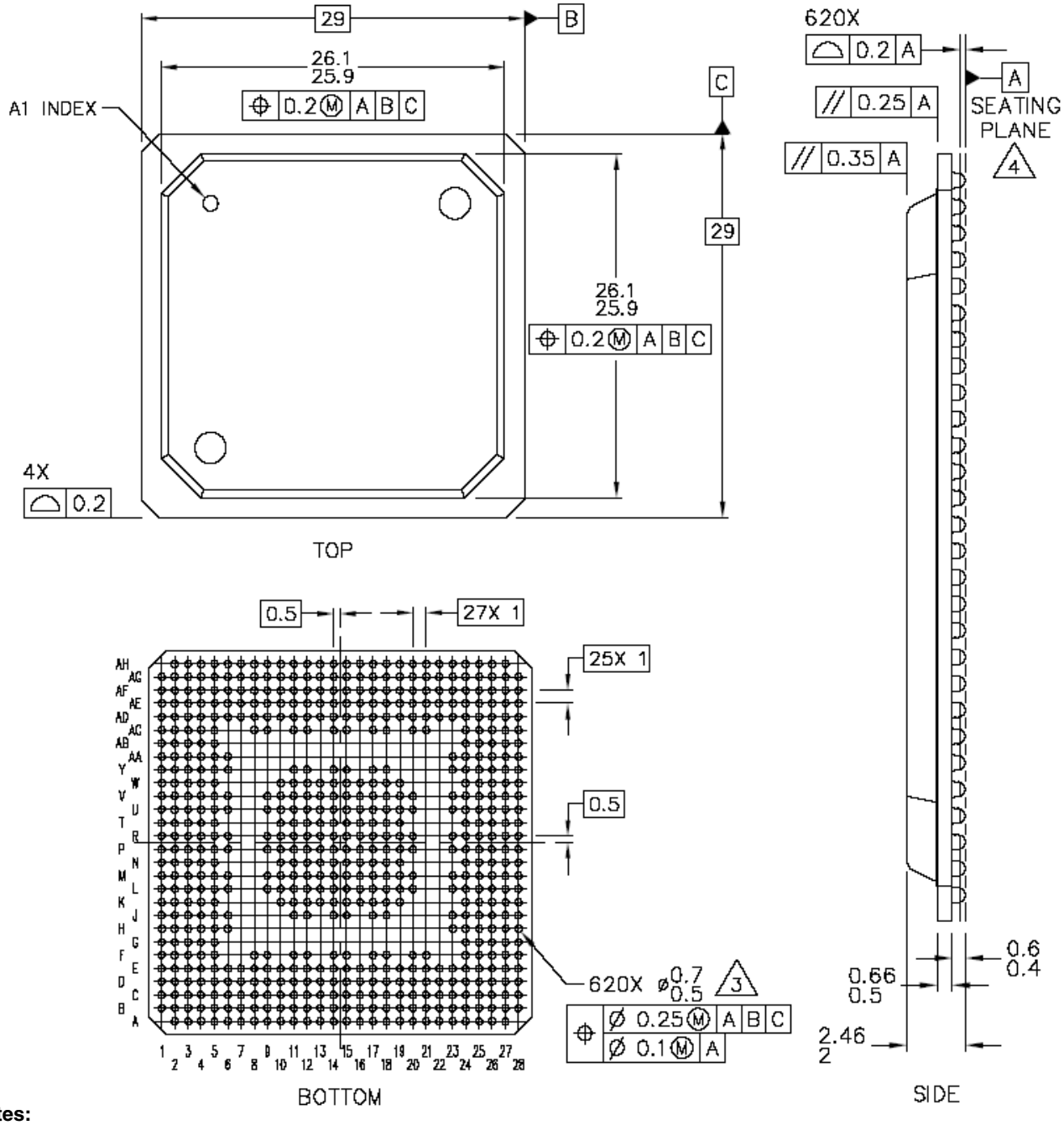

Notes:

1. All dimensions are in millimeters.
2. Dimensioning and tolerancing per ASME Y14. 5M-1994.
3. Maximum solder ball diameter measured parallel to datum A.
4. Datum A, the seating plane, is determined by the spherical crowns of the solder balls.

Figure 36. Mechanical Dimensions and Bottom Surface Nomenclature for the MPC8343EA PBGA

18.3 Pinout Listings

Table 51 provides the pin-out listing for the MPC8343EA, 620-PBGA package.

Table 51. MPC8343EA (PBGA) Pinout Listing

Signal	Package Pin Number	Pin Type	Power Supply	Notes
PCI				
PCI1_INTA/IRQ_OUT	D20	O	OV_{DD}	2
PCI1_RESET_OUT	B21	O	OV_{DD}	—
PCI1_AD[31:0]	E19, D17, A16, A18, B17, B16, D16, B18, E17, E16, A15, C16, D15, D14, C14, A12, D12, B11, C11, E12, A10, C10, A9, E11, E10, B9, B8, D9, A8, C9, D8, C8	I/O	OV_{DD}	—
PCI1_C/BE[3:0]	A17, A14, A11, B10	I/O	OV_{DD}	—
PCI1_PAR	D13	I/O	OV_{DD}	—
PCI1_FRAME	B14	I/O	OV_{DD}	5
PCI1_TRDY	A13	I/O	OV_{DD}	5
PCI1_IRDY	E13	I/O	OV_{DD}	5
PCI1_STOP	C13	I/O	OV_{DD}	5
PCI1_DEVSEL	B13	I/O	OV_{DD}	5
PCI1_IDSEL	C17	I	OV_{DD}	—
PCI1_SERR	C12	I/O	OV_{DD}	5
PCI1_PERR	B12	I/O	OV_{DD}	5
PCI1_REQ[0]	A21	I/O	OV_{DD}	—
PCI1_REQ[1]/CPCI1_HS_ES	C19	I	OV_{DD}	—
PCI1_REQ[2:4]	C18, A19, E20	I	OV_{DD}	—
PCI1_GNT0	B20	I/O	OV_{DD}	—
PCI1_GNT1/CPCI1_HS_LED	C20	O	OV_{DD}	—
PCI1_GNT2/CPCI1_HS_ENUM	B19	O	OV_{DD}	—
PCI1_GNT[3:4]	A20, E18	O	OV_{DD}	—
M66EN	L26	I	OV_{DD}	—
DDR SDRAM Memory Interface				
MDQ[0:31]	AC25, AD27, AD25, AH27, AE28, AD26, AD24, AF27, AF25, AF28, AH24, AG26, AE25, AG25, AH26, AH25, AG22, AH22, AE21, AD19, AE22, AF23, AE19, AG20, AG19, AD17, AE16, AF16, AF18, AG18, AH17, AH16	I/O	GV_{DD}	—

Table 51. MPC8343EA (PBGA) Pinout Listing (continued)

Signal	Package Pin Number	Pin Type	Power Supply	Notes
MECC[0:4]/MSRCID[0:4]	AG13, AE14, AH12, AH10, AE15	I/O	GV_{DD}	—
MECC[5]/MDVAL	AH14	I/O	GV_{DD}	—
MECC[6:7]	AE13, AH11	I/O	GV_{DD}	—
MDM[0:3]	AG28, AG24, AF20, AG17	O	GV_{DD}	—
MDM[8]	AG12	O	GV_{DD}	—
MDQS[0:3]	AE27, AE26, AE20, AH18	I/O	GV_{DD}	—
MDQS[8]	AH13	I/O	GV_{DD}	—
MBA[0:1]	AF10, AF11	O	GV_{DD}	—
MA[0:14]	AF13, AF15, AG16, AD16, AF17, AH20, AH19, AH21, AD18, AG21, AD13, AF21, AF22, AE1, AA5	O	GV_{DD}	—
$\overline{\text{MWE}}$	AD10	O	GV_{DD}	—
$\overline{\text{MRAS}}$	AF7	O	GV_{DD}	—
$\overline{\text{MCAS}}$	AG6	O	GV_{DD}	—
$\overline{\text{MCS}}$[0:3]	AE7, AH7, AH4, AF2	O	GV_{DD}	—
MCKE[0:1]	AG23, AH23	O	GV_{DD}	3
MCK[0:3]	AH15, AE24, AE2, AF14	O	GV_{DD}	—
$\overline{\text{MCK}}$[0:3]	AG15, AD23, AE3, AG14	O	GV_{DD}	—
MODT[0:3]	AG5, AD4, AH6, AF4	O	GV_{DD}	—
MBA[2]	AD22	O	GV_{DD}	—
MDIC0	AG11	I/O	—	9
MDIC1	AF12	I/O	—	9
Local Bus Controller Interface				
LAD[0:31]	T4, T5, T1, R2, R3, T2, R1, R4, P1, P2, P3, P4, N1, N4, N2, N3, M1, M2, M3, N5, M4, L1, L2, L3, K1, M5, K2, K3, J1, J2, L5, J3	I/O	OV_{DD}	—
LDP[0]/$\overline{\text{CKSTOP_OUT}}$	H1	I/O	OV_{DD}	—
LDP[1]/$\overline{\text{CKSTOP_IN}}$	K5	I/O	OV_{DD}	—
LDP[2]/$\overline{\text{LCS}}$[4]	H2	I/O	OV_{DD}	—
LDP[3]/$\overline{\text{LCS}}$[5]	G1	I/O	OV_{DD}	—
LA[27:31]	J4, H3, G2, F1, G3	O	OV_{DD}	—
$\overline{\text{LCS}}$[0:3]	J5, H4, F2, E1	O	OV_{DD}	—
$\overline{\text{LWE}}$[0:3]/LSDDQM[0:3]/$\overline{\text{LBS}}$[0:3]	F3, G4, D1, E2	O	OV_{DD}	—

Table 51. MPC8343EA (PBGA) Pinout Listing (continued)

Signal	Package Pin Number	Pin Type	Power Supply	Notes
LBCTL	H5	O	OV_{DD}	—
LALE	E3	O	OV_{DD}	—
LGPL0/LSDA10/cfg_reset_source0	F4	I/O	OV_{DD}	—
LGPL1/$\overline{\text{LSDWE}}$/cfg_reset_source1	D2	I/O	OV_{DD}	—
LGPL2/$\overline{\text{LSDRAS}}$/$\overline{\text{LOE}}$	C1	O	OV_{DD}	—
LGPL3/$\overline{\text{LSDCAS}}$/cfg_reset_source2	C2	I/O	OV_{DD}	—
LGPL4/$\overline{\text{LGTA}}$/LUPWAIT/LPBSE	C3	I/O	OV_{DD}	12
LGPL5/cfg_clkin_div	B3	I/O	OV_{DD}	—
LCKE	E4	O	OV_{DD}	—
LCLK[0:2]	D4, A3, C4	O	OV_{DD}	—
LSYNC_OUT	U3	O	OV_{DD}	—
LSYNC_IN	Y2	I	OV_{DD}	—
General Purpose I/O Timers				
GPIO1[0]/$\overline{\text{DMA_DREQ0}}$/GTM1_TIN1/ GTM2_TIN2	D27	I/O	OV_{DD}	—
GPIO1[1]/$\overline{\text{DMA_DACK0}}$/$\overline{\text{GTM1_TGATE1}}$/ $\overline{\text{GTM2_TGATE2}}$	E26	I/O	OV_{DD}	—
GPIO1[2]/$\overline{\text{DMA_DDONE0}}$/ $\overline{\text{GTM1_TOUT1}}$	D28	I/O	OV_{DD}	—
GPIO1[3]/$\overline{\text{DMA_DREQ1}}$/GTM1_TIN2/ GTM2_TIN1	G25	I/O	OV_{DD}	—
GPIO1[4]/$\overline{\text{DMA_DACK1}}$/ $\overline{\text{GTM1_TGATE2}}$/$\overline{\text{GTM2_TGATE1}}$	J24	I/O	OV_{DD}	—
GPIO1[5]/$\overline{\text{DMA_DDONE1}}$/ $\overline{\text{GTM1_TOUT2}}$/$\overline{\text{GTM2_TOUT1}}$	F26	I/O	OV_{DD}	—
GPIO1[6]/$\overline{\text{DMA_DREQ2}}$/GTM1_TIN3/ GTM2_TIN4	E27	I/O	OV_{DD}	—
GPIO1[7]/$\overline{\text{DMA_DACK2}}$/$\overline{\text{GTM1_TGATE3}}$/ $\overline{\text{GTM2_TGATE4}}$	E28	I/O	OV_{DD}	—
GPIO1[8]/$\overline{\text{DMA_DDONE2}}$/ $\overline{\text{GTM1_TOUT3}}$	H25	I/O	OV_{DD}	—
GPIO1[9]/$\overline{\text{DMA_DREQ3}}$/GTM1_TIN4/ GTM2_TIN3	F27	I/O	OV_{DD}	—
GPIO1[10]/$\overline{\text{DMA_DACK3}}$/ $\overline{\text{GTM1_TGATE4}}$/$\overline{\text{GTM2_TGATE3}}$	K24	I/O	OV_{DD}	—
GPIO1[11]/$\overline{\text{DMA_DDONE3}}$/ $\overline{\text{GTM1_TOUT4}}$/$\overline{\text{GTM2_TOUT3}}$	G26	I/O	OV_{DD}	—

Table 51. MPC8343EA (PBGA) Pinout Listing (continued)

Signal	Package Pin Number	Pin Type	Power Supply	Notes
USB				
DR_D0_ENABLEN	C28	I/O	OV_{DD}	—
DR_D1_SER_TXD	F25	I/O	OV_{DD}	—
DR_D2_VMO_SE0	B28	I/O	OV_{DD}	—
DR_D3_SPEED	C27	I/O	OV_{DD}	—
DR_D4_DP	D26	I/O	OV_{DD}	—
DR_D5_DM	E25	I/O	OV_{DD}	—
DR_D6_SER_RCV	C26	I/O	OV_{DD}	—
DR_D7_DRVVBUS	D25	I/O	OV_{DD}	—
DR_SESS_VLD_NXT	B26	I	OV_{DD}	—
DR_XCVR_SEL_DPPULLUP	E24	I/O	OV_{DD}	—
DR_STP_SUSPEND	A27	O	OV_{DD}	—
DR_RX_ERROR_PWRFAULT	C25	I	OV_{DD}	—
DR_TX_VALID_PCTL0	A26	O	OV_{DD}	—
DR_TX_VALIDH_PCTL1	B25	O	OV_{DD}	—
DR_CLK	A25	I	OV_{DD}	—
Programmable Interrupt Controller				
$\overline{\text{MCP_OUT}}$	E8	O	OV_{DD}	2
$\overline{\text{IRQ}}$0/$\overline{\text{MCP_IN}}$/GPIO2[12]	J28	I/O	OV_{DD}	—
$\overline{\text{IRQ}}$[1:5]/GPIO2[13:17]	K25, J25, H26, L24, G27	I/O	OV_{DD}	—
$\overline{\text{IRQ}}$[6]/GPIO2[18]/CKSTOP_OUT	G28	I/O	OV_{DD}	—
$\overline{\text{IRQ}}$[7]/GPIO2[19]/CKSTOP_IN	J26	I/O	OV_{DD}	—
Ethernet Management Interface				
EC_MDC	Y24	O	LV_{DD1}	—
EC_MDIO	Y25	I/O	LV_{DD1}	11
Gigabit Reference Clock				
EC_GTX_CLK125	Y26	I	LV_{DD1}	—
Three-Speed Ethernet Controller (Gigabit Ethernet 1)				
TSEC1_COL/GPIO2[20]	M26	I/O	OV_{DD}	—
TSEC1_CRS/GPIO2[21]	U25	I/O	LV_{DD1}	—
TSEC1_GTX_CLK	V24	O	LV_{DD1}	3
TSEC1_RX_CLK	U26	I	LV_{DD1}	—

Table 51. MPC8343EA (PBGA) Pinout Listing (continued)

Signal	Package Pin Number	Pin Type	Power Supply	Notes
TSEC1_RX_DV	U24	I	LV_{DD1}	—
TSEC1_RX_ER/GPIO2[26]	L28	I/O	OV_{DD}	—
TSEC1_RXD[3:0]	W26, W24, Y28, Y27	I	LV_{DD1}	—
TSEC1_TX_CLK	N25	I	OV_{DD}	—
TSEC1_TXD[3:0]	V28, V27, V26, W28	O	LV_{DD1}	10
TSEC1_TX_EN	W27	O	LV_{DD1}	—
TSEC1_TX_ER/GPIO2[31]	N24	I/O	OV_{DD}	—
Three-Speed Ethernet Controller (Gigabit Ethernet 2)				
TSEC2_COL/GPIO1[21]	P28	I/O	OV_{DD}	—
TSEC2_CRS/GPIO1[22]	AC28	I/O	LV_{DD2}	—
TSEC2_GTX_CLK	AC27	O	LV_{DD2}	—
TSEC2_RX_CLK	AB25	I	LV_{DD2}	—
TSEC2_RX_DV/GPIO1[23]	AC26	I/O	LV_{DD2}	—
TSEC2_RXD[3:0]/GPIO1[13:16]	AA25, AA26, AA27, AA28	I/O	LV_{DD2}	—
TSEC2_RX_ER/GPIO1[25]	R25	I/O	OV_{DD}	—
TSEC2_TXD[3:0]/GPIO1[17:20]	AB26, AB27, AA24, AB28	I/O	LV_{DD2}	—
TSEC2_TX_ER/GPIO1[24]	R27	I/O	OV_{DD}	—
TSEC2_TX_EN/GPIO1[12]	AD28	I/O	LV_{DD2}	3
TSEC2_TX_CLK/GPIO1[30]	R26	I/O	OV_{DD}	—
DUART				
UART_SOUT[1:2]/MSRCID[0:1]/ LSRCID[0:1]	B4, A4	O	OV_{DD}	—
UART_SIN[1:2]/MSRCID[2:3]/ LSRCID[2:3]	D5, C5	I/O	OV_{DD}	—
$\overline{\text{UART_CTS}}$[1]/MSRCID4/LSRCID4	B5	I/O	OV_{DD}	—
$\overline{\text{UART_CTS}}$[2]/MDVAL/LDVAL	A5	I/O	OV_{DD}	—
$\overline{\text{UART_RTS}}$[1:2]	D6, C6	O	OV_{DD}	—
I^2C interface				
IIC1_SDA	E5	I/O	OV_{DD}	2
IIC1_SCL	A6	I/O	OV_{DD}	2
IIC2_SDA	B6	I/O	OV_{DD}	2
IIC2_SCL	E7	I/O	OV_{DD}	2

Table 51. MPC8343EA (PBGA) Pinout Listing (continued)

Signal	Package Pin Number	Pin Type	Power Supply	Notes
SPI				
SPIMOSI/$\overline{\text{LCS}}$[6]	D7	I/O	OV_{DD}	—
SPIMISO/$\overline{\text{LCS}}$[7]	C7	I/O	OV_{DD}	—
SPICLK	B7	I/O	OV_{DD}	—
SPISEL	A7	I	OV_{DD}	—
Clocks				
PCI_CLK_OUT[0:2]	Y1, W3, W2	O	OV_{DD}	—
PCI_CLK_OUT[3]/$\overline{\text{LCS}}$[6]	W1	O	OV_{DD}	—
PCI_CLK_OUT[4]/$\overline{\text{LCS}}$[7]	V3	O	OV_{DD}	—
PCI_SYNC_IN/PCI_CLOCK	U4	I	OV_{DD}	—
PCI_SYNC_OUT	U5	O	OV_{DD}	3
RTC/PIT_CLOCK	E9	I	OV_{DD}	—
CLKIN	W5	I	OV_{DD}	—
JTAG				
TCK	H27	I	OV_{DD}	—
TDI	H28	I	OV_{DD}	4
TDO	M24	O	OV_{DD}	3
TMS	J27	I	OV_{DD}	4
$\overline{\text{TRST}}$	K26	I	OV_{DD}	4
Test				
TEST	F28	I	OV_{DD}	6
TEST_SEL	T3	I	OV_{DD}	7
PMC				
$\overline{\text{QUIESCE}}$	K27	O	OV_{DD}	—
System Control				
$\overline{\text{PORESET}}$	K28	I	OV_{DD}	—
$\overline{\text{HRESET}}$	M25	I/O	OV_{DD}	1
$\overline{\text{SRESET}}$	L27	I/O	OV_{DD}	2
Thermal Management				
THERM0	B15	I	—	8

Table 51. MPC8343EA (PBGA) Pinout Listing (continued)

Signal	Package Pin Number	Pin Type	Power Supply	Notes
Power and Ground Signals				
$AV_{DD}1$	C15	Power for e300 PLL (1.2 V)	$AV_{DD}1$	—
$AV_{DD}2$	U1	Power for system PLL (1.2 V)	$AV_{DD}2$	—
$AV_{DD}3$	AF9	Power for DDR DLL (1.2 V)	—	—
$AV_{DD}4$	U2	Power for LBIU DLL (1.2 V)	$AV_{DD}4$	—
GND	A2, B1, B2, D10, D18, E6, E14, E22, F9, F12, F15, F18, F21, F24, G5, H6, J23, L4, L6, L12, L13, L14, L15, L16, L17, M11, M12, M13, M14, M15, M16, M17, M18, M23, N11, N12, N13, N14, N15, N16, N17, N18, P6, P11, P12, P13, P14, P15, P16, P17, P18, P24, R5, R23, R11, R12, R13, R14, R15, R16, R17, R18, T11, T12, T13, T14, T15, T16, T17, T18, U6, U11, U12, U13, U14, U15, U16, U17, U18, V12, V13, V14, V15, V16, V17, V23, V25, W4, Y6, AA23, AB24, AC5, AC8, AC11, AC14, AC17, AC20, AD9, AD15, AD21, AE12, AE18, AF3, AF26	—	—	—
GV_{DD}	U9, V9, W10, W19, Y11, Y12, Y14, Y15, Y17, Y18, AA6, AB5, AC9, AC12, AC15, AC18, AC21, AC24, AD6, AD8, AD14, AD20, AE5, AE11, AE17, AG2, AG27	Power for DDR DRAM I/O voltage (2.5 V)	GV_{DD}	—
LV_{DD1}	U20, W25	Power for three speed Ethernet #1 and for Ethernet management interface I/O (2.5V, 3.3V)	LV_{DD1}	—
LV_{DD2}	V20, Y23	Power for three speed Ethernet #2 I/O (2.5 V, 3.3 V)	LV_{DD2}	—
V_{DD}	J11, J12, J15, K10, K11, K12, K13, K14, K15, K16, K17, K18, K19, L10, L11, L18, L19, M10, M19, N10, N19, P9, P10, P19, R10, R19, R20, T10, T19, U10, U19, V10, V11, V18, V19, W11, W12, W13, W14, W15, W16, W17, W18	Power for core (1.2 V)	V_{DD}	—

Table 51. MPC8343EA (PBGA) Pinout Listing (continued)

Signal	Package Pin Number	Pin Type	Power Supply	Notes
OV_{DD}	B27, D3, D11, D19, E15, E23, F5, F8, F11, F14, F17, F20, G24, H23, H24, J6, J14, J17, J18, K4, L9, L20, L23, L25, M6, M9, M20, P5, P20, P23, R6, R9, R24, U23, V4, V6	PCI, 10/100 Ethernet, and other standard (3.3 V)	OV_{DD}	—
MVREF1	AF19	I	DDR reference voltage	—
MVREF2	AE10	I	DDR reference voltage	—
No Connection				
NC	A22, A23, A24, B22, B23, B24, C21, C22, C23, C24, D21, D22, D23, D24, E21, M27, M28, N26, N27, N28, P25, P26, P27, R28, T24, T25, T26, T27, T28, U27, U28, Y3, Y4, Y5, AA1, AA2, AA3, AA4, AB1, AB2, AB3, AB4, AC1, AC2, AC3, AC4, AD1, AD2, AD3, AD5, AD7, AD11, AD12, AE4, AE6, AE8, AE9, AE23, AF1, AF5, AF6, AF8, AF24, AG1, AG3, AG4, AG7, AG8, AG9, AG10, AH2, AH3, AH5, AH8, AH9, V5, V2, V1	—	—	—

Notes:

1. This pin is an open-drain signal. A weak pull-up resistor (1 kΩ) should be placed on this pin to OV_{DD}.
2. This pin is an open-drain signal. A weak pull-up resistor (2–10 kΩ) should be placed on this pin to OV_{DD}.
3. During reset, this output is actively driven rather than three-stated.
4. These JTAG pins have weak internal pull-up P-FETs that are always enabled.
5. This pin should have a weak pull-up if the chip is in PCI host mode. Follow the PCI specifications.
6. This pin must be always be tied to GND.
7. This pin must always be pulled up to OV_{DD}.
8. Thermal sensitive resistor.
9. It is recommended that MDIC0 be tied to GND using an 18.2 Ω resistor and MDIC1 be tied to DDR power using an 18.2 Ω resistor.
10. TSEC1_TXD[3] is required an external pull-up resistor. For proper functionality of the device, this pin must be pulled up or actively driven high during a hard reset. No external pull-down resistors are allowed to be attached to this net.
11. A weak pull-up resistor (2–10 kΩ) should be placed on this pin to LV_{DD1}.
12. For systems that boot from local bus (GPCM)-controlled NOR flash, a pull up on LGPL4 is required.

19 Clocking

Figure 37 shows the internal distribution of the clocks.

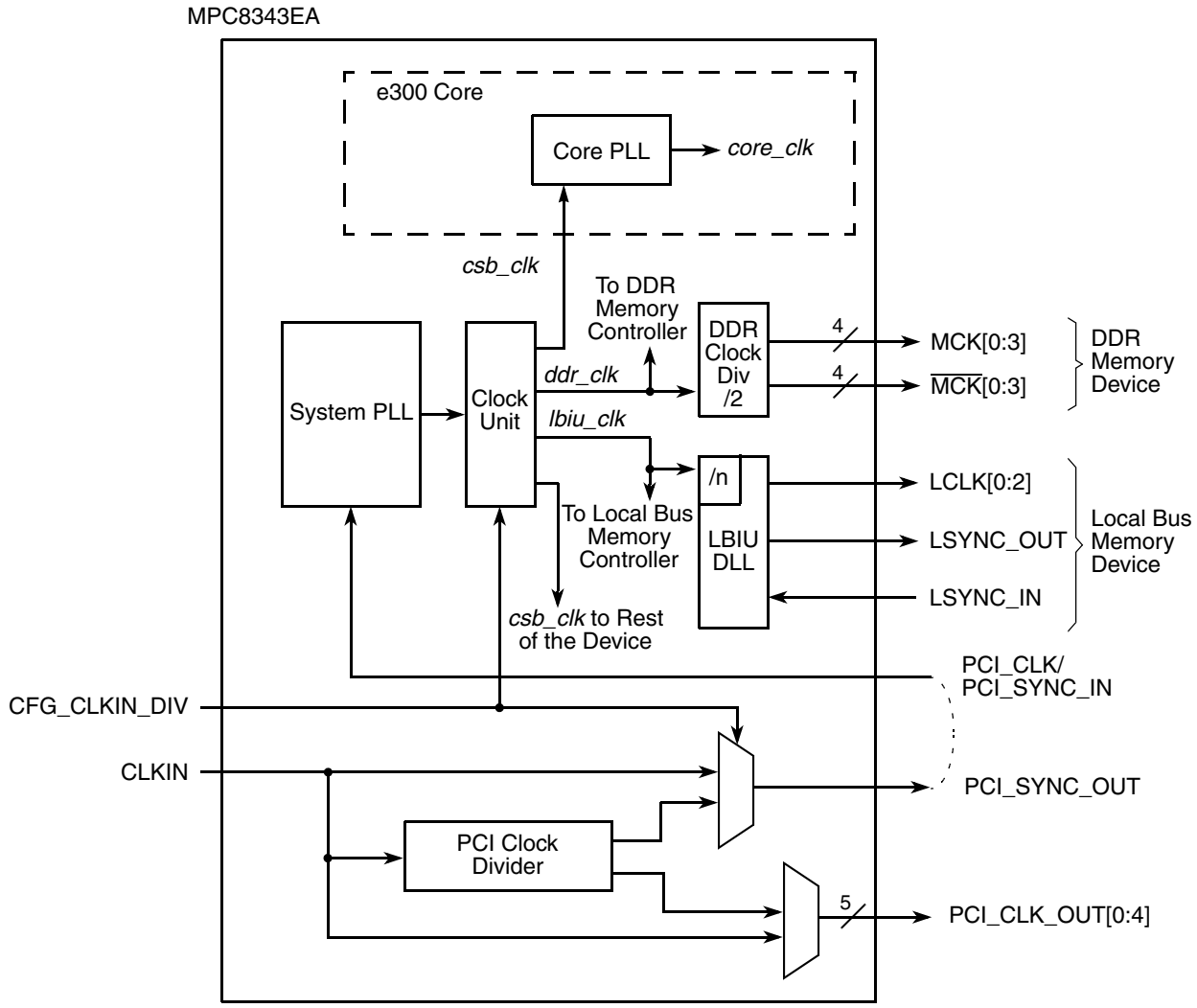

Figure 37. MPC8343EA Clock Subsystem

The primary clock source can be one of two inputs, CLKIN or PCI_CLK, depending on whether the device is configured in PCI host or PCI agent mode. When the MPC8343EA is configured as a PCI host device, CLKIN is its primary input clock. CLKIN feeds the PCI clock divider (÷2) and the multiplexors for PCI_SYNC_OUT and PCI_CLK_OUT. The CFG_CLKIN_DIV configuration input selects whether CLKIN or CLKIN/2 is driven out on the PCI_SYNC_OUT signal. The OCCR[PCICD*n*] parameters select whether CLKIN or CLKIN/2 is driven out on the PCI_CLK_OUT*n* signals.

PCI_SYNC_OUT is connected externally to PCI_SYNC_IN to allow the internal clock subsystem to synchronize to the system PCI clocks. PCI_SYNC_OUT must be connected properly to PCI_SYNC_IN, with equal delay to all PCI agent devices in the system, to allow the MPC8343EA to function. When the device is configured as a PCI agent device, PCI_CLK is the primary input clock and the CLKIN signal should be tied to GND.

As shown in Figure 37, the primary clock input (frequency) is multiplied up by the system phase-locked loop (PLL) and the clock unit to create the coherent system bus clock (*csb_clk*), the internal clock for the DDR controller (*ddr_clk*), and the internal clock for the local bus interface unit (*lbiu_clk*).

The *csb_clk* frequency is derived from a complex set of factors that can be simplified into the following equation:

$$csb_clk = \{PCI_SYNC_IN \times (1 + CFG_CLKIN_DIV)\} \times SPMF$$

In PCI host mode, PCI_SYNC_IN × (1 + CFG_CLKIN_DIV) is the CLKIN frequency.

The *csb_clk* serves as the clock input to the e300 core. A second PLL inside the e300 core multiplies the *csb_clk* frequency to create the internal clock for the e300 core (*core_clk*). The system and core PLL multipliers are selected by the SPMF and COREPLL fields in the reset configuration word low (RCWL), which is loaded at power-on reset or by one of the hard-coded reset options. See the chapter on reset, clocking, and initialization in the *MPC8349EA Reference Manual* for more information on the clock subsystem.

The internal *ddr_clk* frequency is determined by the following equation:

$$ddr_clk = csb_clk \times (1 + RCWL[DDRCM])$$

ddr_clk is not the external memory bus frequency; *ddr_clk* passes through the DDR clock divider (÷2) to create the differential DDR memory bus clock outputs (MCK and $\overline{\text{MCK}}$). However, the data rate is the same frequency as *ddr_clk*.

The internal *lbiu_clk* frequency is determined by the following equation:

$$lbiu_clk = csb_clk \times (1 + RCWL[LBIUCM])$$

lbiu_clk is not the external local bus frequency; *lbiu_clk* passes through the LBIU clock divider to create the external local bus clock outputs (LSYNC_OUT and LCLK[0:2]). The LBIU clock divider ratio is controlled by LCCR[CLKDIV].

In addition, some of the internal units may have to be shut off or operate at lower frequency than the *csb_clk* frequency. Those units have a default clock ratio that can be configured by a memory-mapped register after the device exits reset. Table 52 specifies which units have a configurable clock frequency.

Table 52. Configurable Clock Units

Unit	Default Frequency	Options
TSEC1	*csb_clk/3*	Off, *csb_clk, csb_clk/2, csb_clk/3*
TSEC2, I^2C1	*csb_clk/3*	Off, *csb_clk, csb_clk/2, csb_clk/3*
Security core	*csb_clk/3*	Off, *csb_clk,* csb_clk/2, *csb_clk/3*
USB DR, USB MPH	*csb_clk/3*	Off, csb_clk, csb_clk/2, *csb_clk/3*
PCI and DMA complex	*csb_clk*	Off, *csb_clk*

All frequency combinations shown in the table below may not be available. Maximum operating frequencies depend on the part ordered, see Section 22.1, “Part Numbers Fully Addressed by This Document,” for part ordering details and contact your Freescale Sales Representative or authorized distributor for more information.

Table 53 provides the operating frequencies for the MPC8343EA PBGA under recommended operating conditions.

Table 53. Operating Frequencies for PBGA

Parameter[1]	266 MHz	333 MHz	400 MHz	Unit
e300 core frequency (*core_clk*)	200–266	200–333	200–400	MHz
Coherent system bus frequency (*csb_clk*)	100–266			MHz
DDR1 memory bus frequency (MCK)[2]	100–133			MHz
DDR2 memory bus frequency (MCK)[3]	100–133			MHz
Local bus frequency (LCLK*n*)[4]	16.67–133			MHz
PCI input frequency (CLKIN or PCI_CLK)	25–66			MHz
Security core maximum internal operating frequency	133			MHz
USB_DR, USB_MPH maximum internal operating frequency	133			MHz

1 The CLKIN frequency, RCWL[SPMF], and RCWL[COREPLL] settings must be chosen so that the resulting *csb_clk*, MCLK, LCLK[0:2], and *core_clk* frequencies do not exceed their respective maximum or minimum operating frequencies. The value of SCCR[ENCCM], SCCR[USBDRCM], and SCCR[USBMPHCM] must be programmed so that the maximum internal operating frequency of the Security core and USB modules does not exceed the respective values listed in this table.

2 The DDR data rate is 2× the DDR memory bus frequency.

3 The DDR data rate is 2× the DDR memory bus frequency.

4 The local bus frequency is ½, ¼, or 1/8 of the *lbiu_clk* frequency (depending on LCCR[CLKDIV]) which is in turn 1× or 2× the *csb_clk* frequency (depending on RCWL[LBIUCM]).

19.1 System PLL Configuration

The system PLL is controlled by the RCWL[SPMF] parameter. Table 54 shows the multiplication factor encodings for the system PLL.

Table 54. System PLL Multiplication Factors

RCWL[SPMF]	System PLL Multiplication Factor
0000	× 16
0001	Reserved
0010	× 2
0011	× 3
0100	× 4
0101	× 5
0110	× 6
0111	× 7
1000	× 8
1001	× 9
1010	× 10

Table 54. System PLL Multiplication Factors (continued)

RCWL[SPMF]	System PLL Multiplication Factor
1011	× 11
1100	× 12
1101	× 13
1110	× 14
1111	× 15

As described in Section 19, "Clocking," the LBIUCM, DDRCM, and SPMF parameters in the reset configuration word low and the CFG_CLKIN_DIV configuration input signal select the ratio between the primary clock input (CLKIN or PCI_CLK) and the internal coherent system bus clock (*csb_clk*). Table 55 and Table 56 show the expected frequency values for the CSB frequency for select *csb_clk* to CLKIN/PCI_SYNC_IN ratios.

Table 55. CSB Frequency Options for Host Mode

CFG_CLKIN_DIV at Reset[1]	SPMF	*csb_clk* : Input Clock Ratio[2]	Input Clock Frequency (MHz)[2]			
			16.67	25	33.33	66.67
			csb_clk Frequency (MHz)			
Low	0010	2 : 1				133
Low	0011	3 : 1			100	200
Low	0100	4 : 1		100	133	266
Low	0101	5 : 1		125	166	333
Low	0110	6 : 1	100	150	200	
Low	0111	7 : 1	116	175	233	
Low	1000	8 : 1	133	200	266	
Low	1001	9 : 1	150	225	300	
Low	1010	10 : 1	166	250	333	
Low	1011	11 : 1	183	275		
Low	1100	12 : 1	200	300		
Low	1101	13 : 1	216	325		
Low	1110	14 : 1	233			
Low	1111	15 : 1	250			
Low	0000	16 : 1	266			

Table 55. CSB Frequency Options for Host Mode (continued)

CFG_CLKIN_DIV at Reset[1]	SPMF	*csb_clk* : Input Clock Ratio[2]	Input Clock Frequency (MHz)[2]			
			16.67	25	33.33	66.67
			csb_clk Frequency (MHz)			
High	0010	2 : 1				133
High	0011	3 : 1			100	200
High	0100	4 : 1			133	266
High	0101	5 : 1			166	333
High	0110	6 : 1			200	
High	0111	7 : 1			233	
High	1000	8 : 1				

1 CFG_CLKIN_DIV selects the ratio between CLKIN and PCI_SYNC_OUT.

2 CLKIN is the input clock in host mode; PCI_CLK is the input clock in agent mode.

DDR2 memory may be used at 133 MHz provided that the memory components are specified for operation at this frequency.

Table 56. CSB Frequency Options for Agent Mode

CFG_CLKIN_DIV at Reset[1]	SPMF	*csb_clk* : Input Clock Ratio[2]	Input Clock Frequency (MHz)[2]			
			16.67	25	33.33	66.67
			csb_clk Frequency (MHz)			
Low	0010	2 : 1				133
Low	0011	3 : 1			100	200
Low	0100	4 : 1		100	133	266
Low	0101	5 : 1		125	166	333
Low	0110	6 : 1	100	150	200	
Low	0111	7 : 1	116	175	233	
Low	1000	8 : 1	133	200	266	
Low	1001	9 : 1	150	225	300	
Low	1010	10 : 1	166	250	333	
Low	1011	11 : 1	183	275		
Low	1100	12 : 1	200	300		
Low	1101	13 : 1	216	325		
Low	1110	14 : 1	233			
Low	1111	15 : 1	250			
Low	0000	16 : 1	266			
High	0010	4 : 1		100	133	266

Table 56. CSB Frequency Options for Agent Mode (continued)

CFG_CLKIN_DIV at Reset[1]	SPMF	*csb_clk* : Input Clock Ratio[2]	Input Clock Frequency (MHz)[2]			
			16.67	25	33.33	66.67
			csb_clk Frequency (MHz)			
High	0011	6 : 1	100	150	200	
High	0100	8 : 1	133	200	266	
High	0101	10 : 1	166	250	333	
High	0110	12 : 1	200	300		
High	0111	14 : 1	233			
High	1000	16 : 1	266			

1 CFG_CLKIN_DIV doubles csb_clk if set high.

2 CLKIN is the input clock in host mode; PCI_CLK is the input clock in agent mode.

DDR2 memory may be used at 133 MHz provided that the memory components are specified for operation at this frequency.

19.2 Core PLL Configuration

RCWL[COREPLL] selects the ratio between the internal coherent system bus clock (*csb_clk*) and the e300 core clock (*core_clk*). Table 57 shows the encodings for RCWL[COREPLL]. COREPLL values that are not listed in Table 57 should be considered as reserved.

NOTE

Core VCO frequency = core frequency × VCO divider

VCO divider must be set properly so that the core VCO frequency is in the range of 800–1800 MHz.

Table 57. e300 Core PLL Configuration

RCWL[COREPLL]			*core_clk* : *csb_clk* Ratio	VCO Divider[1]
0–1	2–5	6		
nn	**0000**	n	PLL bypassed (PLL off, *csb_clk* clocks core directly)	PLL bypassed (PLL off, *csb_clk* clocks core directly)
00	**0001**	0	1:1	2
01	**0001**	0	1:1	4
10	**0001**	0	1:1	8
11	**0001**	0	1:1	8
00	**0001**	1	1.5:1	2
01	**0001**	1	1.5:1	4
10	**0001**	1	1.5:1	8
11	**0001**	1	1.5:1	8

Table 57. e300 Core PLL Configuration (continued)

RCWL[COREPLL]			*core_clk* : *csb_clk* Ratio	VCO Divider[1]
0–1	2–5	6		
00	0010	0	2:1	2
01	0010	0	2:1	4
10	0010	0	2:1	8
11	0010	0	2:1	8
00	0010	1	2.5:1	2
01	0010	1	2.5:1	4
10	0010	1	2.5:1	8
11	0010	1	2.5:1	8
00	0011	0	3:1	2
01	0011	0	3:1	4
10	0011	0	3:1	8
11	0011	0	3:1	8

1 Core VCO frequency = core frequency × VCO divider. The VCO divider must be set properly so that the core VCO frequency is in the range of 800–1800 MHz.

19.3 Suggested PLL Configurations

Table 58 shows suggested PLL configurations for 33 and 66 MHz input clocks, when CFG_CLKIN_DIV is low at reset.

Table 58. Suggested PLL Configurations

Ref No.[1]	RCWL		266 MHz Device			333 MHz Device			400 MHz Device		
	SPMF	CORE PLL	Input Clock Freq (MHz)[2]	CSB Freq (MHz)	Core Freq (MHz)	Input Clock Freq (MHz)[2]	CSB Freq (MHz)	Core Freq (MHz)	Input Clock Freq (MHz)[2]	CSB Freq (MHz)	Core Freq (MHz)
33 MHz CLKIN/PCI_CLK Options											
343	0011	1000011	33	100	150	33	100	150	33	100	150
324	0011	0100100	33	100	200	33	100	200	33	100	200
423	0100	0100011	33	133	200	33	133	200	33	133	200
622	0110	0100010	33	200	200	33	200	200	33	200	200
523	0101	0100011	33	166	250	33	166	250	33	166	250
424	0100	0100100	33	133	266	33	133	266	33	133	266
822	1000	0100010	33	266	266	33	266	266	33	266	266

Table 58. Suggested PLL Configurations (continued)

Ref No.[1]	RCWL		266 MHz Device			333 MHz Device			400 MHz Device		
	SPMF	CORE PLL	Input Clock Freq (MHz)[2]	CSB Freq (MHz)	Core Freq (MHz)	Input Clock Freq (MHz)[2]	CSB Freq (MHz)	Core Freq (MHz)	Input Clock Freq (MHz)[2]	CSB Freq (MHz)	Core Freq (MHz)
326	**0011**	**0100110**	—			33	100	300	33	100	300
623	**0110**	**0100011**	—			33	200	300	33	200	300
922	**1001**	**0100010**	—			33	300	300	33	300	300
425	**0100**	**0100101**	—			33	133	333	33	133	333
524	**0101**	**0100100**	—			33	166	333	33	166	333
A22	**1010**	**0100010**	—			33	333	333	33	333	333
723	**0111**	**0100011**	—			—			33	233	350
604	**0110**	**0000100**	—			—			33	200	400
624	**0110**	**0100100**	—			—			33	200	400
823	1000	0100011	—			—			33	266	400
66 MHz CLKIN/PCI_CLK Options											
242	**0010**	**1000010**	66	133	133	66	133	133	66	133	133
322	**0011**	**0100010**	66	200	200	66	200	200	66	200	200
224	**0010**	**0100100**	66	133	266	66	133	266	66	133	266
422	**0100**	**0100010**	66	266	266	66	266	266	66	266	266
323	**0011**	**0100011**	—			66	200	300	66	200	300
223	**0010**	**0100101**	—			66	133	333	66	133	333
522	**0101**	**0100010**	—			66	333	333	66	333	333
304	**0011**	**0000100**	—			—			66	200	400
324	**0011**	**0100100**	—			—			66	200	400
403	**0100**	**0000011**	—			—			66	266	400
423	**0100**	**0100011**	—			—			66	266	400

1 The PLL configuration reference number is the hexadecimal representation of RCWL, bits 4–15 associated with the SPMF and COREPLL settings given in the table.

2 The input clock is CLKIN for PCI host mode or PCI_CLK for PCI agent mode.

20 Thermal

This section describes the thermal specifications of the MPC8343EA.

20.1 Thermal Characteristics

.Table 59 provides the package thermal characteristics for the 620 29 × 29 mm PBGA of the MPC8343EA.

Table 59. Package Thermal Characteristics for PBGA

Parameter	Symbol	Value	Unit	Notes
Junction-to-ambient natural convection on single-layer board (1s)	$R_{\theta JA}$	21	°C/W	1, 2
Junction-to-ambient natural convection on four-layer board (2s2p)	$R_{\theta JMA}$	15	°C/W	1, 3
Junction-to-ambient (at 200 ft/min) on single-layer board (1s)	$R_{\theta JMA}$	17	°C/W	1, 3
Junction-to-ambient (at 200 ft/min) on four-layer board (2s2p)	$R_{\theta JMA}$	12	°C/W	1, 3
Junction-to-board thermal	$R_{\theta JB}$	6	°C/W	4
Junction-to-case thermal	$R_{\theta JC}$	5	°C/W	5
Junction-to-package natural convection on top	ψ_{JT}	5	°C/W	6

Notes

1. Junction temperature is a function of die size, on-chip power dissipation, package thermal resistance, mounting site (board) temperature, ambient temperature, air flow, power dissipation of other components on the board, and board thermal resistance.
2. Per SEMI G38-87 and JEDEC JESD51-2 with the single-layer board horizontal.
3. Per JEDEC JESD51-6 with the board horizontal.
4. Thermal resistance between the die and the printed-circuit board per JEDEC JESD51-8. Board temperature is measured on the top surface of the board near the package.
5. Thermal resistance between the die and the case top surface as measured by the cold plate method (MIL SPEC-883 Method 1012.1).
6. Thermal characterization parameter indicating the temperature difference between package top and the junction temperature per JEDEC JESD51-2. When Greek letters are not available, the thermal characterization parameter is written as Psi-JT.

20.2 Thermal Management Information

For the following sections, $P_D = (V_{DD} \times I_{DD}) + P_{I/O}$ where $P_{I/O}$ is the power dissipation of the I/O drivers. See Table 5 for I/O power dissipation values.

20.2.1 Estimation of Junction Temperature with Junction-to-Ambient Thermal Resistance

An estimation of the chip junction temperature, T_J, can be obtained from the equation:

$$T_J = T_A + (R_{\theta JA} \times P_D)$$

where:

T_J = junction temperature (°C)

T_A = ambient temperature for the package (°C)

$R_{\theta JA}$ = junction-to-ambient thermal resistance (°C/W)

P_D = power dissipation in the package (W)

The junction-to-ambient thermal resistance is an industry-standard value that provides a quick and easy estimation of thermal performance. Generally, the value obtained on a single-layer board is appropriate for a tightly packed printed-circuit board. The value obtained on the board with the internal planes is usually appropriate if the board has low power dissipation and the components are well separated. Test cases have demonstrated that errors of a factor of two (in the quantity $T_J - T_A$) are possible.

20.2.2 Estimation of Junction Temperature with Junction-to-Board Thermal Resistance

The thermal performance of a device cannot be adequately predicted from the junction-to-ambient thermal resistance. The thermal performance of any component is strongly dependent on the power dissipation of surrounding components. In addition, the ambient temperature varies widely within the application. For many natural convection and especially closed box applications, the board temperature at the perimeter (edge) of the package is approximately the same as the local air temperature near the device. Specifying the local ambient conditions explicitly as the board temperature provides a more precise description of the local ambient conditions that determine the temperature of the device.

At a known board temperature, the junction temperature is estimated using the following equation:

$$T_J = T_A + (R_{\theta JA} \times P_D)$$

where:

T_J = junction temperature (°C)

T_A = ambient temperature for the package (°C)

$R_{\theta JA}$ = junction-to-ambient thermal resistance (°C/W)

P_D = power dissipation in the package (W)

When the heat loss from the package case to the air can be ignored, acceptable predictions of junction temperature can be made. The application board should be similar to the thermal test condition: the component is soldered to a board with internal planes.

20.2.3 Experimental Determination of Junction Temperature

To determine the junction temperature of the device in the application after prototypes are available, use the thermal characterization parameter (Ψ_{JT}) to determine the junction temperature and a measure of the temperature at the top center of the package case using the following equation:

$$T_J = T_T + (\Psi_{JT} \times P_D)$$

where:

T_J = junction temperature (°C)

T_T = thermocouple temperature on top of package (°C)

Ψ_{JT} = junction-to-ambient thermal resistance (°C/W)

P_D = power dissipation in the package (W)

The thermal characterization parameter is measured per the JESD51-2 specification using a 40 gauge type T thermocouple epoxied to the top center of the package case. The thermocouple should be positioned so

that the thermocouple junction rests on the package. A small amount of epoxy is placed over the thermocouple junction and over about 1 mm of wire extending from the junction. The thermocouple wire is placed flat against the package case to avoid measurement errors caused by cooling effects of the thermocouple wire.

20.2.4 Heat Sinks and Junction-to-Case Thermal Resistance

Some application environments require a heat sink to provide the necessary thermal management of the device. When a heat sink is used, the thermal resistance is expressed as the sum of a junction-to-case thermal resistance and a case-to-ambient thermal resistance:

$$R_{\theta JA} = R_{\theta JC} + R_{\theta CA}$$

where:

$R_{\theta JA}$ = junction-to-ambient thermal resistance (°C/W)
$R_{\theta JC}$ = junction-to-case thermal resistance (°C/W)
$R_{\theta CA}$ = case-to-ambient thermal resistance (°C/W)

$R_{\theta JC}$ is device-related and cannot be influenced by the user. The user controls the thermal environment to change the case-to-ambient thermal resistance, $R_{\theta CA}$. For instance, the user can change the size of the heat sink, the air flow around the device, the interface material, the mounting arrangement on printed-circuit board, or change the thermal dissipation on the printed-circuit board surrounding the device.

The thermal performance of devices with heat sinks has been simulated with a few commercially available heat sinks. The heat sink choice is determined by the application environment (temperature, air flow, adjacent component power dissipation) and the physical space available. Because there is not a standard application environment, a standard heat sink is not required.

Table 60 shows heat sink thermal resistance for PBGA of the MPC8343EA.

Table 60. Heat Sink and Thermal Resistance of MPC8343EA (PBGA)

Heat Sink Assuming Thermal Grease	Air Flow	29 × 29 mm PBGA
		Thermal Resistance
AAVID 30 × 30 × 9.4 mm pin fin	Natural convection	13.5
AAVID 30 × 30 × 9.4 mm pin fin	1 m/s	9.6
AAVID 30 × 30 × 9.4 mm pin fin	2 m/s	8.8
AAVID 31 × 35 × 23 mm pin fin	Natural convection	11.3
AAVID 31 × 35 × 23 mm pin fin	1 m/s	8.1
AAVID 31 × 35 × 23 mm pin fin	2 m/s	7.5
Wakefield, 53 × 53 × 25 mm pin fin	Natural convection	9.1
Wakefield, 53 × 53 × 25 mm pin fin	1 m/s	7.1
Wakefield, 53 × 53 × 25 mm pin fin	2 m/s	6.5
MEI, 75 × 85 × 12 no adjacent board, extrusion	Natural convection	10.1

Table 60. Heat Sink and Thermal Resistance of MPC8343EA (PBGA) (continued)

Heat Sink Assuming Thermal Grease	Air Flow	29 × 29 mm PBGA
		Thermal Resistance
MEI, 75 × 85 × 12 no adjacent board, extrusion	1 m/s	7.7
MEI, 75 × 85 × 12 no adjacent board, extrusion	2 m/s	6.6
MEI, 75 × 85 × 12 mm, adjacent board, 40 mm side bypass	1 m/s	6.9

Accurate thermal design requires thermal modeling of the application environment using computational fluid dynamics software which can model both the conduction cooling and the convection cooling of the air moving through the application. Simplified thermal models of the packages can be assembled using the junction-to-case and junction-to-board thermal resistances listed in the thermal resistance table. More detailed thermal models can be made available on request.

Heat sink vendors include the following list:

Aavid Thermalloy 603-224-9988
80 Commercial St.
Concord, NH 03301
Internet: www.aavidthermalloy.com

Alpha Novatech 408-567-8082
473 Sapena Ct. #12
Santa Clara, CA 95054
Internet: www.alphanovatech.com

International Electronic Research Corporation (IERC) 818-842-7277
413 North Moss St.
Burbank, CA 91502
Internet: www.ctscorp.com

Millennium Electronics (MEI) 408-436-8770
Loroco Sites
671 East Brokaw Road
San Jose, CA 95112
Internet: www.mei-thermal.com

Tyco Electronics 800-522-2800
Chip Coolers™
P.O. Box 3668
Harrisburg, PA 17105-3668
Internet: www.chipcoolers.com

Wakefield Engineering 603-635-5102
33 Bridge St.
Pelham, NH 03076
Internet: www.wakefield.com

Interface material vendors include the following:

Chomerics, Inc. 77 Dragon Ct. Woburn, MA 01801 Internet: www.chomerics.com	781-935-4850
Dow-Corning Corporation Dow-Corning Electronic Materials P.O. Box 994 Midland, MI 48686-0997 Internet: www.dowcorning.com	800-248-2481
Shin-Etsu MicroSi, Inc. 10028 S. 51st St. Phoenix, AZ 85044 Internet: www.microsi.com	888-642-7674
The Bergquist Company 18930 West 78th St. Chanhassen, MN 55317 Internet: www.bergquistcompany.com	800-347-4572

20.3 Heat Sink Attachment

When heat sinks are attached, an interface material is required, preferably thermal grease and a spring clip. The spring clip should connect to the printed-circuit board, either to the board itself, to hooks soldered to the board, or to a plastic stiffener. Avoid attachment forces that can lift the edge of the package or peel the package from the board. Such peeling forces reduce the solder joint lifetime of the package. The recommended maximum force on the top of the package is 10 lb force (4.5 kg force). Any adhesive attachment should attach to painted or plastic surfaces, and its performance should be verified under the application requirements.

20.3.1 Experimental Determination of the Junction Temperature with a Heat Sink

When a heat sink is used, the junction temperature is determined from a thermocouple inserted at the interface between the case of the package and the interface material. A clearance slot or hole is normally required in the heat sink. Minimize the size of the clearance to minimize the change in thermal performance caused by removing part of the thermal interface to the heat sink. Because of the experimental difficulties with this technique, many engineers measure the heat sink temperature and then back calculate the case temperature using a separate measurement of the thermal resistance of the interface. From this case temperature, the junction temperature is determined from the junction-to-case thermal resistance.

$$T_J = T_C + (R_{\theta JC} \times P_D)$$

where:

T_J = junction temperature (°C)

T_C = case temperature of the package (°C)

$R_{\theta JC}$ = junction-to-case thermal resistance (°C/W)
P_D = power dissipation (W)

21 System Design Information

This section provides electrical and thermal design recommendations for successful application of the MPC8343EA.

21.1 System Clocking

The MPC8343EA includes two PLLs:

1. The platform PLL generates the platform clock from the externally supplied CLKIN input. The frequency ratio between the platform and CLKIN is selected using the platform PLL ratio configuration bits as described in Section 19.1, “System PLL Configuration.”
2. The e300 core PLL generates the core clock as a slave to the platform clock. The frequency ratio between the e300 core clock and the platform clock is selected using the e300 PLL ratio configuration bits as described in Section 19.2, “Core PLL Configuration.”

21.2 PLL Power Supply Filtering

Each PLL gets power through independent power supply pins ($AV_{DD}1$, $AV_{DD}2$, respectively). The AV_{DD} level should always equal to V_{DD}, and preferably these voltages are derived directly from V_{DD} through a low frequency filter scheme.

There are a number of ways to provide power reliably to the PLLs, but the recommended solution is to provide four independent filter circuits as illustrated in Figure 38, one to each of the four AV_{DD} pins. Independent filters to each PLL reduce the opportunity to cause noise injection from one PLL to the other.

The circuit filters noise in the PLL resonant frequency range from 500 kHz to 10 MHz. It should be built with surface mount capacitors with minimum effective series inductance (ESL). Consistent with the recommendations of Dr. Howard Johnson in *High Speed Digital Design: A Handbook of Black Magic* (Prentice Hall, 1993), multiple small capacitors of equal value are recommended over a single large value capacitor.

To minimize noise coupled from nearby circuits, each circuit should be placed as closely as possible to the specific AV_{DD} pin being supplied. It should be possible to route directly from the capacitors to the AV_{DD} pin, which is on the periphery of package, without the inductance of vias.

Figure 38 shows the PLL power supply filter circuit.

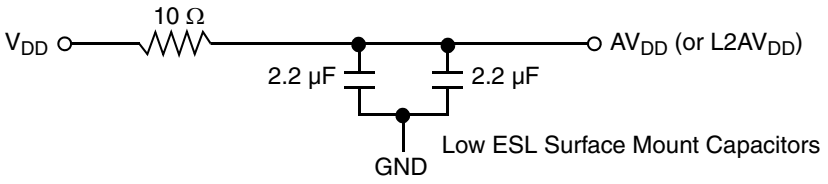

Figure 38. PLL Power Supply Filter Circuit

21.3 Decoupling Recommendations

Due to large address and data buses and high operating frequencies, the MPC8343EA can generate transient power surges and high frequency noise in its power supply, especially while driving large capacitive loads. This noise must be prevented from reaching other components in the MPC8343EA system, and the device itself requires a clean, tightly regulated source of power. Therefore, the system designer should place at least one decoupling capacitor at each V_{DD}, OV_{DD}, GV_{DD}, and LV_{DD} pin of the device. These capacitors should receive their power from separate V_{DD}, OV_{DD}, GV_{DD}, LV_{DD}, and GND power planes in the PCB, with short traces to minimize inductance. Capacitors can be placed directly under the device using a standard escape pattern. Others can surround the part.

These capacitors should have a value of 0.01 or 0.1 µF. Only ceramic SMT (surface mount technology) capacitors should be used to minimize lead inductance, preferably 0402 or 0603 sizes.

In addition, distribute several bulk storage capacitors around the PCB, feeding the V_{DD}, OV_{DD}, GV_{DD}, and LV_{DD} planes, to enable quick recharging of the smaller chip capacitors. These bulk capacitors should have a low ESR (equivalent series resistance) rating to ensure the quick response time. They should also be connected to the power and ground planes through two vias to minimize inductance. Suggested bulk capacitors are 100–330 µF (AVX TPS tantalum or Sanyo OSCON).

21.4 Connection Recommendations

To ensure reliable operation, connect unused inputs to an appropriate signal level. Unused active low inputs should be tied to OV_{DD}, GV_{DD}, or LV_{DD} as required. Unused active high inputs should be connected to GND. All NC (no-connect) signals must remain unconnected.

Power and ground connections must be made to all external V_{DD}, GV_{DD}, LV_{DD}, OV_{DD}, and GND pins of the MPC8343EA.

21.5 Output Buffer DC Impedance

The MPC8343EA drivers are characterized over process, voltage, and temperature. For all buses, the driver is a push-pull single-ended driver type (open drain for I^2C).

To measure Z_0 for the single-ended drivers, an external resistor is connected from the chip pad to OV_{DD} or GND. Then the value of each resistor is varied until the pad voltage is $OV_{DD}/2$ (see Figure 39). The output impedance is the average of two components, the resistances of the pull-up and pull-down devices. When data is held high, SW1 is closed (SW2 is open) and R_P is trimmed until the voltage at the pad equals

$OV_{DD}/2$. R_P then becomes the resistance of the pull-up devices. R_P and R_N are designed to be close to each other in value. Then, $Z_0 = (R_P + R_N) \div 2$.

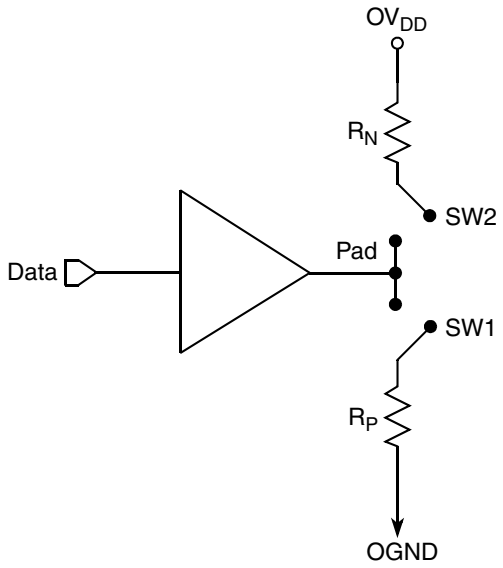

Figure 39. Driver Impedance Measurement

Two measurements give the value of this resistance and the strength of the driver current source. First, the output voltage is measured while driving logic 1 without an external differential termination resistor. The measured voltage is $V_1 = R_{source} \times I_{source}$. Second, the output voltage is measured while driving logic 1 with an external precision differential termination resistor of value R_{term}. The measured voltage is $V_2 = (1 \div (1/R_1 + 1/R_2)) \times I_{source}$. Solving for the output impedance gives $R_{source} = R_{term} \times (V_1 \div V_2 - 1)$. The drive current is then $I_{source} = V_1 \div R_{source}$.

Table 61 summarizes the signal impedance targets. The driver impedance are targeted at minimum V_{DD}, nominal OV_{DD}, 105°C.

Table 61. Impedance Characteristics

Impedance	Local Bus, Ethernet, DUART, Control, Configuration, Power Management	PCI Signals (Not Including PCI Output Clocks)	PCI Output Clocks (Including PCI_SYNC_OUT)	DDR DRAM	Symbol	Unit
R_N	42 Target	25 Target	42 Target	20 Target	Z_0	W
R_P	42 Target	25 Target	42 Target	20 Target	Z_0	W
Differential	NA	NA	NA	NA	Z_{DIFF}	W

Note: Nominal supply voltages. See Table 1, T_j = 105°C.

21.6 Configuration Pin Multiplexing

The MPC8343EA power-on configuration options can be set through external pull-up or pull-down resistors of 4.7 kΩ on certain output pins (see the customer-visible configuration pins). These pins are used as output only pins in normal operation.

However, while $\overline{\text{HRESET}}$ is asserted, these pins are treated as inputs, and the value on these pins is latched when $\overline{\text{PORESET}}$ deasserts. Then the input receiver is disabled and the I/O circuit takes on its normal function. Careful board layout with stubless connections to these pull-up/pull-down resistors coupled with the large value of the pull-up/pull-down resistor should minimize the disruption of signal quality or speed for the output pins.

21.7 Pull-Up Resistor Requirements

The MPC8343EA requires high resistance pull-up resistors (10 kΩ is recommended) on open-drain pins, including I^2C pins, and IPIC interrupt pins.

For more information on required pull-up resistors and the connections required for the JTAG interface, refer to application note AN2931, “PowerQUICC Design Checklist.”

22 Ordering Information

This section presents ordering information for the device discussed in this document, and it shows an example of how the parts are marked.

NOTE

The information in this document is accurate for revision 3.x silicon and later (in other words, for orderable part numbers ending in A or B). For information on revision 1.1 silicon and earlier versions, see the *MPC8343E PowerQUICC II Pro Integrated Host Processor Hardware Specifications* (Document Order No. MPC8343EEC).

22.1 Part Numbers Fully Addressed by This Document

Table 62 shows an analysis of the Freescale part numbering nomenclature for the MPC8343EA. The individual part numbers correspond to a maximum processor core frequency. Each part number also contains a revision code that refers to the die mask revision number. For available frequency configuration

parts including extended temperatures, refer to the device product summary page on our website listed on the back cover of this document or, contact your local Freescale sales office.

Table 62. Part Numbering Nomenclature

MPC	nnnn	e	t	pp	aa	a	r
Product Code	**Part Identifier**	**Encryption Acceleration**	**Temperature[1] Range**	**Package[2]**	**Processor Frequency[3]**	**Platform Frequency**	**Revision Level**
MPC	8343	Blank = Not included E = included	Blank = 0 to 105°C C = –40 to 105°C	ZQ = PBGA VR = PB Free PBGA	e300 core speed AD = 266 AG = 400	D = 266	B = 3.1

Notes:
1. For temperature range = C, processor frequency is limited to 400 with a platform frequency of 266 and up to with a platform frequency of 333
2. See Section 18, “Package and Pin Listings,” for more information on available package types.
3. Processor core frequencies supported by parts addressed by this specification only. Not all parts described in this specification support all core frequencies. Additionally, parts addressed by Part Number Specifications may support other maximum core frequencies.

Table 63 shows the SVR settings by device and package type.

Table 63. SVR Settings

Device	Package	SVR (Rev. 3.0)
MPC8343EA	PBGA	8056_0030
MPC8343A	PBGA	8057_0030

22.2 Part Marking

Parts are marked as in the example shown in Figure 40.

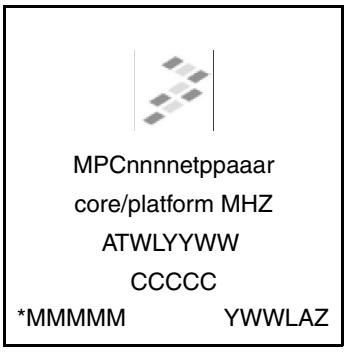

PBGA

Notes:
ATWLYYWW is the traceability code.
CCCCC is the country code.
MMMMM is the mask number.
YWWLAZ is the assembly traceability code.

Figure 40. Freescale Part Marking for PBGA Devices

23 Document Revision History

This table provides a revision history of this document.

Table 64. Document Revision History

Rev. Number	Date	Substantive Change(s)
11	09/2011	• In Section 2.2, "Power Sequencing," added Section 2.2.1, "Power-Up Sequencing" and Figure 4. • In Table 25, Table 29, and Table 27, removed the GTX_CLK125. • In Table 30, updated t_{MDKHDX} Max value from 170ns to 70ns.
10	11/2010	• In Table 51, added overbar to $\overline{LCS}$[4] and $\overline{LCS}$[5] signals. In Table 51 added note for pin LGPL4. • In Section 21.7, "Pull-Up Resistor Requirements, updated the list of open drain type pins.
9	05/2010	• In Table 25 through Table 26, changed V_{IL}(min) to V_{IH}(max) to (20%–80%). • Added Table 8, "EC_GTX_CLK125 AC Timing Specifications."
8	5/2009	• In Section 18.1, "Package Parameters for the MPC8343EA PBGA, changed solder ball for TBGA and PBGA from 95.5 Sn/0.5 Cu/4 Ag to 96.5 Sn/3.5 Ag. • In Table 53, added two columns for the DDR1 and DDR2 memory bus frequency. • In Table 62, footnote 1, changed 667(TBGA) to 533(TBGA). footnote 4, added data rate for DDR1 and DDR2.
7	2/2009	• Added footnote 6 to Table 7. • In Section 9.2, "USB AC Electrical Specifications," clarified that AC table is for ULPI only. • In Table 35, corrected t_{LBKHOV} parameter to t_{LBKLOV} (output data is driven on falling edge of clock in DLL bypass mode). Similarly, made the same correction to Figure 18, Figure 20, and Figure 21 for output signals. • Added footnote 10 to Table 51. • In Table 51, updated note 11 to say the following: "SEC1_TXD[3] is required an external pull-up resistor. For proper functionality of the device, this pin must be pulled up or actively driven high during a hard reset. No external pull-down resistors are allowed to be attached to this net." • In Section 21.1, "System Clocking," removed "(AVDD1)" and "(AVDD2") from bulleted list. • In Section 21.2, "PLL Power Supply Filtering," in the second paragraph, changed "provide five independent filter circuits," and "the five AVDD pins" to provide four independent filter circuits," and "the four AVDD pins." • In Table 62, updated note 1 to say the following: "For temperature range = C, processor frequency is limited to 400 with a platform frequency of 266."
6	4/2007	• In Table 3, "Output Drive Capability," changed the values in the Output Impedance column and added USB to the seventh row. • In Section 21.7, "Pull-Up Resistor Requirements,"deleted last two paragraphs and after first paragraph, added a new paragraph. • Deleted Section 21.8, "JTAG Configuration Signals," and Figure 43, "JTAG Interface Connection."
5	3/2007	• Page 1, updated first paragraph to reflect PowerQUICC II Pro information. • In Table 18, "DDR and DDR2 SDRAM Input AC Timing Specifications," added note 2 to t_{CISKEW} and deleted original note 3; renumbered the remaining notes. • In Figure 38, "JTAG Interface Connection," updated with new figure. • In Figure 38, "JTAG Interface Connection," updated with new figure. • In Section 23, "Ordering Information," replaced first paragraph and added a note. • In Section 23.1, "Part Numbers Fully Addressed by this Document," replaced first paragraph.
4	12/2006	Table 19, "DDR and DDR2 SDRAM Output AC Timing Specifications," modified T_{ddkhds} for 333 MHz from 900 ps to 775 ps.

Table 64. Document Revision History (continued)

Rev. Number	Date	Substantive Change(s)
3	11/2006	• Updated note in introduction. • In the features list in Section 1, “Overview,” updated DDR data rate to show 266 MHz for PBGA parts for all silicon revisions. • In Table 57, “Suggested PLL Configurations,” added the following row: • Ref No: 823, SPMF: 1000, Core PLL: 0100011, 400-MHz Device Input Clock Freq: 33, CSB Freq: 266, and Core Freq: 400. • In Section 23, “Ordering Information,” replicated note from document introduction.
2	8/2006	• Changed all references to revision 2.0 silicon to revision 3.0 silicon. • Changed number of general purpose parallel I/O pins to 39 in Section 1, “Overview.” • Changed VIH minimum value in Table 35, “JTAG Interface DC Electrical Characteristics,” to OV_{DD} – 0.3. • In Table 40, “PCI DC Electrical Characteristics,” changed high-level input voltage values to min = 2 and max = OV_{DD} + 0.3; changed low-level input voltage values to min = (–0.3) and max = 0.8. • In Table 44, “PCI DC Electrical Characteristics,” changed high-level input voltage values to min = 2 and max = OV_{DD} + 0.3; changed low-level input voltage values to min = (–0.3) and max = 0.8. • In Table 44, “PCI DC Electrical Characteristics,” changed high-level input voltage values to min = 2 and max = OV_{DD} + 0.3; changed low-level input voltage values to min = (–0.3) and max = 0.8. • Updated DDR2 I/O power values in Table 5, “MPC8347EA Typical I/O Power Dissipation.” •
1	4/2006	• Removed Table 20, “Timing Parameters for DDR2-400.” • Changed ADDR/CMD to ADDR/CMD/MODT in Table 9, “DDR and DDR2 SDRAM Output AC Timing Specifications,” rows 2 and 3, and in Figure 2, “DDR SDRAM Output Timing Diagram. • Changed Min and Max values for V_{IH} and VIL in Table 40Table 44,“PCI DC Electrical Characteristics.” • In Table 58, “MPC8343EA (PBGA) Pinout Listing,” and Table 52, “MPC8347EA (PBGA) Pinout Listing,” modified rows for MDICO and MDIC1 signals and added note ‘It is recommended that MDICO be tied to GRD using an 18 Ω resistor and MCIC1 be tied to DDR power using an 18 Ω resistor.’ • Table 58, “MPC8343EA (PBGA) Pinout Listing,” in row AVDD3 changed power supply from “AVDD3” to ‘—.’
0	3/2006	Initial public release

How to Reach Us:

Home Page:
www.freescale.com

Web Support:
http://www.freescale.com/support

USA/Europe or Locations Not Listed:
Freescale Semiconductor, Inc.
Technical Information Center, EL516
2100 East Elliot Road
Tempe, Arizona 85284
1-800-521-6274 or
+1-480-768-2130
www.freescale.com/support

Europe, Middle East, and Africa:
Freescale Halbleiter Deutschland GmbH
Technical Information Center
Schatzbogen 7
81829 Muenchen, Germany
+44 1296 380 456 (English)
+46 8 52200080 (English)
+49 89 92103 559 (German)
+33 1 69 35 48 48 (French)
www.freescale.com/support

Japan:
Freescale Semiconductor Japan Ltd.
Headquarters
ARCO Tower 15F
1-8-1, Shimo-Meguro, Meguro-ku
Tokyo 153-0064
Japan
0120 191014 or
+81 3 5437 9125
support.japan@freescale.com

Asia/Pacific:
Freescale Semiconductor China Ltd.
Exchange Building 23F
No. 118 Jianguo Road
Chaoyang District
Beijing 100022
China
+86 10 5879 8000
support.asia@freescale.com

For Literature Requests Only:
Freescale Semiconductor
Literature Distribution Center
1-800 441-2447 or
+1-303-675-2140
Fax: +1-303-675-2150
LDCForFreescaleSemiconductor
@hibbertgroup.com

Information in this document is provided solely to enable system and software implementers to use Freescale Semiconductor products. There are no express or implied copyright licenses granted hereunder to design or fabricate any integrated circuits or integrated circuits based on the information in this document.

Freescale Semiconductor reserves the right to make changes without further notice to any products herein. Freescale Semiconductor makes no warranty, representation or guarantee regarding the suitability of its products for any particular purpose, nor does Freescale Semiconductor assume any liability arising out of the application or use of any product or circuit, and specifically disclaims any and all liability, including without limitation consequential or incidental damages. “Typical” parameters which may be provided in Freescale Semiconductor data sheets and/or specifications can and do vary in different applications and actual performance may vary over time. All operating parameters, including “Typicals” must be validated for each customer application by customer’s technical experts. Freescale Semiconductor does not convey any license under its patent rights nor the rights of others. Freescale Semiconductor products are not designed, intended, or authorized for use as components in systems intended for surgical implant into the body, or other applications intended to support or sustain life, or for any other application in which the failure of the Freescale Semiconductor product could create a situation where personal injury or death may occur. Should Buyer purchase or use Freescale Semiconductor products for any such unintended or unauthorized application, Buyer shall indemnify and hold Freescale Semiconductor and its officers, employees, subsidiaries, affiliates, and distributors harmless against all claims, costs, damages, and expenses, and reasonable attorney fees arising out of, directly or indirectly, any claim of personal injury or death associated with such unintended or unauthorized use, even if such claim alleges that Freescale Semiconductor was negligent regarding the design or manufacture of the part.

Freescale, the Freescale logo and PowerQUICC are trademarks of Freescale Semiconductor, Inc. Reg. U.S. Pat. & Tm. Off. The Power Architecture and Power.org word marks and the Power and Power.org logos and related marks are trademarks and service marks licensed by Power.org.
© 2006–2011 Freescale Semiconductor, Inc.

Document Number: MPC8343EAEC
Rev. 11
09/2011

Looking for pricing, stock, or lifecycle information?

Click below to explore more details on WIN SOURCE:

- View MPC8343EZQAGDB on WIN SOURCE
- NXP / Nexperia Information

Optimize Your Supply Chain with WIN SOURCE Solutions

- Global Sourcing Solution
- Obsolete Management
- Cost Control Management
- Shortage Management
- Alternative Solution
- Excess Inventory Management