Freescale Semiconductor
Technical Data

Document Number: MPC850EC
Rev. 2, 07/2005

MPC850 PowerQUICC™ Integrated Communications Processor Hardware Specifications

This document contains detailed information on power considerations, AC/DC electrical characteristics, and AC timing specifications for revision A,B, and C of the MPC850 Family.

Contents

1. Overview 1
2. Features 3
3. Electrical and Thermal Characteristics 7
4. Thermal Characteristics 8
5. Power Considerations 9
6. Bus Signal Timing 10
7. IEEE 1149.1 Electrical Specifications 39
8. CPM Electrical Characteristics 41
9. Mechanical Data and Ordering Information 63
10. Document Revision History 68

1 Overview

The MPC850 is a versatile, one-chip integrated microprocessor and peripheral combination that can be used in a variety of controller applications, excelling particularly in communications and networking products. The MPC850, which includes support for Ethernet, is specifically designed for cost-sensitive, remote-access, and telecommunications applications. It is provides functions similar to the MPC860, with system enhancements such as universal serial bus (USB) support and a larger (8-Kbyte) dual-port RAM.

In addition to a high-performance embedded MPC8xx core, the MPC850 integrates system functions, such as a versatile memory controller and a communications processor module (CPM) that incorporates a specialized, independent RISC communications processor (referred to as the CP). This separate processor off-loads peripheral tasks from the embedded MPC8xx core.

© Freescale Semiconductor, Inc., 2005. All rights reserved.

freescale™ semiconductor

The CPM of the MPC850 supports up to seven serial channels, as follows:

- One or two serial communications controllers (SCCs). The SCCs support Ethernet, ATM (MPC850SR and MPC850DSL), HDLC and a number of other protocols, along with a transparent mode of operation.
- One USB channel
- Two serial management controllers (SMCs)
- One I^2C port
- One serial peripheral interface (SPI).

Table 1 shows the functionality supported by the members of the MPC850 family.

Table 1. MPC850 Functionality Matrix

Part	Number of SCCs Supported	Ethernet Support	ATM Support	USB Support	Multi-channel HDLC Support	Number of PCMCIA Slots Supported
MPC850	1	Yes	-	Yes	-	1
MPC850DE	2	Yes	-	Yes	-	1
MPC850SR	2	Yes	Yes	Yes	Yes	1
MPC850DSL	2	Yes	Yes	Yes	No	1

Additional documentation may be provided for parts listed in Table 1.

2 Features

Figure 1 is a block diagram of the MPC850, showing its major components and the relationships among those components:

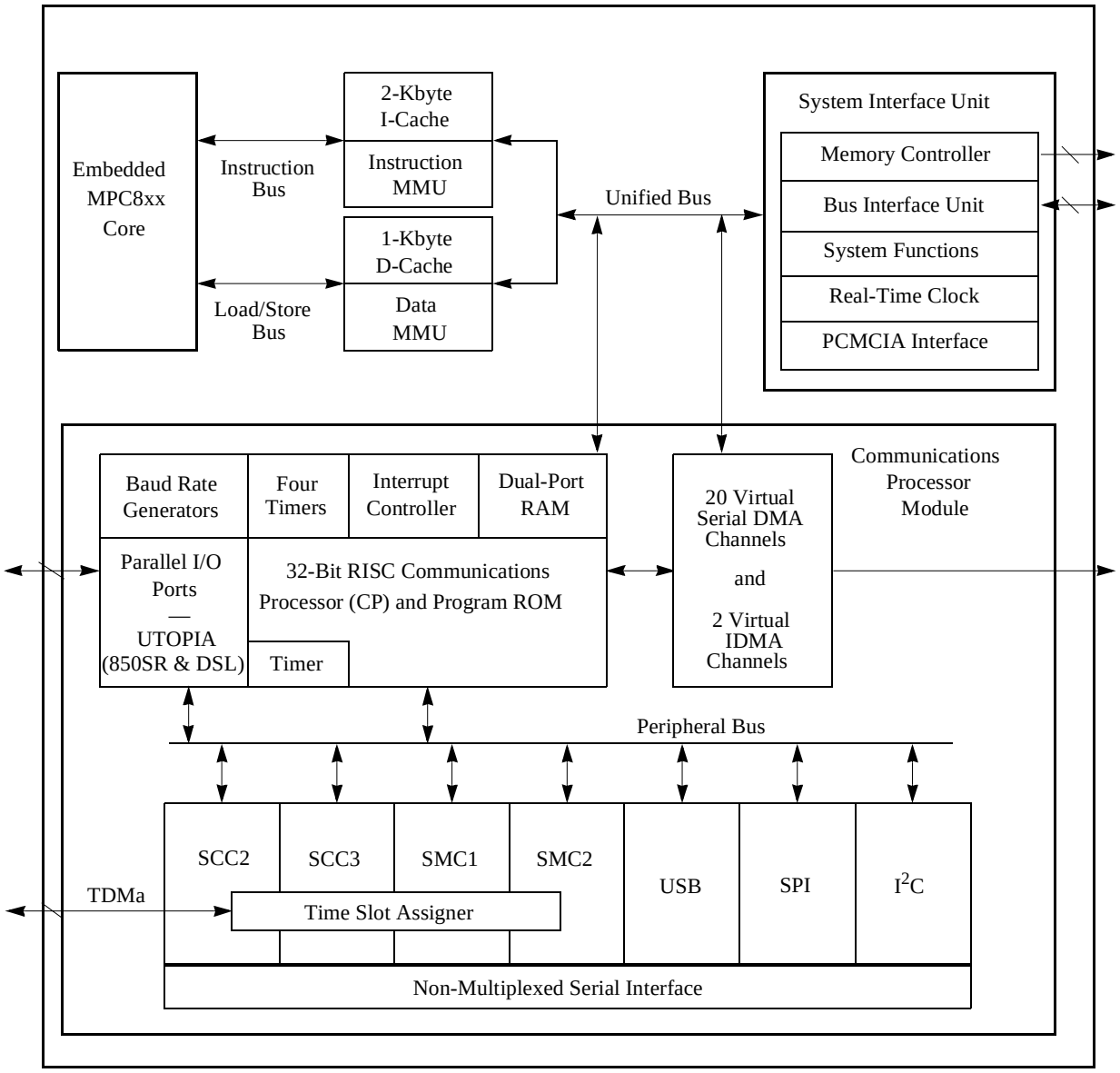

Figure 1. MPC850 Microprocessor Block Diagram

The following list summarizes the main features of the MPC850:

- Embedded single-issue, 32-bit MPC8xx core (implementing the PowerPC architecture) with thirty-two 32-bit general-purpose registers (GPRs)
  - Performs branch folding and branch prediction with conditional prefetch, but without conditional execution

  - 2-Kbyte instruction cache and 1-Kbyte data cache (Harvard architecture)
    - Caches are two-way, set-associative
    - Physically addressed
    - Cache blocks can be updated with a 4-word line burst
    - Least-recently used (LRU) replacement algorithm
    - Lockable one-line granularity
  - Memory management units (MMUs) with 8-entry translation lookaside buffers (TLBs) and fully-associative instruction and data TLBs
  - MMUs support multiple page sizes of 4 Kbytes, 16 Kbytes, 256 Kbytes, 512 Kbytes, and 8 Mbytes; 16 virtual address spaces and eight protection groups
- Advanced on-chip emulation debug mode
- Data bus dynamic bus sizing for 8, 16, and 32-bit buses
  - Supports traditional 68000 big-endian, traditional x86 little-endian and modified little-endian memory systems
  - Twenty-six external address lines
- Completely static design (0–80 MHz operation)
- System integration unit (SIU)
  - Hardware bus monitor
  - Spurious interrupt monitor
  - Software watchdog
  - Periodic interrupt timer
  - Low-power stop mode
  - Clock synthesizer
  - Decrementer, time base, and real-time clock (RTC) from the PowerPC architecture
  - Reset controller
  - IEEE 1149.1 test access port (JTAG)
- Memory controller (eight banks)
  - Glueless interface to DRAM single in-line memory modules (SIMMs), synchronous DRAM (SDRAM), static random-access memory (SRAM), electrically programmable read-only memory (EPROM), flash EPROM, etc.
  - Memory controller programmable to support most size and speed memory interfaces
  - Boot chip-select available at reset (options for 8, 16, or 32-bit memory)
  - Variable block sizes, 32 Kbytes to 256 Mbytes
  - Selectable write protection
  - On-chip bus arbiter supports one external bus master
  - Special features for burst mode support
- General-purpose timers
  - Four 16-bit timers or two 32-bit timers

  - Gate mode can enable/disable counting
  - Interrupt can be masked on reference match and event capture
- Interrupts
  - Eight external interrupt request (IRQ) lines
  - Twelve port pins with interrupt capability
  - Fifteen internal interrupt sources
  - Programmable priority among SCCs and USB
  - Programmable highest-priority request
- Single socket PCMCIA-ATA interface
  - Master (socket) interface, release 2.1 compliant
  - Single PCMCIA socket
  - Supports eight memory or I/O windows
- Communications processor module (CPM)
  - 32-bit, Harvard architecture, scalar RISC communications processor (CP)
  - Protocol-specific command sets (for example, GRACEFUL STOP TRANSMIT stops transmission after the current frame is finished or immediately if no frame is being sent and CLOSE RXBD closes the receive buffer descriptor)
  - Supports continuous mode transmission and reception on all serial channels
  - Up to 8 Kbytes of dual-port RAM
  - Twenty serial DMA (SDMA) channels for the serial controllers, including eight for the four USB endpoints
  - Three parallel I/O registers with open-drain capability
- Four independent baud-rate generators (BRGs)
  - Can be connected to any SCC, SMC, or USB
  - Allow changes during operation
  - Autobaud support option
- Two SCCs (serial communications controllers)
  - Ethernet/IEEE 802.3, supporting full 10-Mbps operation
  - HDLC/SDLC™ (all channels supported at 2 Mbps)
  - HDLC bus (implements an HDLC-based local area network (LAN))
  - Asynchronous HDLC to support PPP (point-to-point protocol)
  - AppleTalk®
  - Universal asynchronous receiver transmitter (UART)
  - Synchronous UART
  - Serial infrared (IrDA)
  - Totally transparent (bit streams)
  - Totally transparent (frame based with optional cyclic redundancy check (CRC))

- QUICC multichannel controller (QMC) microcode features
  - Up to 64 independent communication channels on a single SCC
  - Arbitrary mapping of 0–31 channels to any of 0–31 TDM time slots
  - Supports either transparent or HDLC protocols for each channel
  - Independent TxBDs/Rx and event/interrupt reporting for each channel
- One universal serial bus controller (USB)
  - Supports host controller and slave modes at 1.5 Mbps and 12 Mbps
- Two serial management controllers (SMCs)
  - UART
  - Transparent
  - General circuit interface (GCI) controller
  - Can be connected to the time-division-multiplexed (TDM) channel
- One serial peripheral interface (SPI)
  - Supports master and slave modes
  - Supports multimaster operation on the same bus
- One $I^2C^{®}$ (interprocessor-integrated circuit) port
  - Supports master and slave modes
  - Supports multimaster environment
- Time slot assigner
  - Allows SCCs and SMCs to run in multiplexed operation
  - Supports T1, CEPT, PCM highway, ISDN basic rate, ISDN primary rate, user-defined
  - 1- or 8-bit resolution
  - Allows independent transmit and receive routing, frame syncs, clocking
  - Allows dynamic changes
  - Can be internally connected to four serial channels (two SCCs and two SMCs)
- Low-power support
  - Full high: all units fully powered at high clock frequency
  - Full low: all units fully powered at low clock frequency
  - Doze: core functional units disabled except time base, decrementer, PLL, memory controller, real-time clock, and CPM in low-power standby
  - Sleep: all units disabled except real-time clock and periodic interrupt timer. PLL is active for fast wake-up
  - Deep sleep: all units disabled including PLL, except the real-time clock and periodic interrupt timer
  - Low-power stop: to provide lower power dissipation

  - Separate power supply input to operate internal logic at 2.2 V when operating at or below 25 MHz
  - Can be dynamically shifted between high frequency (3.3 V internal) and low frequency (2.2 V internal) operation
- Debug interface
  - Eight comparators: four operate on instruction address, two operate on data address, and two operate on data
  - The MPC850 can compare using the =, ≠, <, and > conditions to generate watchpoints
  - Each watchpoint can generate a breakpoint internally
- 3.3-V operation with 5-V TTL compatibility on all general purpose I/O pins.

3 Electrical and Thermal Characteristics

This section provides the AC and DC electrical specifications and thermal characteristics for the MPC850. Table 2 provides the maximum ratings.

Table 2. Maximum Ratings

(GND = 0V)

Rating	Symbol	Value	Unit
Supply voltage	VDDH	-0.3 to 4.0	V
	VDDL	-0.3 to 4.0	V
	KAPWR	-0.3 to 4.0	V
	VDDSYN	-0.3 to 4.0	V
Input voltage [1]	V_{in}	GND-0.3 to VDDH + 2.5 V	V
Junction temperature [2]	T_j	0 to 95 (standard) -40 to 95 (extended)	°C
Storage temperature range	T_{stg}	-55 to +150	°C

1 Functional operating conditions are provided with the DC electrical specifications in Table 5. Absolute maximum ratings are stress ratings only; functional operation at the maxima is not guaranteed. Stress beyond those listed may affect device reliability or cause permanent damage to the device.
CAUTION: All inputs that tolerate 5 V cannot be more than 2.5 V greater than the supply voltage. This restriction applies to power-up and normal operation (that is, if the MPC850 is unpowered, voltage greater than 2.5 V must not be applied to its inputs).

2 The MPC850, a high-frequency device in a BGA package, does not provide a guaranteed maximum ambient temperature. Only maximum junction temperature is guaranteed. It is the responsibility of the user to consider power dissipation and thermal management. Junction temperature ratings are the same regardless of frequency rating of the device.

This device contains circuitry protecting against damage due to high-static voltage or electrical fields; however, it is advised that normal precautions be taken to avoid application of any voltages higher than maximum-rated voltages to this high-impedance circuit. Reliability of operation is enhanced if unused inputs are tied to an appropriate logic voltage level (for example, either GND or V_{CC}). Table 3 provides the package thermal characteristics for the MPC850.

4 Thermal Characteristics

Table 3 shows the thermal characteristics for the MPC850.

Table 3. Thermal Characteristics

Characteristic	Symbol	Value	Unit
Thermal resistance for BGA [1]	θ_{JA}	40 [2]	°C/W
	θ_{JA}	31 [3]	°C/W
	θ_{JA}	24 [4]	°C/W
Thermal Resistance for BGA (junction-to-case)	θ_{JC}	8	°C/W

[1] For more information on the design of thermal vias on multilayer boards and BGA layout considerations in general, refer to AN-1231/D, Plastic Ball Grid Array Application Note available from your local Freescale sales office.

[2] Assumes natural convection and a single layer board (no thermal vias).

[3] Assumes natural convection, a multilayer board with thermal vias[4], 1 watt MPC850 dissipation, and a board temperature rise of 20°C above ambient.

[4] Assumes natural convection, a multilayer board with thermal vias[4], 1 watt MPC850 dissipation, and a board temperature rise of 13°C above ambient.

$T_J = T_A + (P_D \bullet \theta_{JA})$

$P_D = (V_{DD} \bullet I_{DD}) + P_{I/O}$

where:

$P_{I/O}$ is the power dissipation on pins

Table 4 provides power dissipation information.

Table 4. Power Dissipation (P_D)

Characteristic	Frequency (MHz)	Typical [1]	Maximum [2]	Unit
Power Dissipation All Revisions (1:1) Mode	33	TBD	515	mW
	40	TBD	590	mW
	50	TBD	725	mW

[1] Typical power dissipation is measured at 3.3V

[2] Maximum power dissipation is measured at 3.65 V

Table 5 provides the DC electrical characteristics for the MPC850.

Table 5. DC Electrical Specifications

Characteristic	Symbol	Min	Max	Unit
Operating voltage at 40 MHz or less	VDDH, VDDL, KAPWR, VDDSYN	3.0	3.6	V
Operating voltage at 40 MHz or higher	VDDH, VDDL, KAPWR, VDDSYN	3.135	3.465	V
Input high voltage (address bus, data bus, EXTAL, EXTCLK, and all bus control/status signals)	VIH	2.0	3.6	V
Input high voltage (all general purpose I/O and peripheral pins)	VIH	2.0	5.5	V

Table 5. DC Electrical Specifications (continued)

Characteristic	Symbol	Min	Max	Unit
Input low voltage	VIL	GND	0.8	V
EXTAL, EXTCLK input high voltage	VIHC	0.7*(VCC)	VCC+0.3	V
Input leakage current, Vin = 5.5 V (Except TMS, TRST, DSCK and DSDI pins)	I_{in}	—	100	µA
Input leakage current, Vin = 3.6V (Except TMS, TRST, DSCK and DSDI pins)	I_{In}	—	10	µA
Input leakage current, Vin = 0V (Except TMS, TRST, DSCK and DSDI pins)	I_{In}	—	10	µA
Input capacitance	C_{in}	—	20	pF
Output high voltage, IOH = -2.0 mA, VDDH = 3.0V except XTAL, XFC, and open-drain pins	VOH	2.4	—	V
Output low voltage CLKOUT [3] IOL = 3.2 mA [1] IOL = 5.3 mA [2] IOL = 7.0 mA PA[14]/USBOE, PA[12]/TXD2 IOL = 8.9 mA TS, TA, TEA, BI, BB, HRESET, SRESET	VOL	—	0.5	V

1 A[6:31], TSIZ0/REG, TSIZ1, D[0:31], DP[0:3]/IRQ[3:6], RD/WR, BURST, RSV/IRQ2, IP_B[0:1]/IWP[0:1]/VFLS[0:1], IP_B2/IOIS16_B/AT2, IP_B3/IWP2/VF2, IP_B4/LWP0/VF0, IP_B5/LWP1/VF1, IP_B6/DSDI/AT0, IP_B7/PTR/AT3, PA[15]/USBRXD, PA[13]/RXD2, PA[9]/L1TXDA/SMRXD2, PA[8]/L1RXDA/SMTXD2, PA[7]/CLK1/TIN1/L1RCLKA/BRGO1, PA[6]/CLK2/TOUT1/TIN3, PA[5]/CLK3/TIN2/L1TCLKA/BRGO2, PA[4]/CLK4/TOUT2/TIN4, PB[31]/SPISEL, PB[30]/SPICLK/TXD3, PB[29]/SPIMOSI /RXD3, PB[28]/SPIMISO/BRGO3, PB[27]/I2CSDA/BRGO1, PB[26]/I2CSCL/BRGO2, PB[25]/SMTXD1/TXD3, PB[24]/SMRXD1/RXD3, PB[23]/SMSYN1/SDACK1, PB[22]/SMSYN2/SDACK2, PB[19]/L1ST1, PB[18]/RTS2/L1ST2, PB[17]/L1ST3, PB[16]/L1RQa/L1ST4, PC[15]/DREQ0/L1ST5, PC[14]/DREQ1/RTS2/L1ST6, PC[13]/L1ST7/RTS3, PC[12]/L1RQa/L1ST8, PC[11]/USBRXP, PC[10]/TGATE1/USBRXN, PC[9]/CTS2, PC[8]/CD2/TGATE1, PC[7]/USBTXP, PC[6]/USBTXN, PC[5]/CTS3/L1TSYNCA/SDACK1, PC[4]/CD3/L1RSYNCA, PD[15], PD[14], PD[13], PD[12], PD[11], PD[10], PD[9], PD[8], PD[7], PD[6], PD[5], PD[4], PD[3]

2 BDIP/GPL_B5, BR, BG, FRZ/IRQ6, CS[0:5], CS6/CE1_B, CS7/CE2_B, WE0/BS_AB0/IORD, WE1/BS_AB1/IOWR, WE2/BS_AB2/PCOE, WE3/BS_AB3/PCWE, GPL_A0/GPL_B0, OE/GPL_A1/GPL_B1, GPL_A[2:3]/GPL_B[2:3]/CS[2:3], UPWAITA/GPL_A4/AS, UPWAITB/GPL_B4, GPL_A5, ALE_B/DSCK/AT1, OP2/MODCK1/STS, OP3/MODCK2/DSDO

3 The MPC850 IBIS model must be used to accurately model the behavior of the Clkout output driver for the full and half drive setting. Due to the nature of the Clkout output buffer, IOH and IOL for Clkout should be extracted from the IBIS model at any output voltage level.

5 Power Considerations

The average chip-junction temperature, T_J, in °C can be obtained from the equation:

$T_J = T_A + (P_D \bullet \theta_{JA})(1)$

where

T_A = Ambient temperature, °C

θ_{JA} = Package thermal resistance, junction to ambient, °C/W

$P_D = P_{INT} + P_{I/O}$

$P_{INT} = I_{DD} \times V_{DD}$, watts—chip internal power

$P_{I/O}$ = Power dissipation on input and output pins—user determined

For most applications $P_{I/O} < 0.3 \bullet P_{INT}$ and can be neglected. If $P_{I/O}$ is neglected, an approximate relationship between P_D and T_J is:

$P_D = K \div (T_J + 273°C)$(2)

Solving equations (1) and (2) for K gives:

$K = P_D \bullet (T_A + 273°C) + \theta_{JA} \bullet P_D^2$(3)

where K is a constant pertaining to the particular part. K can be determined from equation (3) by measuring P_D (at equilibrium) for a known T_A. Using this value of K, the values of P_D and T_J can be obtained by solving equations (1) and (2) iteratively for any value of T_A.

5.1 Layout Practices

Each V_{CC} pin on the MPC850 should be provided with a low-impedance path to the board's supply. Each GND pin should likewise be provided with a low-impedance path to ground. The power supply pins drive distinct groups of logic on chip. The V_{CC} power supply should be bypassed to ground using at least four 0.1 µF by-pass capacitors located as close as possible to the four sides of the package. The capacitor leads and associated printed circuit traces connecting to chip V_{CC} and GND should be kept to less than half an inch per capacitor lead. A four-layer board is recommended, employing two inner layers as V_{CC} and GND planes.

All output pins on the MPC850 have fast rise and fall times. Printed circuit (PC) trace interconnection length should be minimized in order to minimize undershoot and reflections caused by these fast output switching times. This recommendation particularly applies to the address and data busses. Maximum PC trace lengths of six inches are recommended. Capacitance calculations should consider all device loads as well as parasitic capacitances due to the PC traces. Attention to proper PCB layout and bypassing becomes especially critical in systems with higher capacitive loads because these loads create higher transient currents in the V_{CC} and GND circuits. Pull up all unused inputs or signals that will be inputs during reset. Special care should be taken to minimize the noise levels on the PLL supply pins.

6 Bus Signal Timing

Table 6 provides the bus operation timing for the MPC850 at 50 MHz, 66 MHz, and 80 MHz. Timing information for other bus speeds can be interpolated by equation using the MPC850 Electrical Specifications Spreadsheet found at http://www.mot.com/netcomm.

The maximum bus speed supported by the MPC850 is 50 MHz. Higher-speed parts must be operated in half-speed bus mode (for example, an MPC850 used at 66 MHz must be configured for a 33 MHz bus).

The timing for the MPC850 bus shown assumes a 50-pF load. This timing can be derated by 1 ns per 10 pF. Derating calculations can also be performed using the MPC850 Electrical Specifications Spreadsheet.

Table 6. Bus Operation Timing [1]

Num	Characteristic	50 MHz		66 MHz		80 MHz		FFACT	Cap Load (default 50 pF)	Unit
		Min	Max	Min	Max	Min	Max			
B1	CLKOUT period	20	—	30.30	—	25	—	—	—	ns
B1a	EXTCLK to CLKOUT phase skew (EXTCLK > 15 MHz and MF <= 2)	-0.90	0.90	-0.90	0.90	-0.90	0.90	—	50.00	ns
B1b	EXTCLK to CLKOUT phase skew (EXTCLK > 10 MHz and MF < 10)	-2.30	2.30	-2.30	2.30	-2.30	2.30	—	50.00	ns
B1c	CLKOUT phase jitter (EXTCLK > 15 MHz and MF <= 2) [2]	-0.60	0.60	-0.60	0.60	-0.60	0.60	—	50.00	ns
B1d	CLKOUT phase jitter [2]	-2.00	2.00	-2.00	2.00	-2.00	2.00	—	50.00	ns
B1e	CLKOUT frequency jitter (MF < 10) [2]	—	0.50	—	0.50	—	0.50	—	50.00	%
B1f	CLKOUT frequency jitter (10 < MF < 500) [2]	—	2.00	—	2.00	—	2.00	—	50.00	%
B1g	CLKOUT frequency jitter (MF > 500) [2]	—	3.00	—	3.00	—	3.00	—	50.00	%
B1h	Frequency jitter on EXTCLK [3]	—	0.50	—	0.50	—	0.50	—	50.00	%
B2	CLKOUT pulse width low	8.00	—	12.12	—	10.00	—	—	50.00	ns
B3	CLKOUT width high	8.00	—	12.12	—	10.00	—	—	50.00	ns
B4	CLKOUT rise time	—	4.00	—	4.00	—	4.00	—	50.00	ns
B5	CLKOUT fall time	—	4.00	—	4.00	—	4.00	—	50.00	ns
B7	CLKOUT to A[6–31], RD/$\overline{WR}$, $\overline{BURST}$, D[0–31], DP[0–3] invalid	5.00	—	7.58	—	6.25	—	0.250	50.00	ns
B7a	CLKOUT to TSIZ[0–1], $\overline{REG}$, $\overline{RSV}$, AT[0–3], $\overline{BDIP}$, $\overline{PTR}$ invalid	5.00	—	7.58	—	6.25	—	0.250	50.00	ns
B7b	CLKOUT to $\overline{BR}$, $\overline{BG}$, FRZ, VFLS[0–1], VF[0–2] IWP[0–2], LWP[0–1], $\overline{STS}$ invalid [4]	5.00	—	7.58	—	6.25	—	0.250	50.00	ns
B8	CLKOUT to A[6–31], RD/$\overline{WR}$, $\overline{BURST}$, D[0–31], DP[0–3] valid	5.00	11.75	7.58	14.33	6.25	13.00	0.250	50.00	ns
B8a	CLKOUT to TSIZ[0–1], $\overline{REG}$, $\overline{RSV}$, AT[0–3] $\overline{BDIP}$, $\overline{PTR}$ valid	5.00	11.75	7.58	14.33	6.25	13.00	0.250	50.00	ns
B8b	CLKOUT to $\overline{BR}$, $\overline{BG}$, VFLS[0–1], VF[0–2], IWP[0–2], FRZ, LWP[0–1], $\overline{STS}$ valid [4]	5.00	11.74	7.58	14.33	6.25	13.00	0.250	50.00	ns

Table 6. Bus Operation Timing [1] (continued)

Num	Characteristic	50 MHz		66 MHz		80 MHz		FFACT	Cap Load (default 50 pF)	Unit
		Min	Max	Min	Max	Min	Max			
B9	CLKOUT to A[6–31] RD/$\overline{WR}$, $\overline{BURST}$, D[0–31], DP[0–3], $\overline{TSIZ}$[0–1], $\overline{REG}$, $\overline{RSV}$, AT[0–3], $\overline{PTR}$ high-Z	5.00	11.75	7.58	14.33	6.25	13.00	0.250	50.00	ns
B11	CLKOUT to $\overline{TS}$, $\overline{BB}$ assertion	5.00	11.00	7.58	13.58	6.25	12.25	0.250	50.00	ns
B11a	CLKOUT to $\overline{TA}$, $\overline{BI}$ assertion, (When driven by the memory controller or PCMCIA interface)	2.50	9.25	2.50	9.25	2.50	9.25	—	50.00	ns
B12	CLKOUT to $\overline{TS}$, $\overline{BB}$ negation	5.00	11.75	7.58	14.33	6.25	13.00	0.250	50.00	ns
B12a	CLKOUT to $\overline{TA}$, $\overline{BI}$ negation (when driven by the memory controller or PCMCIA interface)	2.50	11.00	2.50	11.00	2.50	11.00	—	50.00	ns
B13	CLKOUT to $\overline{TS}$, $\overline{BB}$ high-Z	5.00	19.00	7.58	21.58	6.25	20.25	0.250	50.00	ns
B13a	CLKOUT to $\overline{TA}$, $\overline{BI}$ high-Z, (when driven by the memory controller or PCMCIA interface)	2.50	15.00	2.50	15.00	2.50	15.00	—	50.00	ns
B14	CLKOUT to $\overline{TEA}$ assertion	2.50	10.00	2.50	10.00	2.50	10.00	—	50.00	ns
B15	CLKOUT to $\overline{TEA}$ high-Z	2.50	15.00	2.50	15.00	2.50	15.00	—	50.00	ns
B16	$\overline{TA}$, $\overline{BI}$ valid to CLKOUT(setup time) [5]	9.75	—	9.75	—	9.75	—	—	50.00	ns
B16a	$\overline{TEA}$, $\overline{KR}$, $\overline{RETRY}$, valid to CLKOUT (setup time) [5]	10.00	—	10.00	—	10.00	—	—	50.00	ns
B16b	$\overline{BB}$, $\overline{BG}$, $\overline{BR}$ valid to CLKOUT (setup time) [6]	8.50	—	8.50	—	8.50	—	—	50.00	ns
B17	CLKOUT to $\overline{TA}$, $\overline{TEA}$, $\overline{BI}$, $\overline{BB}$, $\overline{BG}$, $\overline{BR}$ valid (Hold time).[5]	1.00	—	1.00	—	1.00	—	—	50.00	ns
B17a	CLKOUT to $\overline{KR}$, $\overline{RETRY}$, except $\overline{TEA}$ valid (hold time)	2.00	—	2.00	—	2.00	—	—	50.00	ns
B18	D[0–31], DP[0–3] valid to CLKOUT rising edge (setup time) [7]	6.00	—	6.00	—	6.00	—	—	50.00	ns
B19	CLKOUT rising edge to D[0–31], DP[0–3] valid (hold time) [7]	1.00	—	1.00	—	1.00	—	—	50.00	ns
B20	D[0–31], DP[0–3] valid to CLKOUT falling edge (setup time) [8]	4.00	—	4.00	—	4.00	—	—	50.00	ns
B21	CLKOUT falling edge to D[0–31], DP[0–3] valid (hold time) [8]	2.00	—	2.00	—	2.00	—	—	—	—

Table 6. Bus Operation Timing [1] (continued)

Num	Characteristic	50 MHz		66 MHz		80 MHz		FFACT	Cap Load (default 50 pF)	Unit
		Min	Max	Min	Max	Min	Max			
B22	CLKOUT rising edge to $\overline{CS}$ asserted GPCM ACS = 00	5.00	11.75	7.58	14.33	6.25	13.00	0.250	50.00	ns
B22a	CLKOUT falling edge to $\overline{CS}$ asserted GPCM ACS = 10, TRLX = 0,1	—	8.00	—	8.00	—	8.00	—	50.00	ns
B22b	CLKOUT falling edge to $\overline{CS}$ asserted GPCM ACS = 11, TRLX = 0, EBDF = 0	5.00	11.75	7.58	14.33	6.25	13.00	0.250	50.00	ns
B22c	CLKOUT falling edge to $\overline{CS}$ asserted GPCM ACS = 11, TRLX = 0, EBDF = 1	7.00	14.00	11.00	18.00	9.00	16.00	0.375	50.00	ns
B23	CLKOUT rising edge to $\overline{CS}$ negated GPCM read access, GPCM write access ACS = 00, TRLX = 0 & CSNT = 0	2.00	8.00	2.00	8.00	2.00	8.00	—	50.00	ns
B24	A[6–31] to $\overline{CS}$ asserted GPCM ACS = 10, TRLX = 0.	3.00	—	6.00	—	4.00	—	0.250	50.00	ns
B24a	A[6–31] to $\overline{CS}$ asserted GPCM ACS = 11, TRLX = 0	8.00	—	13.00	—	11.00	—	0.500	50.00	ns
B25	CLKOUT rising edge to $\overline{OE}$, $\overline{WE[0–3]}$ asserted	—	9.00	—	9.00	—	9.00	—	50.00	ns
B26	CLKOUT rising edge to $\overline{OE}$ negated	2.00	9.00	2.00	9.00	2.00	9.00	—	50.00	ns
B27	A[6–31] to $\overline{CS}$ asserted GPCM ACS = 10, TRLX = 1	23.00	—	36.00	—	29.00	—	1.250	50.00	ns
B27a	A[6–31] to $\overline{CS}$ asserted GPCM ACS = 11, TRLX = 1	28.00	—	43.00	—	36.00	—	1.500	50.00	ns
B28	CLKOUT rising edge to $\overline{WE[0–3]}$ negated GPCM write access CSNT = 0	—	9.00	—	9.00	—	9.00	—	50.00	ns
B28a	CLKOUT falling edge to $\overline{WE[0–3]}$ negated GPCM write access TRLX = 0,1 CSNT = 1, EBDF = 0	5.00	12.00	8.00	14.00	6.00	13.00	0.250	50.00	ns
B28b	CLKOUT falling edge to $\overline{CS}$ negated GPCM write access TRLX = 0,1 CSNT = 1, ACS = 10 or ACS = 11, EBDF = 0	—	12.00	—	14.00	—	13.00	0.250	50.00	ns

Table 6. Bus Operation Timing [1] (continued)

Num	Characteristic	50 MHz		66 MHz		80 MHz		FFACT	Cap Load (default 50 pF)	Unit
		Min	Max	Min	Max	Min	Max			
B28c	CLKOUT falling edge to $\overline{\text{WE[0–3]}}$ negated GPCM write access TRLX = 0,1 CSNT = 1 write access TRLX = 0, CSNT = 1, EBDF = 1	7.00	14.00	11.00	18.00	9.00	16.00	0.375	50.00	ns
B28d	CLKOUT falling edge to $\overline{\text{CS}}$ negated GPCM write access TRLX = 0,1 CSNT = 1, ACS = 10 or ACS = 11, EBDF = 1	—	14.00	—	18.00	—	16.00	0.375	50.00	ns
B29	$\overline{\text{WE[0–3]}}$ negated to D[0–31], DP[0–3] high-Z GPCM write access, CSNT = 0	3.00	—	6.00	—	4.00	—	0.250	50.00	ns
B29a	$\overline{\text{WE[0–3]}}$ negated to D[0–31], DP[0–3] high-Z GPCM write access, TRLX = 0 CSNT = 1, EBDF = 0	8.00	—	13.00	—	11.00	—	0.500	50.00	ns
B29b	$\overline{\text{CS}}$ negated to D[0–31], DP[0–3], high-Z GPCM write access, ACS = 00, TRLX = 0 & CSNT = 0	3.00	—	6.00	—	4.00	—	0.250	50.00	ns
B29c	$\overline{\text{CS}}$ negated to D[0–31], DP[0–3] high-Z GPCM write access, TRLX = 0, CSNT = 1, ACS = 10 or ACS = 11, EBDF = 0	8.00	—	13.00	—	11.00	—	0.500	50.00	ns
B29d	$\overline{\text{WE[0–3]}}$ negated to D[0–31], DP[0–3] high-Z GPCM write access, TRLX = 1, CSNT = 1, EBDF = 0	28.00	—	43.00	—	36.00	—	1.500	50.00	ns
B29e	$\overline{\text{CS}}$ negated to D[0–31], DP[0–3] high-Z GPCM write access, TRLX = 1, CSNT = 1, ACS = 10 or ACS = 11, EBDF = 0	28.00	—	43.00	—	36.00	—	1.500	50.00	ns
B29f	$\overline{\text{WE[0–3]}}$ negated to D[0–31], DP[0–3] high-Z GPCM write access TRLX = 0, CSNT = 1, EBDF = 1	5.00	—	9.00	—	7.00	—	0.375	50.00	ns
B29g	$\overline{\text{CS}}$ negated to D[0–31], DP[0–3] high-Z GPCM write access TRLX = 0, CSNT = 1, ACS = 10 or ACS = 11, EBDF = 1	5.00	—	9.00	—	7.00	—	0.375	50.00	ns

Table 6. Bus Operation Timing [1] (continued)

Num	Characteristic	50 MHz		66 MHz		80 MHz		FFACT	Cap Load (default 50 pF)	Unit
		Min	Max	Min	Max	Min	Max			
B29h	$\overline{WE}$[0–3] negated to D[0–31], DP[0–3] high-Z GPCM write access TRLX = 0, CSNT = 1, EBDF = 1	25.00	—	39.00	—	31.00	—	1.375	50.00	ns
B29i	$\overline{CS}$ negated to D[0–31], DP[0–3] high-Z GPCM write access, TRLX = 1, CSNT = 1, ACS = 10 or ACS = 11, EBDF = 1	25.00	—	39.00	—	31.00	—	1.375	50.00	ns
B30	$\overline{CS}$, $\overline{WE}$[0–3] negated to A[6–31] invalid GPCM write access [9]	3.00	—	6.00	—	4.00	—	0.250	50.00	ns
B30a	$\overline{WE}$[0–3] negated to A[6–31] invalid GPCM write access, TRLX = 0, CSNT = 1, $\overline{CS}$ negated to A[6–31] invalid GPCM write access TRLX = 0, CSNT =1, ACS = 10 or ACS = 11, EBDF = 0	8.00	—	13.00	—	11.00	—	0.500	50.00	ns
B30b	$\overline{WE}$[0–3] negated to A[6–31] invalid GPCM write access, TRLX = 1, CSNT = 1. $\overline{CS}$ negated to A[6–31] Invalid GPCM write access TRLX = 1, CSNT = 1, ACS = 10 or ACS = 11, EBDF = 0	28.00	—	43.00	—	36.00	—	1.500	50.00	ns
B30c	$\overline{WE}$[0–3] negated to A[6–31] invalid GPCM write access, TRLX = 0, CSNT = 1. $\overline{CS}$ negated to A[6–31] invalid GPCM write access, TRLX = 0, CSNT = 1, ACS = 10 or ACS = 11, EBDF = 1	5.00	—	8.00	—	6.00	—	0.375	50.00	ns
B30d	$\overline{WE}$[0–3] negated to A[6–31] invalid GPCM write access TRLX = 1, CSNT =1, $\overline{CS}$ negated to A[6–31] invalid GPCM write access TRLX = 1, CSNT = 1, ACS = 10 or ACS = 11, EBDF = 1	25.00	—	39.00	—	31.00	—	1.375	50.00	ns

Table 6. Bus Operation Timing [1] (continued)

Num	Characteristic	50 MHz		66 MHz		80 MHz		FFACT	Cap Load (default 50 pF)	Unit
		Min	Max	Min	Max	Min	Max			
B31	CLKOUT falling edge to $\overline{CS}$ valid - as requested by control bit CST4 in the corresponding word in the UPM	1.50	6.00	1.50	6.00	1.50	6.00	—	50.00	ns
B31a	CLKOUT falling edge to $\overline{CS}$ valid - as requested by control bit CST1 in the corresponding word in the UPM	5.00	12.00	8.00	14.00	6.00	13.00	0.250	50.00	ns
B31b	CLKOUT rising edge to $\overline{CS}$ valid - as requested by control bit CST2 in the corresponding word in the UPM	1.50	8.00	1.50	8.00	1.50	8.00	—	50.00	ns
B31c	CLKOUT rising edge to $\overline{CS}$ valid - as requested by control bit CST3 in the corresponding word in the UPM	5.00	12.00	8.00	14.00	6.00	13.00	0.250	50.00	ns
B31d	CLKOUT falling edge to $\overline{CS}$ valid - as requested by control bit CST1 in the corresponding word in the UPM EBDF = 1	9.00	14.00	13.00	18.00	11.00	16.00	0.375	50.00	ns
B32	CLKOUT falling edge to $\overline{BS}$ valid - as requested by control bit BST4 in the corresponding word in the UPM	1.50	6.00	1.50	6.00	1.50	6.00	—	50.00	ns
B32a	CLKOUT falling edge to $\overline{BS}$ valid - as requested by control bit BST1 in the corresponding word in the UPM, EBDF = 0	5.00	12.00	8.00	14.00	6.00	13.00	0.250	50.00	ns
B32b	CLKOUT rising edge to $\overline{BS}$ valid - as requested by control bit BST2 in the corresponding word in the UPM	1.50	8.00	1.50	8.00	1.50	8.00	—	50.00	ns
B32c	CLKOUT rising edge to $\overline{BS}$ valid - as requested by control bit BST3 in the corresponding word in the UPM	5.00	12.00	8.00	14.00	6.00	13.00	0.250	50.00	ns
B32d	CLKOUT falling edge to $\overline{BS}$ valid - as requested by control bit BST1 in the corresponding word in the UPM, EBDF = 1	9.00	14.00	13.00	18.00	11.00	16.00	0.375	50.00	ns
B33	CLKOUT falling edge to GPL valid - as requested by control bit GxT4 in the corresponding word in the UPM	1.50	6.00	1.50	6.00	1.50	6.00	—	50.00	ns

Table 6. Bus Operation Timing [1] (continued)

Num	Characteristic	50 MHz		66 MHz		80 MHz		FFACT	Cap Load (default 50 pF)	Unit
		Min	Max	Min	Max	Min	Max			
B33a	CLKOUT rising edge to GPL valid - as requested by control bit GxT3 in the corresponding word in the UPM	5.00	12.00	8.00	14.00	6.00	13.00	0.250	50.00	ns
B34	A[6–31] and D[0–31] to $\overline{CS}$ valid - as requested by control bit CST4 in the corresponding word in the UPM	3.00	—	6.00	—	4.00	—	0.250	50.00	ns
B34a	A[6–31] and D[0–31] to $\overline{CS}$ valid - as requested by control bit CST1 in the corresponding word in the UPM	8.00	—	13.00	—	11.00	—	0.500	50.00	ns
B34b	A[6–31] and D[0–31] to $\overline{CS}$ valid - as requested by CST2 in the corresponding word in UPM	13.00	—	21.00	—	17.00	—	0.750	50.00	ns
B35	A[6–31] to $\overline{CS}$ valid - as requested by control bit BST4 in the corresponding word in UPM	3.00	—	6.00	—	4.00	—	0.250	50.00	ns
B35a	A[6–31] and D[0–31] to $\overline{BS}$ valid - as requested by BST1 in the corresponding word in the UPM	8.00	—	13.00	—	11.00	—	0.500	50.00	ns
B35b	A[6–31] and D[0–31] to $\overline{BS}$ valid - as requested by control bit BST2 in the corresponding word in the UPM	13.00	—	21.00	—	17.00	—	0.750	50.00	ns
B36	A[6–31] and D[0–31] to GPL valid - as requested by control bit GxT4 in the corresponding word in the UPM	3.00	—	6.00	—	4.00	—	0.250	50.00	ns
B37	UPWAIT valid to CLKOUT falling edge [10]	6.00	—	6.00	—	6.00	—	—	50.00	ns
B38	CLKOUT falling edge to UPWAIT valid [10]	1.00	—	1.00	—	1.00	—	—	50.00	ns
B39	$\overline{AS}$ valid to CLKOUT rising edge [11]	7.00	—	7.00	—	7.00	—	—	50.00	ns
B40	A[6–31], TSIZ[0–1], RD/$\overline{WR}$, $\overline{BURST}$, valid to CLKOUT rising edge.	7.00	—	7.00	—	7.00	—	—	50.00	ns
B41	$\overline{TS}$ valid to CLKOUT rising edge (setup time)	7.00	—	7.00	—	7.00	—	—	50.00	ns

Table 6. Bus Operation Timing [1] (continued)

Num	Characteristic	50 MHz		66 MHz		80 MHz		FFACT	Cap Load (default 50 pF)	Unit
		Min	Max	Min	Max	Min	Max			
B42	CLKOUT rising edge to $\overline{TS}$ valid (hold time)	2.00	—	2.00	—	2.00	—	—	50.00	ns
B43	$\overline{AS}$ negation to memory controller signals negation	—	TBD	—	TBD	TBD	—	—	50.00	ns

1 The minima provided assume a 0 pF load, whereas maxima assume a 50pF load. For frequencies not marked on the part, new bus timing must be calculated for all frequency-dependent AC parameters. Frequency-dependent AC parameters are those with an entry in the FFactor column. AC parameters without an FFactor entry do not need to be calculated and can be taken directly from the frequency column corresponding to the frequency marked on the part. The following equations should be used in these calculations.

For a frequency F, the following equations should be applied to each one of the above parameters:

For minima:

$$D = \frac{FFACTOR \times 1000}{F} + (D_{50} - 20 \times FFACTOR)$$

For maxima:

$$D = \frac{FFACTOR \times 1000}{F} + (D_{50} - 20 \times FFACTOR) + 1ns(CAP\ LOAD - 50) / 10$$

where:

D is the parameter value to the frequency required in ns

F is the operation frequency in MHz

D_{50} is the parameter value defined for 50 MHz

CAP LOAD is the capacitance load on the signal in question.

FFACTOR is the one defined for each of the parameters in the table.

2 Phase and frequency jitter performance results are valid only if the input jitter is less than the prescribed value.

3 If the rate of change of the frequency of EXTAL is slow (i.e. it does not jump between the minimum and maximum values in one cycle) or the frequency of the jitter is fast (i.e., it does not stay at an extreme value for a long time) then the maximum allowed jitter on EXTAL can be up to 2%.

4 The timing for $\overline{BR}$ output is relevant when the MPC850 is selected to work with external bus arbiter. The timing for $\overline{BG}$ output is relevant when the MPC850 is selected to work with internal bus arbiter.

5 The setup times required for $\overline{TA}$, $\overline{TEA}$, and $\overline{BI}$ are relevant only when they are supplied by an external device (and not when the memory controller or the PCMCIA interface drives them).

6 The timing required for $\overline{BR}$ input is relevant when the MPC850 is selected to work with the internal bus arbiter. The timing for $\overline{BG}$ input is relevant when the MPC850 is selected to work with the external bus arbiter.

7 The D[0–31] and DP[0–3] input timings B20 and B21 refer to the rising edge of the CLKOUT in which the $\overline{TA}$ input signal is asserted.

8 The D[0:31] and DP[0:3] input timings B20 and B21 refer to the falling edge of CLKOUT. This timing is valid only for read accesses controlled by chip-selects controlled by the UPM in the memory controller, for data beats where DLT3 = 1 in the UPM RAM words. (This is only the case where data is latched on the falling edge of CLKOUT.

9 The timing B30 refers to $\overline{CS}$ when ACS = '00' and to $\overline{WE[0:3]}$ when CSNT = '0'.

10 The signal UPWAIT is considered asynchronous to CLKOUT and synchronized internally. The timings specified in B37 and B38 are specified to enable the freeze of the UPM output signals.

11 The $\overline{AS}$ signal is considered asynchronous to CLKOUT.

Figure 2 is the control timing diagram.

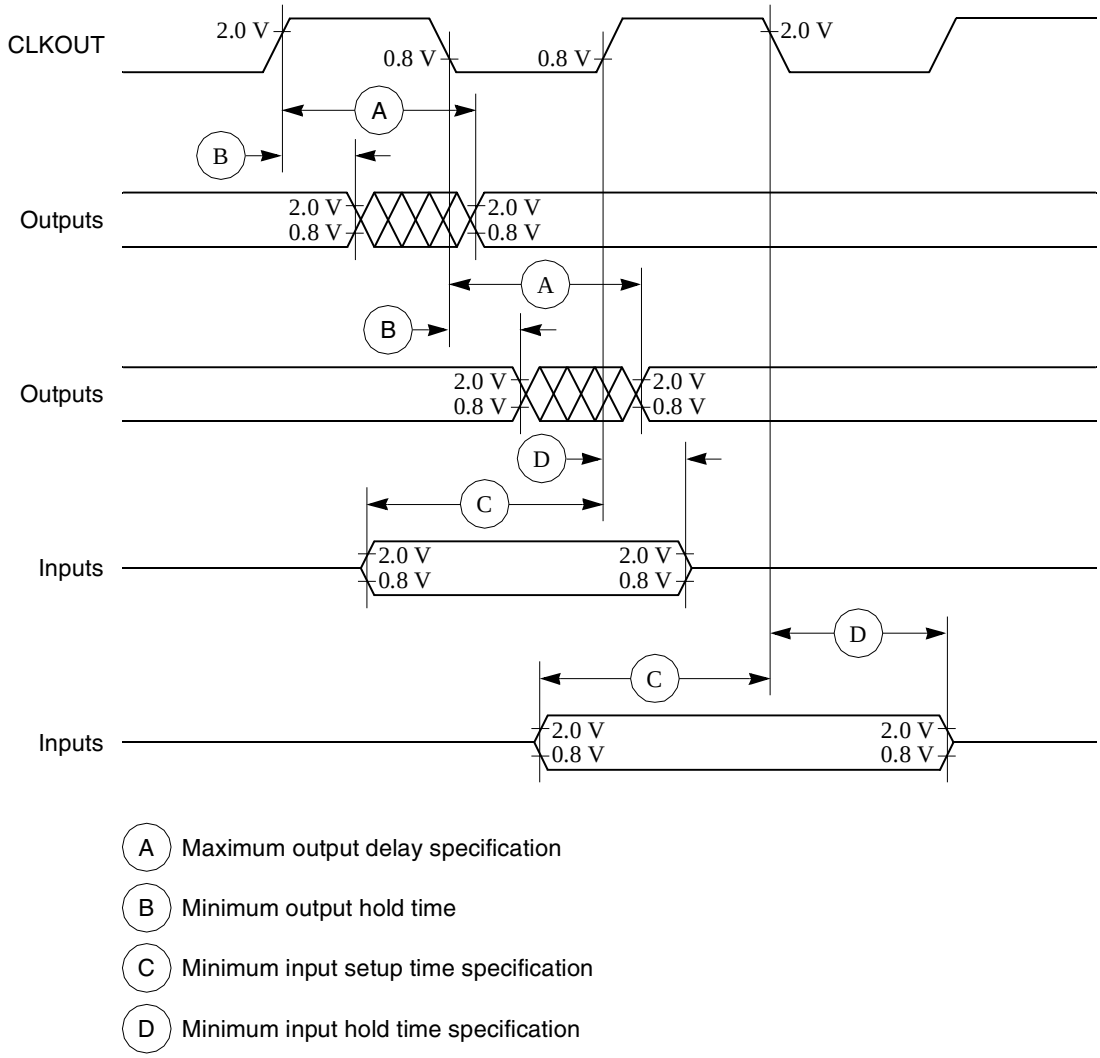

Figure 2. Control Timing

Figure 3 provides the timing for the external clock.

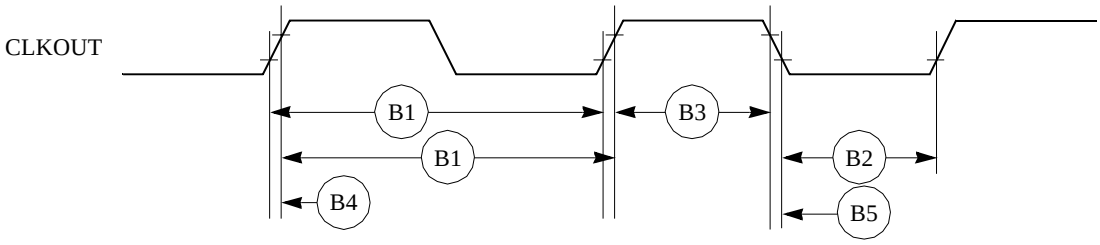

Figure 3. External Clock Timing

Figure 4 provides the timing for the synchronous output signals.

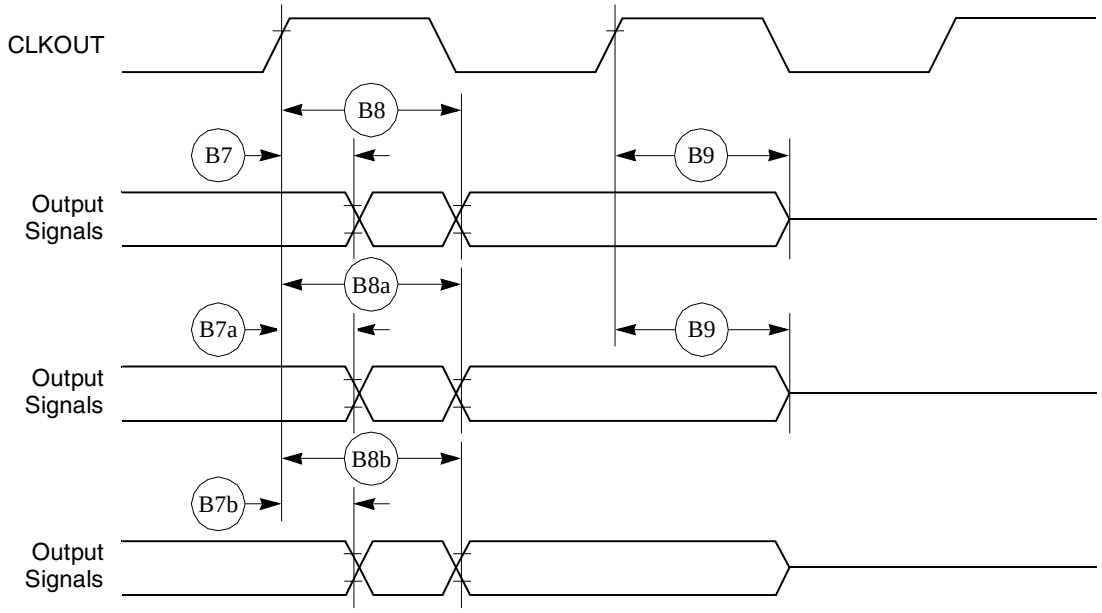

Figure 4. Synchronous Output Signals Timing

Figure 5 provides the timing for the synchronous active pull-up and open-drain output signals.

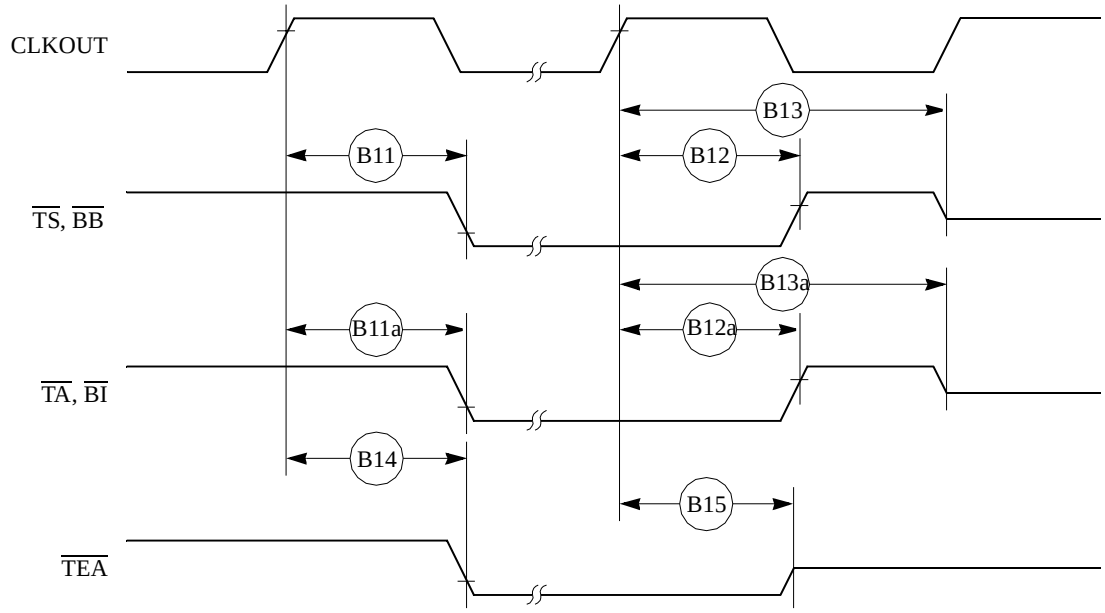

Figure 5. Synchronous Active Pullup and Open-Drain Outputs Signals Timing

Figure 6 provides the timing for the synchronous input signals.

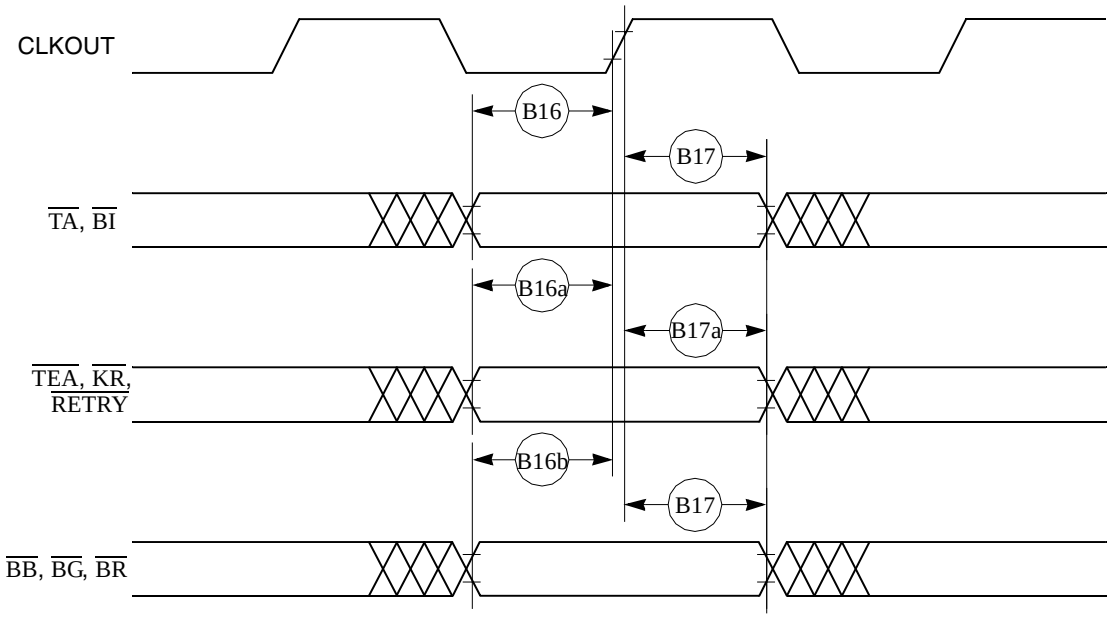

Figure 6. Synchronous Input Signals Timing

Figure 7 provides normal case timing for input data.

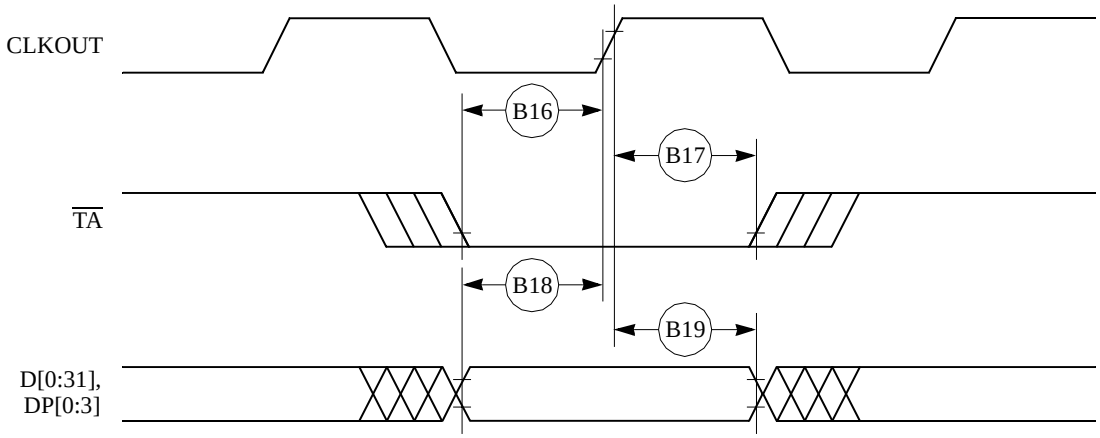

Figure 7. Input Data Timing in Normal Case

Figure 8 provides the timing for the input data controlled by the UPM in the memory controller.

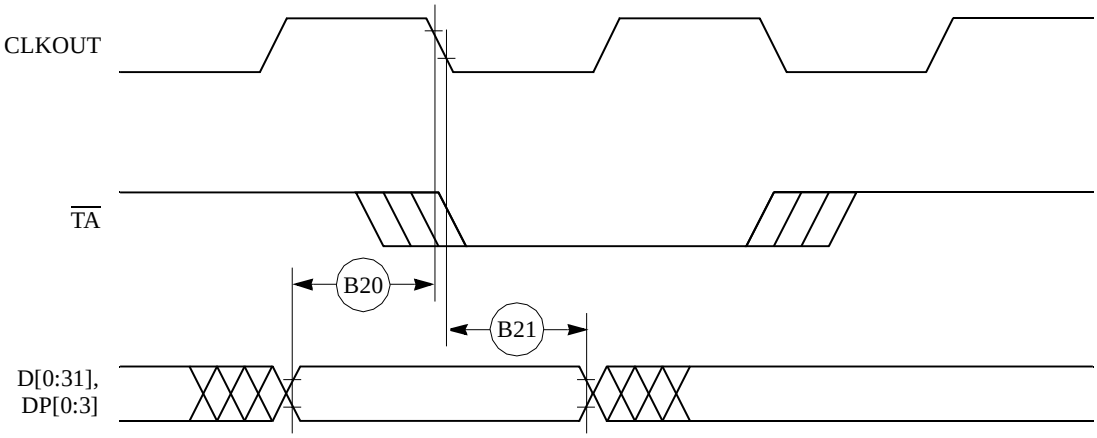

Figure 8. Input Data Timing when Controlled by UPM in the Memory Controller

Figure 9 through Figure 12 provide the timing for the external bus read controlled by various GPCM factors.

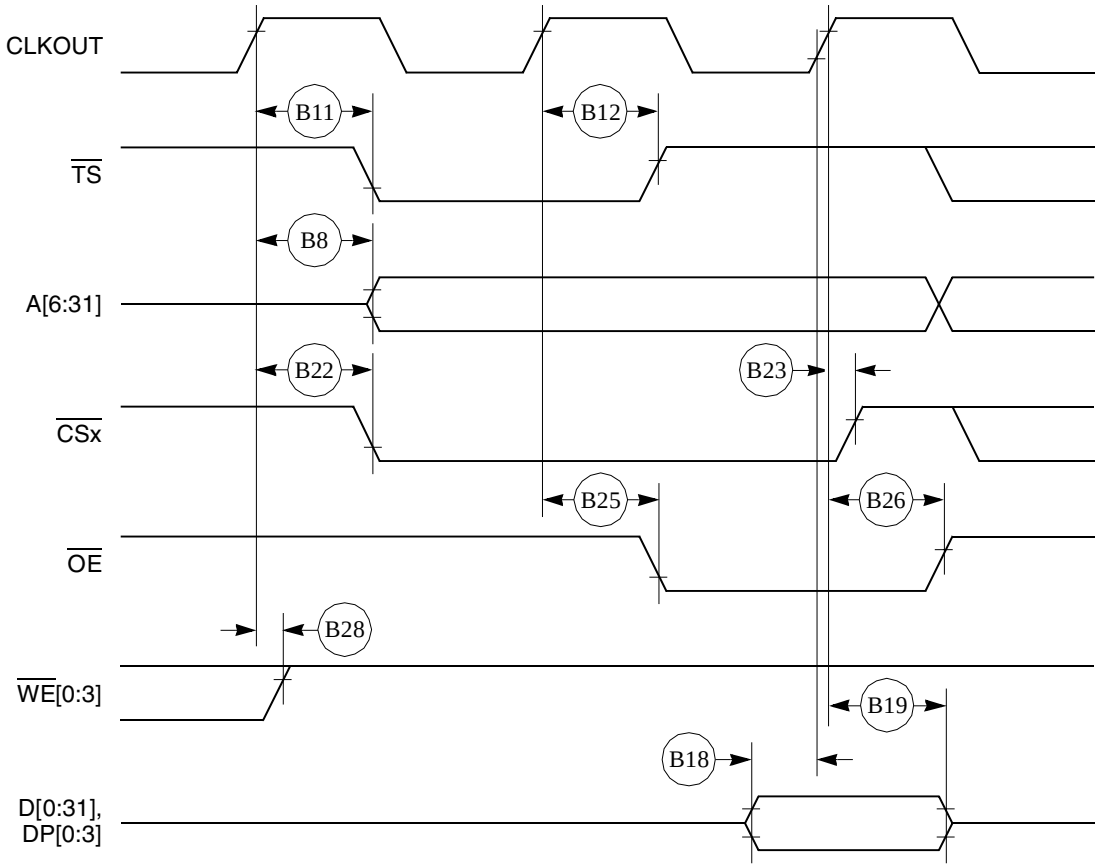

Figure 9. External Bus Read Timing (GPCM Controlled—ACS = 00)

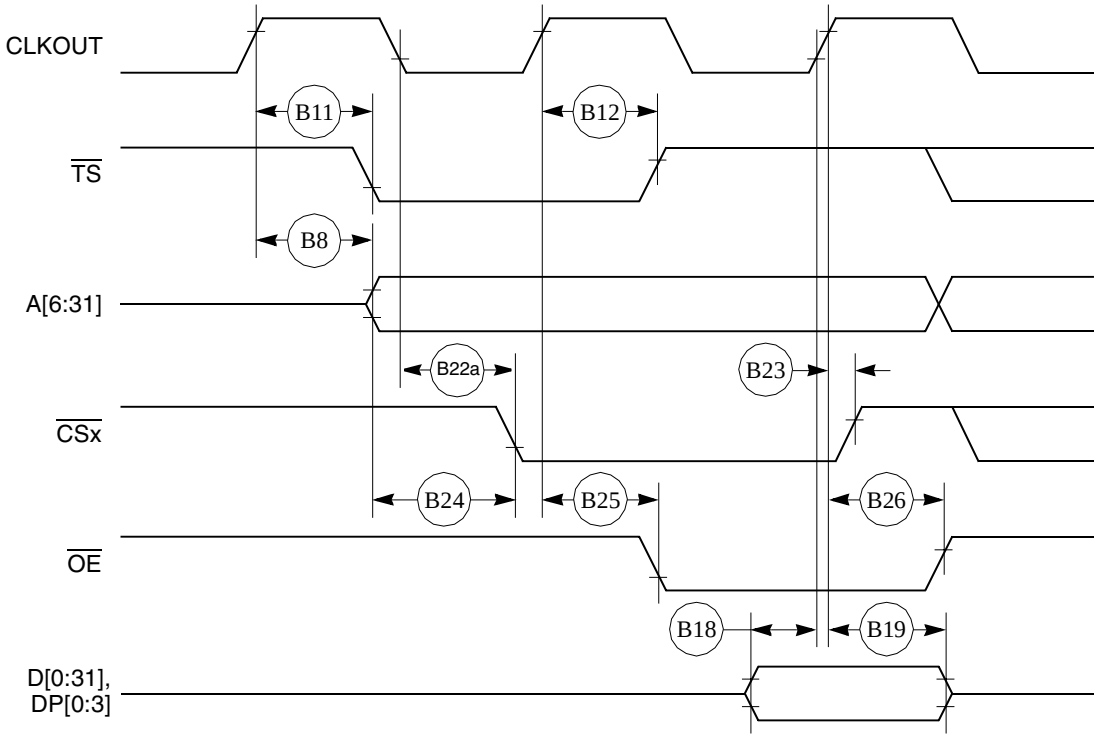

Figure 10. External Bus Read Timing (GPCM Controlled—TRLX = 0, ACS = 10)

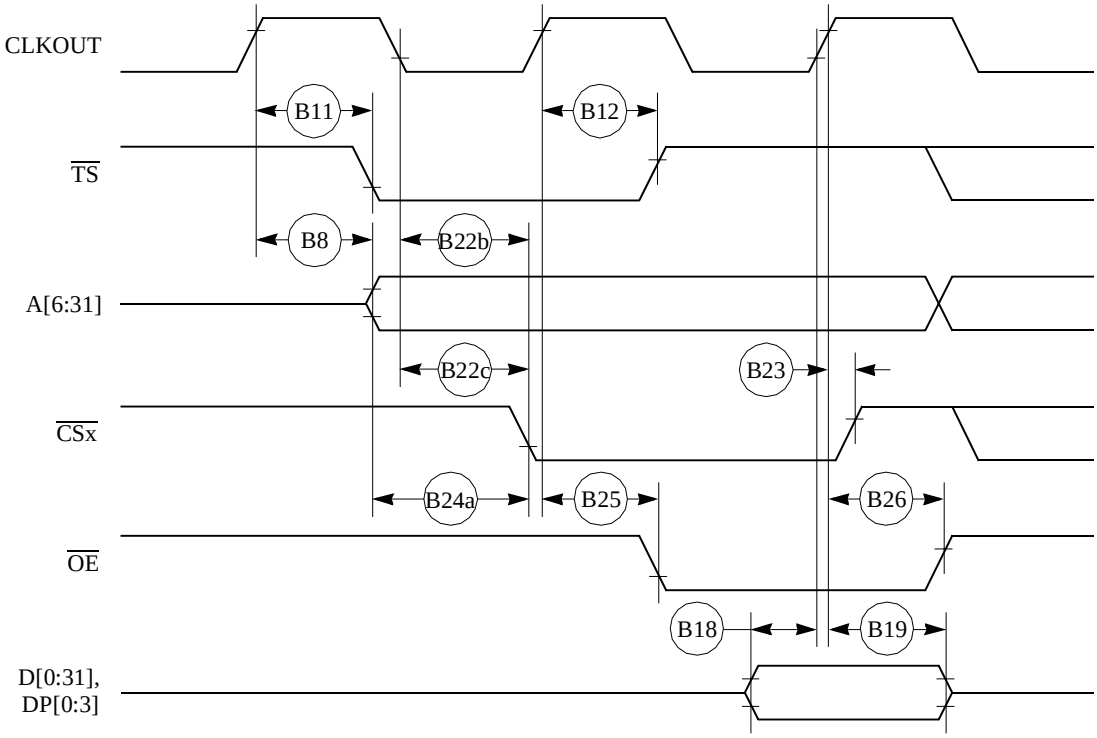

Figure 11. External Bus Read Timing (GPCM Controlled—TRLX = 0, ACS = 11)

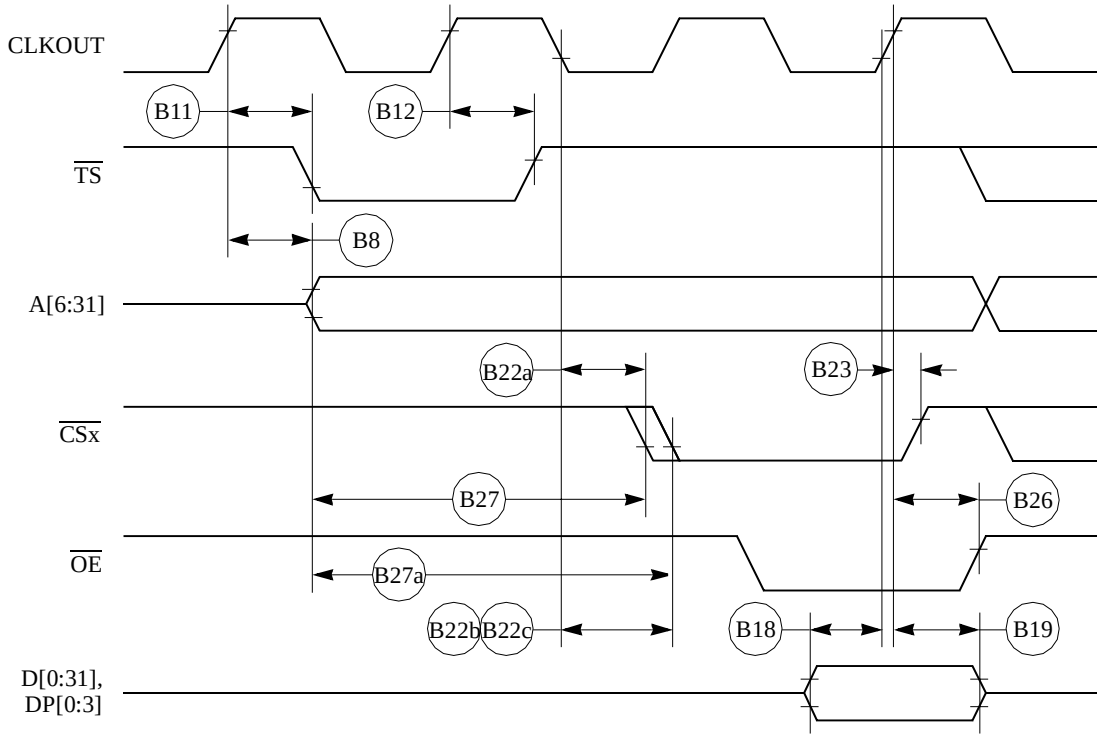

Figure 12. External Bus Read Timing (GPCM Controlled—TRLX = 1, ACS = 10, ACS = 11)

Figure 13 through Figure 15 provide the timing for the external bus write controlled by various GPCM factors.

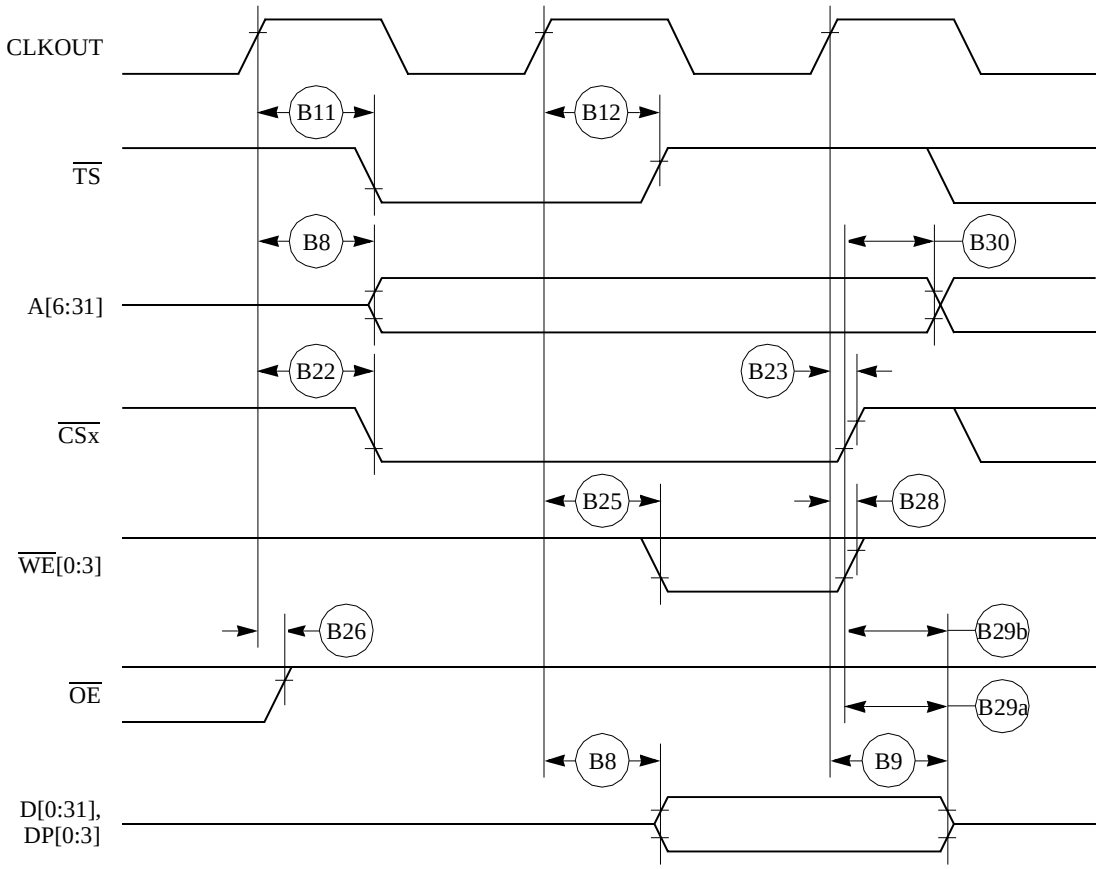

Figure 13. External Bus Write Timing (GPCM Controlled—TRLX = 0, CSNT = 0)

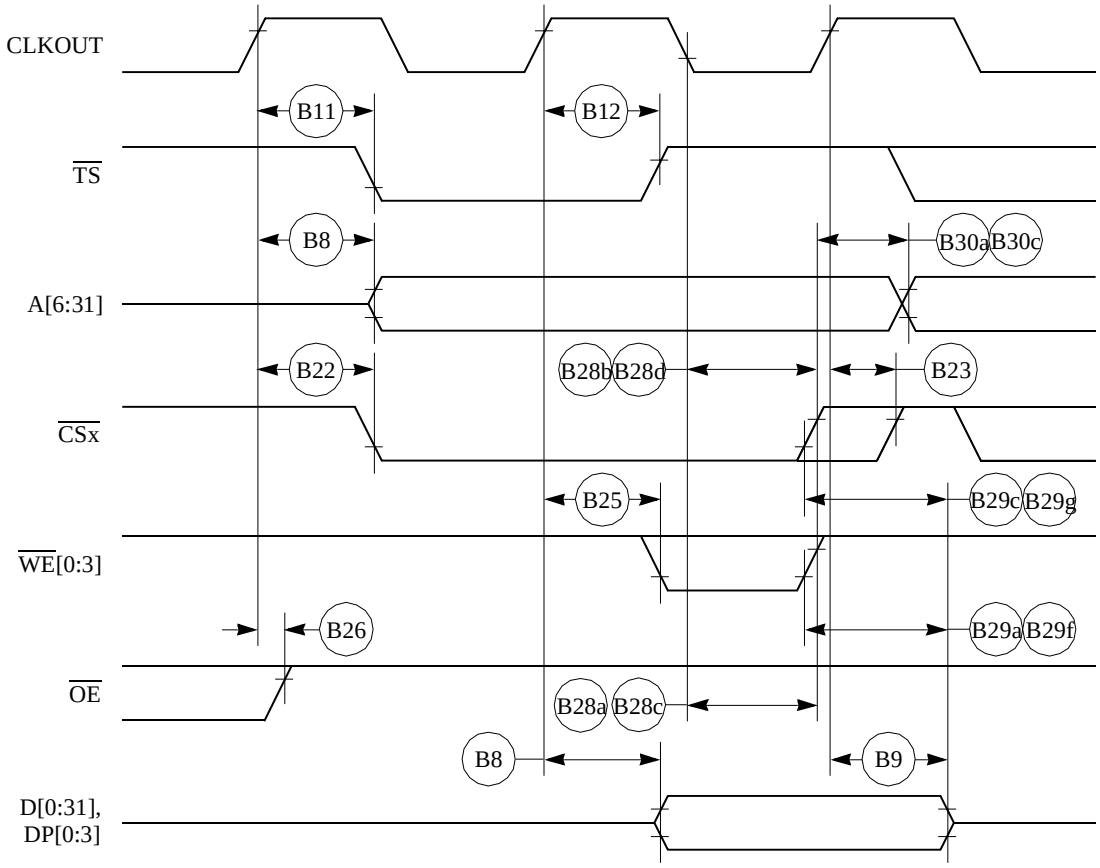

Figure 14. External Bus Write Timing (GPCM Controlled—TRLX = 0, CSNT = 1)

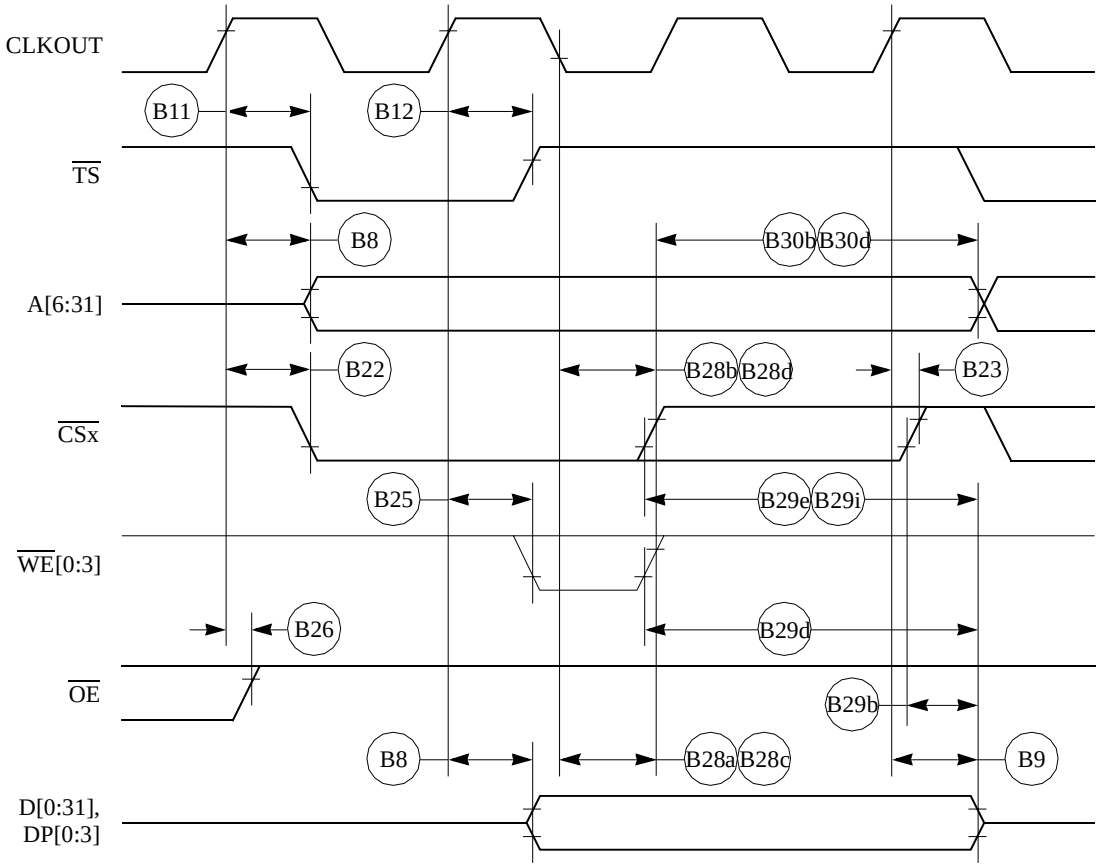

Figure 15. External Bus Write Timing (GPCM Controlled—TRLX = 1, CSNT = 1)

Figure 16 provides the timing for the external bus controlled by the UPM.

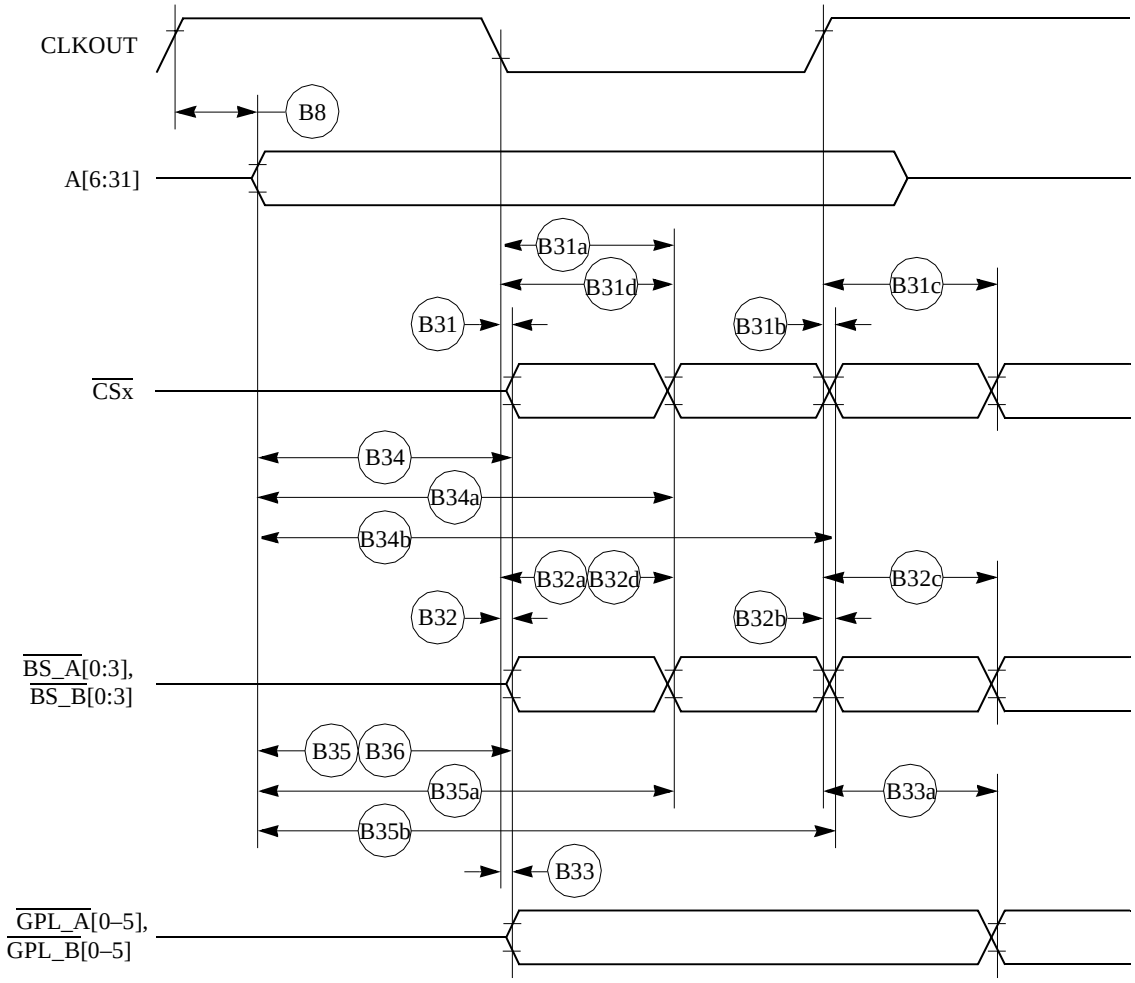

Figure 16. External Bus Timing (UPM Controlled Signals)

Figure 17 provides the timing for the asynchronous asserted UPWAIT signal controlled by the UPM.

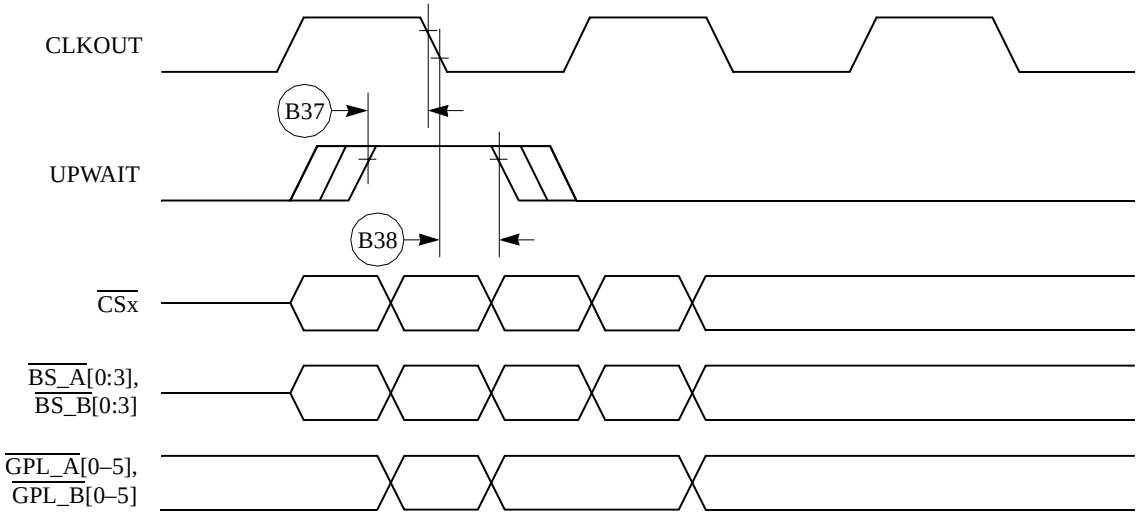

Figure 17. Asynchronous UPWAIT Asserted Detection in UPM Handled Cycles Timing

Figure 18 provides the timing for the asynchronous negated UPWAIT signal controlled by the UPM.

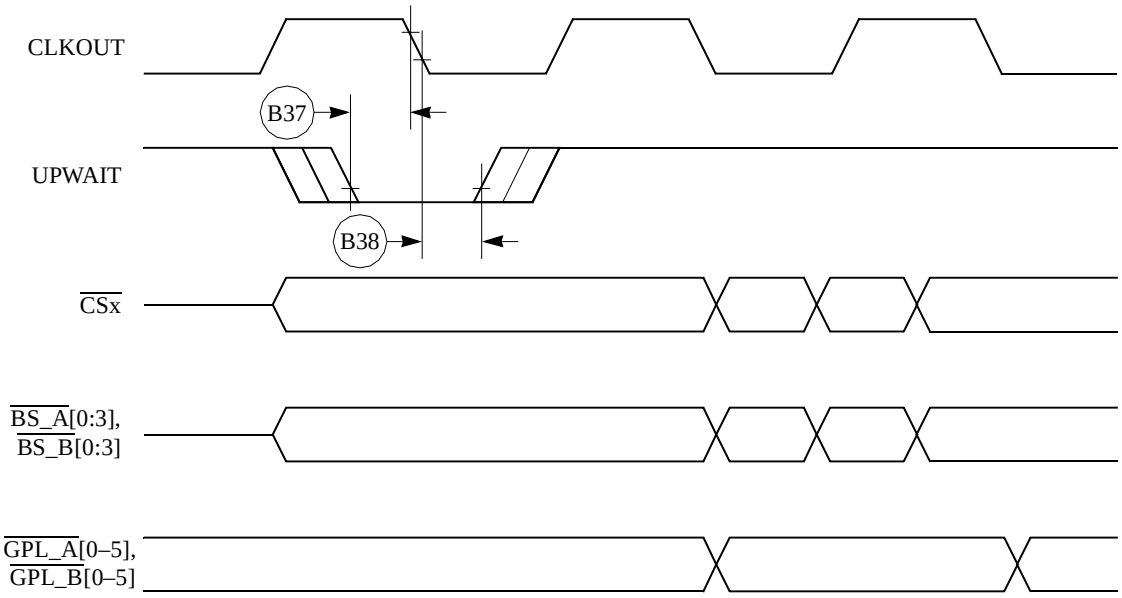

Figure 18. Asynchronous UPWAIT Negated Detection in UPM Handled Cycles Timing

Figure 19 provides the timing for the synchronous external master access controlled by the GPCM.

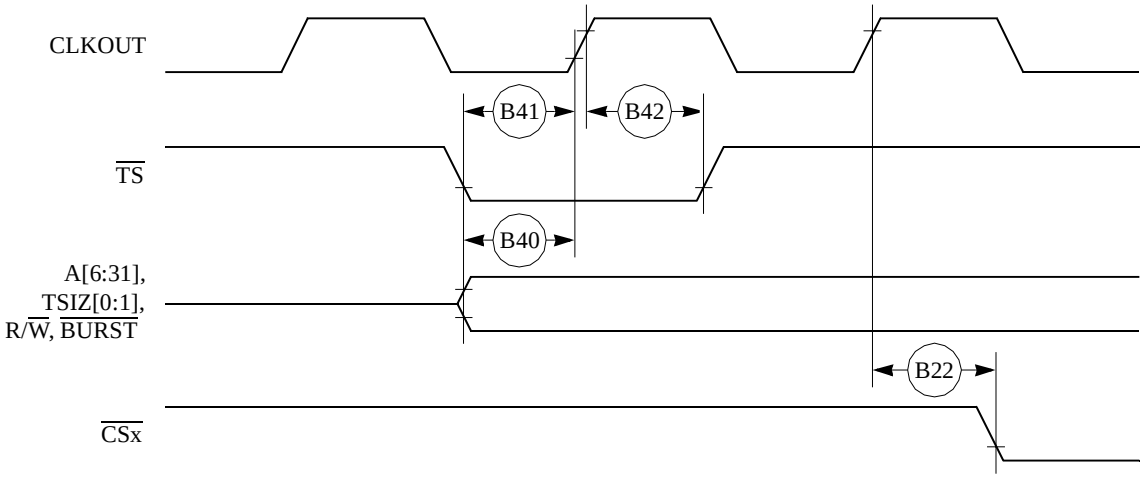

Figure 19. Synchronous External Master Access Timing (GPCM Handled ACS = 00)

Figure 20 provides the timing for the asynchronous external master memory access controlled by the GPCM.

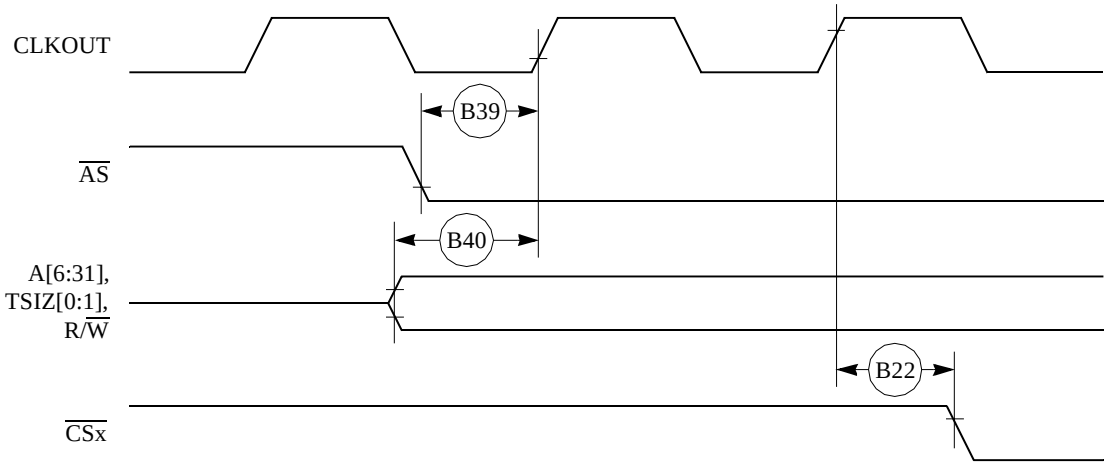

Figure 20. Asynchronous External Master Memory Access Timing (GPCM Controlled—ACS = 00)

Figure 21 provides the timing for the asynchronous external master control signals negation.

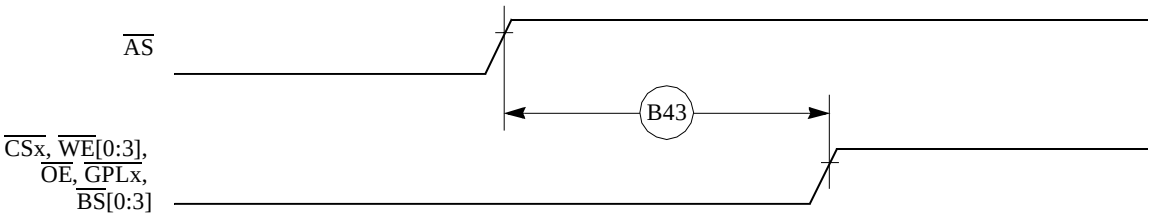

Figure 21. Asynchronous External Master—Control Signals Negation Timing

Table 7 provides interrupt timing for the MPC850.

Table 7. Interrupt Timing

Num	Characteristic [1]	50 MHz		66MHz		80 MHz		Unit
		Min	Max	Min	Max	Min	Max	
I39	$\overline{\text{IRQx}}$ valid to CLKOUT rising edge (set up time)	6.00	—	6.00	—	6.00	—	ns
I40	$\overline{\text{IRQx}}$ hold time after CLKOUT.	2.00	—	2.00	—	2.00	—	ns
I41	$\overline{\text{IRQx}}$ pulse width low	3.00	—	3.00	—	3.00	—	ns
I42	$\overline{\text{IRQx}}$ pulse width high	3.00	—	3.00	—	3.00	—	ns
I43	$\overline{\text{IRQx}}$ edge-to-edge time	80.00	—	121.0	—	100.0	—	ns

1 The timings I39 and I40 describe the testing conditions under which the $\overline{\text{IRQ}}$ lines are tested when being defined as level sensitive. The $\overline{\text{IRQ}}$ lines are synchronized internally and do not have to be asserted or negated with reference to the CLKOUT.

The timings I41, I42, and I43 are specified to allow the correct function of the $\overline{\text{IRQ}}$ lines detection circuitry, and has no direct relation with the total system interrupt latency that the MPC850 is able to support

Figure 22 provides the interrupt detection timing for the external level-sensitive lines.

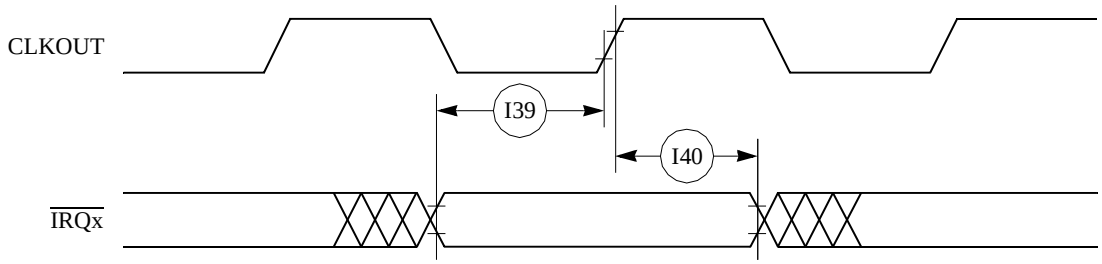

Figure 22. Interrupt Detection Timing for External Level Sensitive Lines

Figure 23 provides the interrupt detection timing for the external edge-sensitive lines.

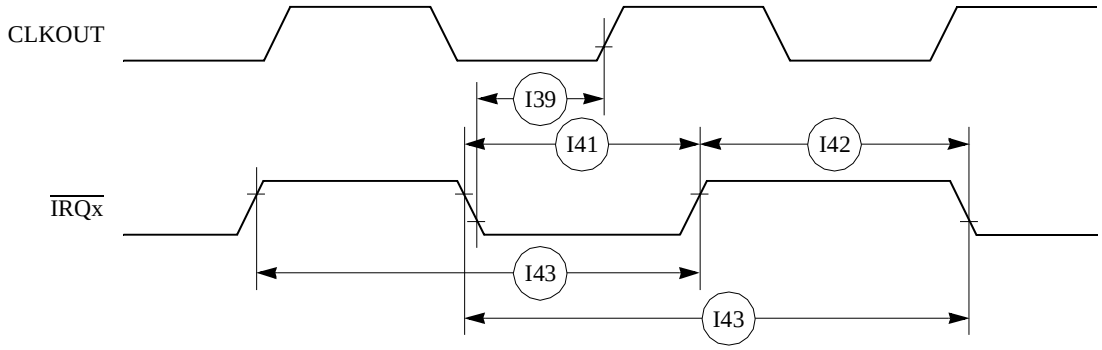

Figure 23. Interrupt Detection Timing for External Edge Sensitive Lines

Table 8 shows the PCMCIA timing for the MPC850.

Table 8. PCMCIA Timing

Num	Characteristic	50MHz		66MHz		80 MHz		FFACTOR	Unit
		Min	Max	Min	Max	Min	Max		
P44	A[6–31], REG valid to PCMCIA strobe asserted. [1]	13.00	—	21.00	—	17.00	—	0.750	ns
P45	A[6–31], REG valid to ALE negation.[1]	18.00	—	28.00	—	23.00	—	1.000	ns
P46	CLKOUT to REG valid	5.00	13.00	8.00	16.00	6.00	14.00	0.250	ns
P47	CLKOUT to REG Invalid.	6.00	—	9.00	—	7.00	—	0.250	ns
P48	CLKOUT to CE1, CE2 asserted.	5.00	13.00	8.00	16.00	6.00	14.00	0.250	
P49	CLKOUT to CE1, CE2 negated.	5.00	13.00	8.00	16.00	6.00	14.00	0.250	ns
P50	CLKOUT to PCOE, IORD, PCWE, IOWR assert time.	—	11.00	—	11.00	—	11.00	—	ns
P51	CLKOUT to PCOE, IORD, PCWE, IOWR negate time.	2.00	11.00	2.00	11.00	2.00	11.00	—	ns
P52	CLKOUT to ALE assert time	5.00	13.00	8.00	16.00	6.00	14.00	0.250	ns
P53	CLKOUT to ALE negate time	—	13.00	—	16.00	—	14.00	0.250	ns
P54	PCWE, IOWR negated to D[0–31] invalid.[1]	3.00	—	6.00	—	4.00	—	0.250	ns
P55	WAIT_B valid to CLKOUT rising edge.[1]	8.00	—	8.00	—	8.00	—	—	ns
P56	CLKOUT rising edge to WAIT_B invalid.[1]	2.00	—	2.00	—	2.00	—	—	ns

[1] PSST = 1. Otherwise add PSST times cycle time.
PSHT = 0. Otherwise add PSHT times cycle time.

These synchronous timings define when the WAIT_B signal is detected in order to freeze (or relieve) the PCMCIA current cycle. The WAIT_B assertion will be effective only if it is detected 2 cycles before the PSL timer expiration. See PCMCIA Interface in the MPC850 PowerQUICC User's Manual.

Figure 24 provides the PCMCIA access cycle timing for the external bus read.

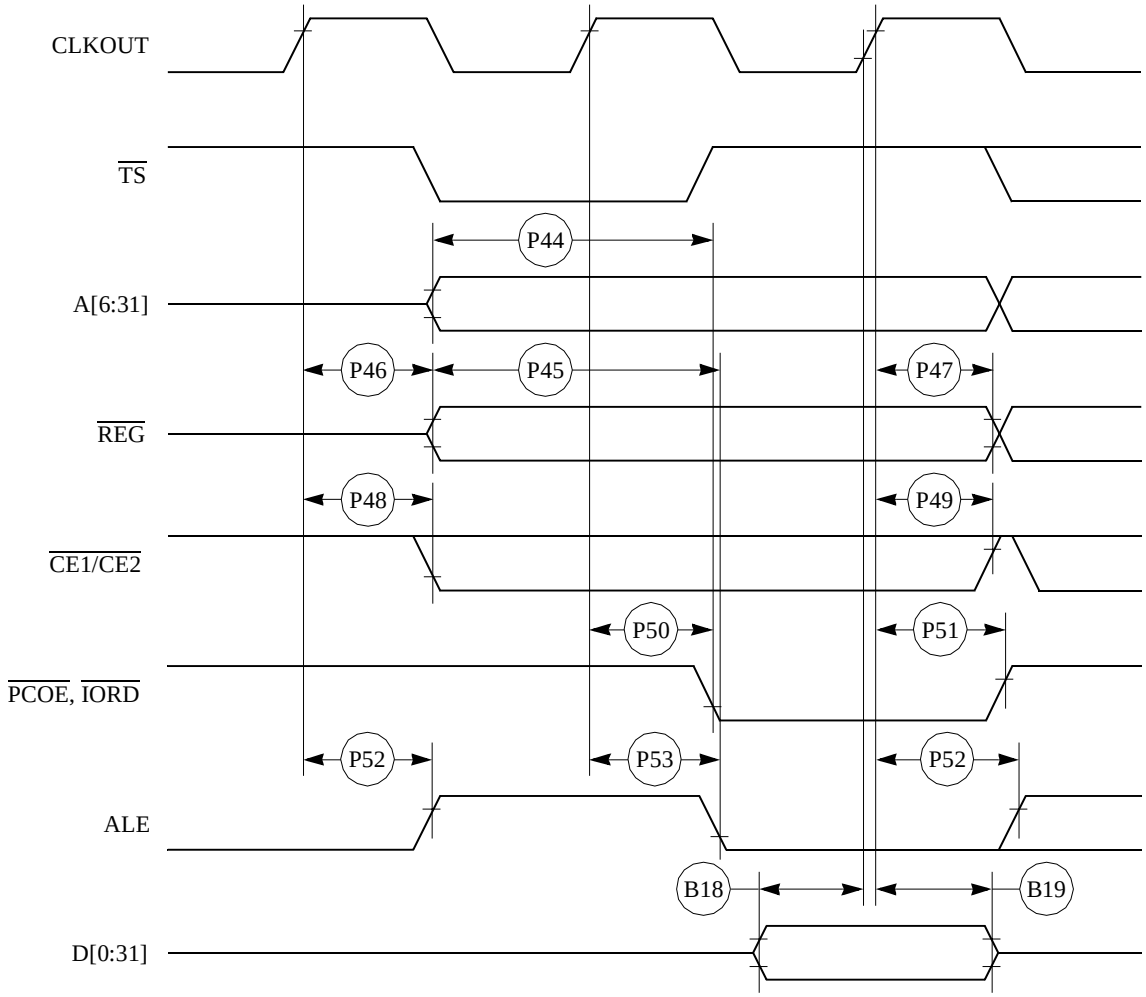

Figure 24. PCMCIA Access Cycles Timing External Bus Read

Figure 25 provides the PCMCIA access cycle timing for the external bus write.

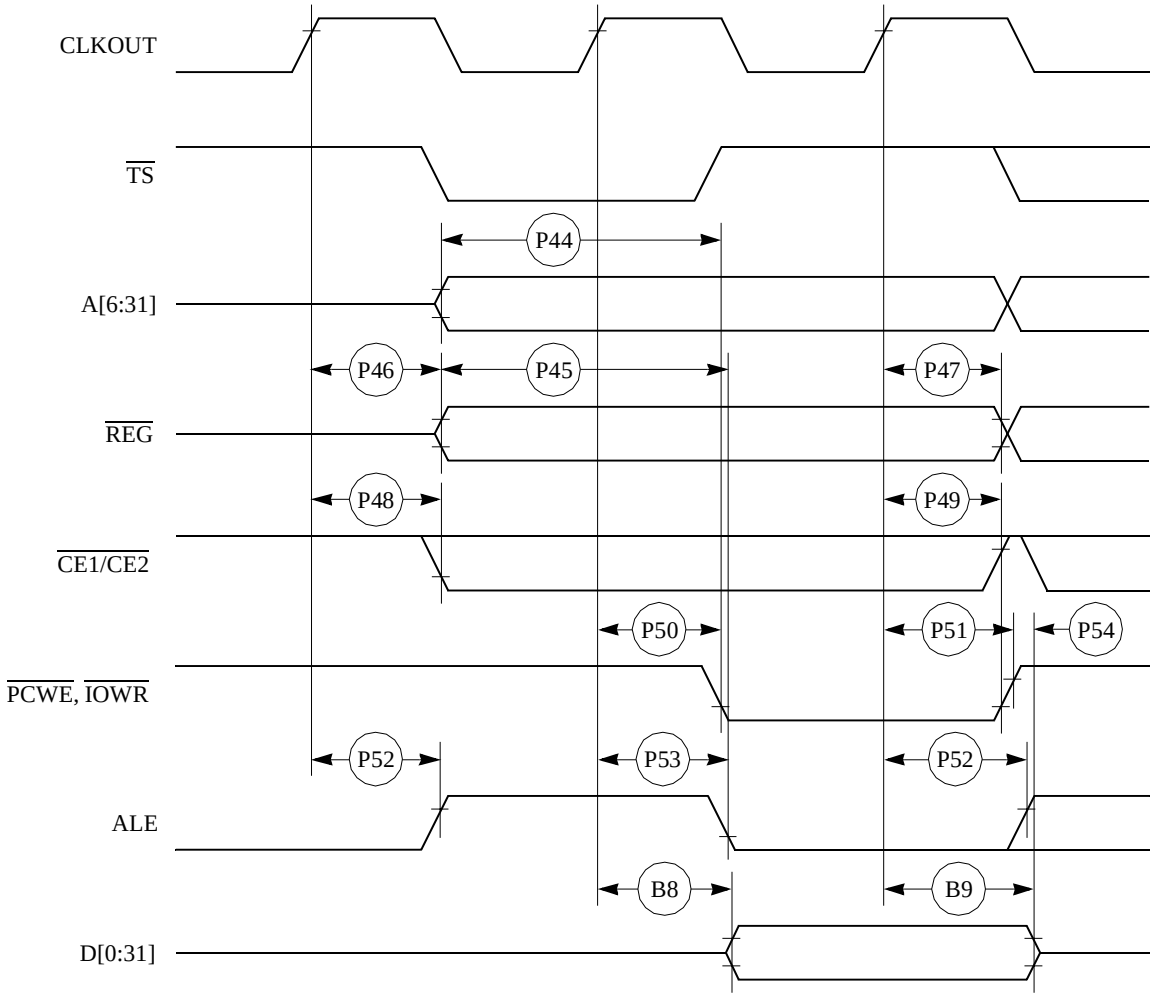

Figure 25. PCMCIA Access Cycles Timing External Bus Write

Figure 26 provides the PCMCIA WAIT signals detection timing.

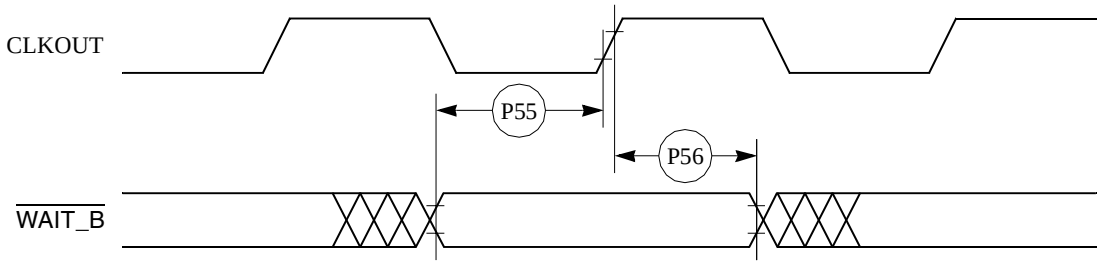

Figure 26. PCMCIA WAIT Signal Detection Timing

Table 9 shows the PCMCIA port timing for the MPC850.

Table 9. PCMCIA Port Timing

Num	Characteristic	50 MHz		66 MHz		80 MHz		Unit
		Min	Max	Min	Max	Min	Max	
P57	CLKOUT to OPx valid	—	19.00	—	19.00	—	19.00	ns
P58	$\overline{\text{HRESET}}$ negated to OPx drive [1]	18.00	—	26.00	—	22.00	—	ns
P59	IP_Xx valid to CLKOUT rising edge	5.00	—	5.00	—	5.00	—	ns
P60	CLKOUT rising edge to IP_Xx invalid	1.00	—	1.00	—	1.00	—	ns

[1] OP2 and OP3 only.

Figure 27 provides the PCMCIA output port timing for the MPC850.

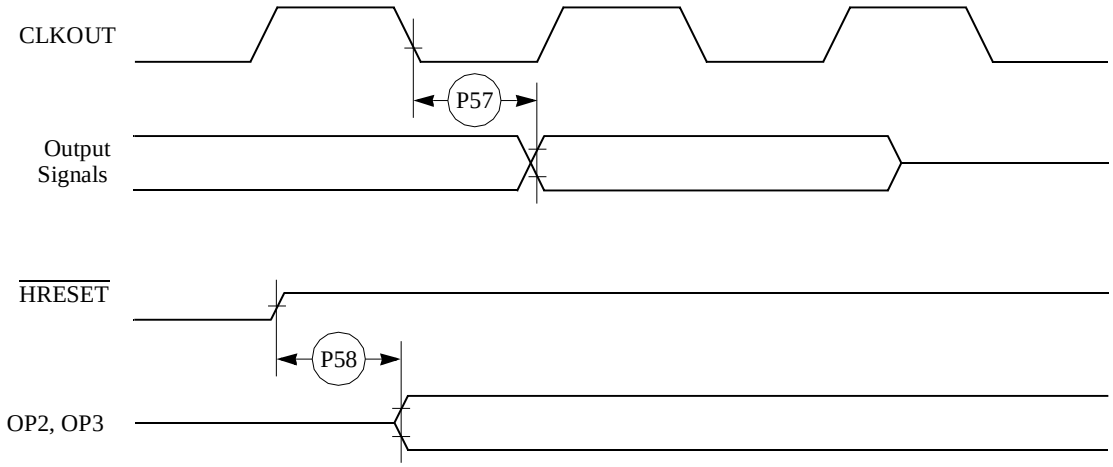

Figure 27. PCMCIA Output Port Timing

Figure 28 provides the PCMCIA output port timing for the MPC850.

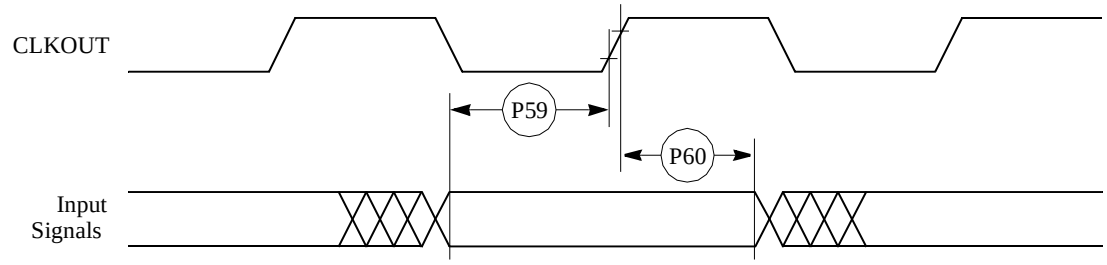

Figure 28. PCMCIA Input Port Timing

Table 10 shows the debug port timing for the MPC850.

Table 10. Debug Port Timing

Num	Characteristic	50 MHz		66 MHz		80 MHz		Unit
		Min	Max	Min	Max	Min	Max	
D61	DSCK cycle time	60.00	—	91.00	—	75.00	—	ns
D62	DSCK clock pulse width	25.00	—	38.00	—	31.00	—	ns
D63	DSCK rise and fall times	0.00	3.00	0.00	3.00	0.00	3.00	ns
D64	DSDI input data setup time	8.00	—	8.00	—	8.00	—	ns
D65	DSDI data hold time	5.00	—	5.00	—	5.00	—	ns
D66	DSCK low to DSDO data valid	0.00	15.00	0.00	15.00	0.00	15.00	ns
D67	DSCK low to DSDO invalid	0.00	2.00	0.00	2.00	0.00	2.00	ns

Figure 29 provides the input timing for the debug port clock.

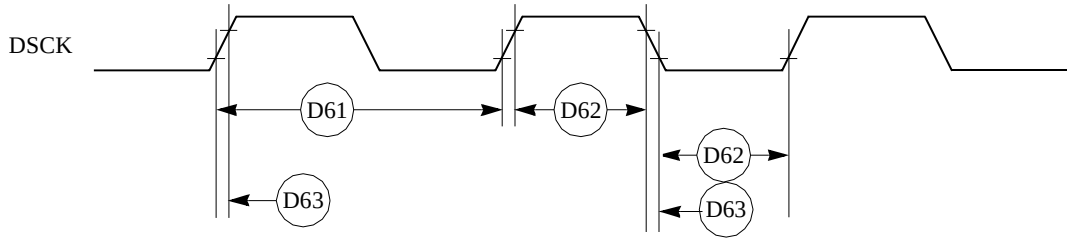

Figure 29. Debug Port Clock Input Timing

Figure 30 provides the timing for the debug port.

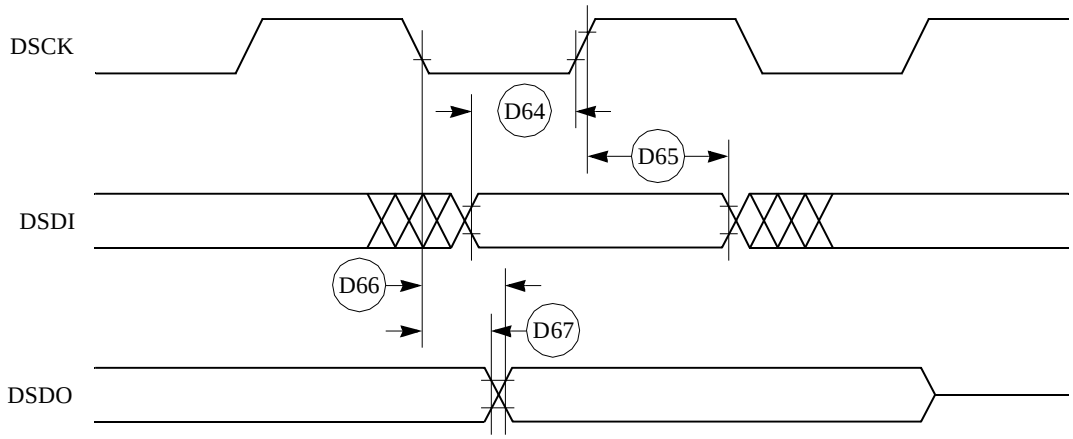

Figure 30. Debug Port Timings

Table 11 shows the reset timing for the MPC850.

Table 11. Reset Timing

Num	Characteristic	50 MHz		66MHz		80 MHz		FFACTOR	Unit
		Min	Max	Min	Max	Min	Max		
R69	CLKOUT to $\overline{\text{HRESET}}$ high impedance	—	20.00	—	20.00	—	20.00	—	ns
R70	CLKOUT to $\overline{\text{SRESET}}$ high impedance	—	20.00	—	20.00	—	20.00	—	ns
R71	$\overline{\text{RSTCONF}}$ pulse width	340.00	—	515.00	—	425.00	—	17.000	ns
R72		—	—	—	—	—	—	—	
R73	Configuration data to $\overline{\text{HRESET}}$ rising edge set up time	350.00	—	505.00	—	425.00	—	15.000	ns
R74	Configuration data to $\overline{\text{RSTCONF}}$ rising edge set up time	350.00	—	350.00	—	350.00	—	—	ns
R75	Configuration data hold time after $\overline{\text{RSTCONF}}$ negation	0.00	—	0.00	—	0.00	—	—	ns
R76	Configuration data hold time after $\overline{\text{HRESET}}$ negation	0.00	—	0.00	—	0.00	—	—	ns
R77	$\overline{\text{HRESET}}$ and $\overline{\text{RSTCONF}}$ asserted to data out drive	—	25.00	—	25.00	—	25.00	—	ns
R78	$\overline{\text{RSTCONF}}$ negated to data out high impedance.	—	25.00	—	25.00	—	25.00	—	ns
R79	CLKOUT of last rising edge before chip tristates $\overline{\text{HRESET}}$ to data out high impedance.	—	25.00	—	25.00	—	25.00	—	ns
R80	DSDI, DSCK set up	60.00	—	90.00	—	75.00	—	3.000	ns
R81	DSDI, DSCK hold time	0.00	—	0.00	—	0.00	—	—	ns
R82	$\overline{\text{SRESET}}$ negated to CLKOUT rising edge for DSDI and DSCK sample	160.00	—	242.00	—	200.00	—	8.000	ns

Figure 31 shows the reset timing for the data bus configuration.

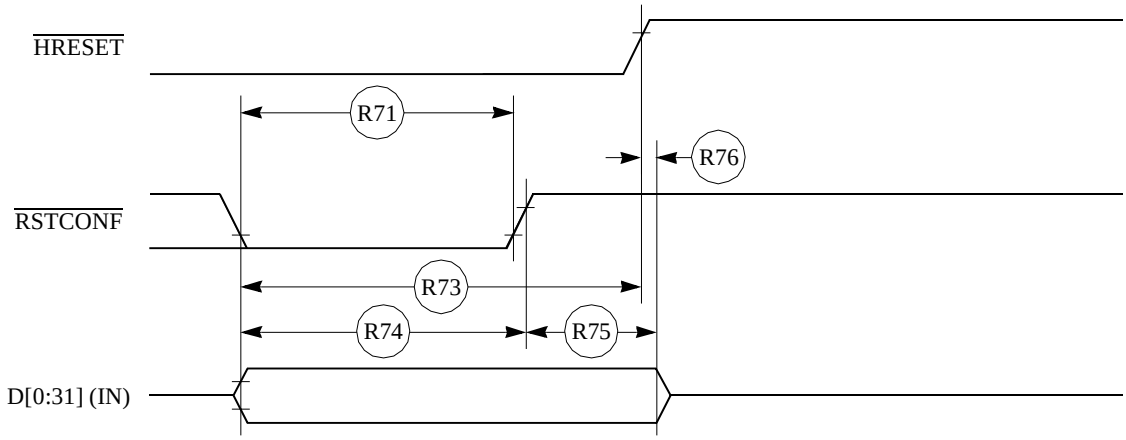

Figure 31. Reset Timing—Configuration from Data Bus

Figure 32 provides the reset timing for the data bus weak drive during configuration.

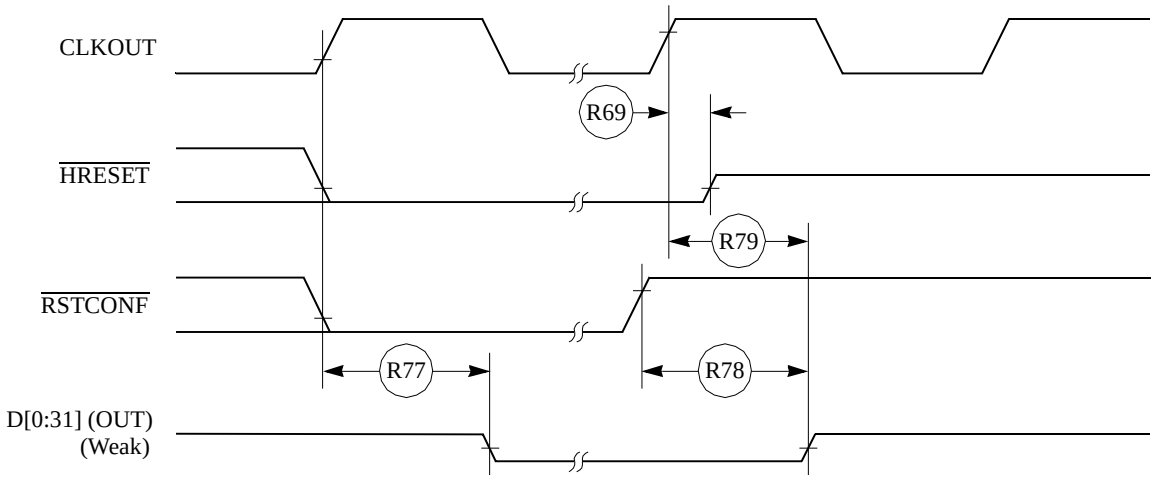

Figure 32. Reset Timing—Data Bus Weak Drive during Configuration

Figure 33 provides the reset timing for the debug port configuration.

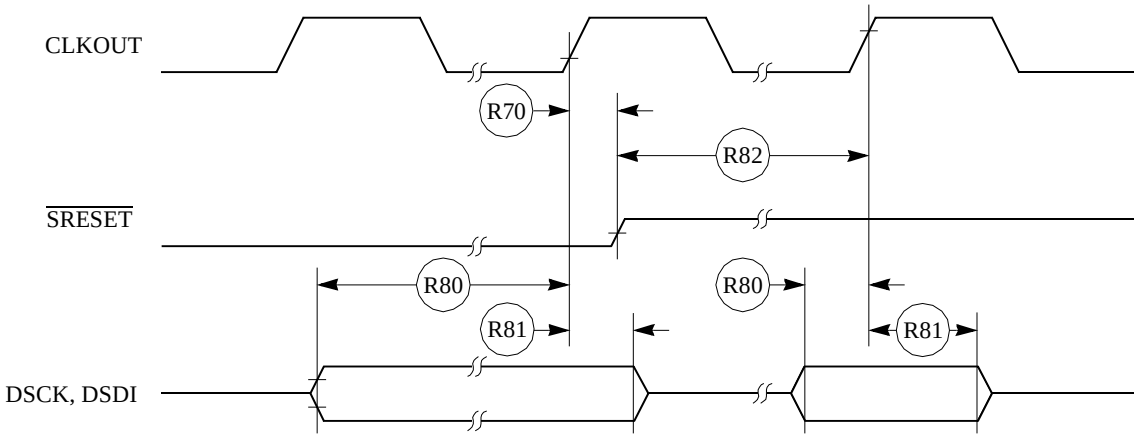

Figure 33. Reset Timing—Debug Port Configuration

7 IEEE 1149.1 Electrical Specifications

Table 12 provides the JTAG timings for the MPC850 as shown in Figure 34 to Figure 37.

Table 12. JTAG Timing

Num	Characteristic	50 MHz		66MHz		80 MHz		Unit
		Min	Max	Min	Max	Min	Max	
J82	TCK cycle time	100.00	—	100.00	—	100.00	—	ns
J83	TCK clock pulse width measured at 1.5 V	40.00	—	40.00	—	40.00	—	ns
J84	TCK rise and fall times	0.00	10.00	0.00	10.00	0.00	10.00	ns
J85	TMS, TDI data setup time	5.00	—	5.00	—	5.00	—	ns
J86	TMS, TDI data hold time	25.00	—	25.00	—	25.00	—	ns
J87	TCK low to TDO data valid	—	27.00	—	27.00	—	27.00	ns
J88	TCK low to TDO data invalid	0.00	—	0.00	—	0.00	—	ns
J89	TCK low to TDO high impedance	—	20.00	—	20.00	—	20.00	ns
J90	$\overline{\text{TRST}}$ assert time	100.00	—	100.00	—	100.00	—	ns
J91	$\overline{\text{TRST}}$ setup time to TCK low	40.00	—	40.00	—	40.00	—	ns
J92	TCK falling edge to output valid	—	50.00	—	50.00	—	50.00	ns
J93	TCK falling edge to output valid out of high impedance	—	50.00	—	50.00	—	50.00	ns
J94	TCK falling edge to output high impedance	—	50.00	—	50.00	—	50.00	ns
J95	Boundary scan input valid to TCK rising edge	50.00	—	50.00	—	50.00	—	ns
J96	TCK rising edge to boundary scan input invalid	50.00	—	50.00	—	50.00	—	ns

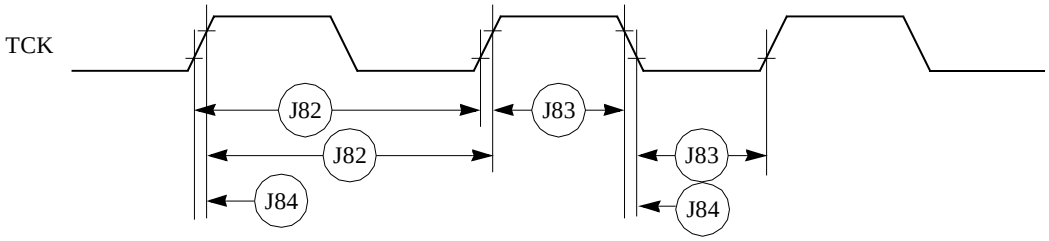

Figure 34. JTAG Test Clock Input Timing

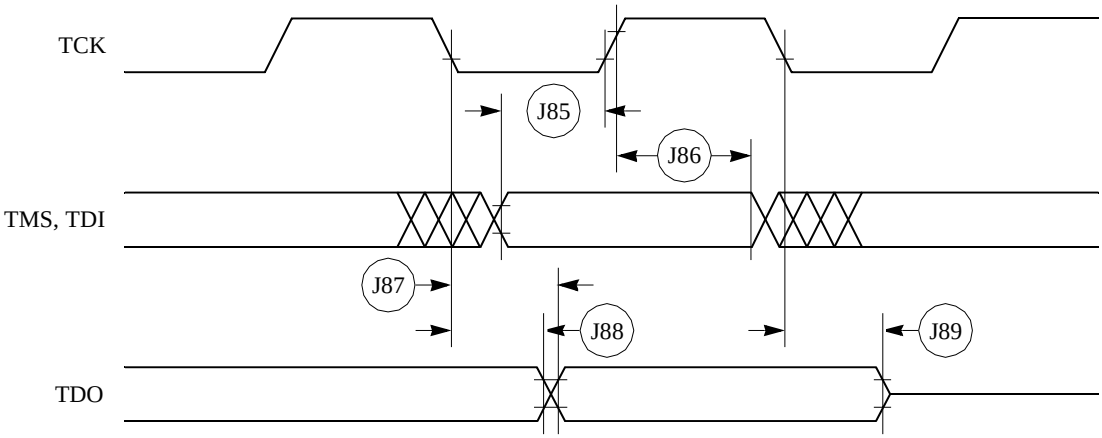

Figure 35. JTAG Test Access Port Timing Diagram

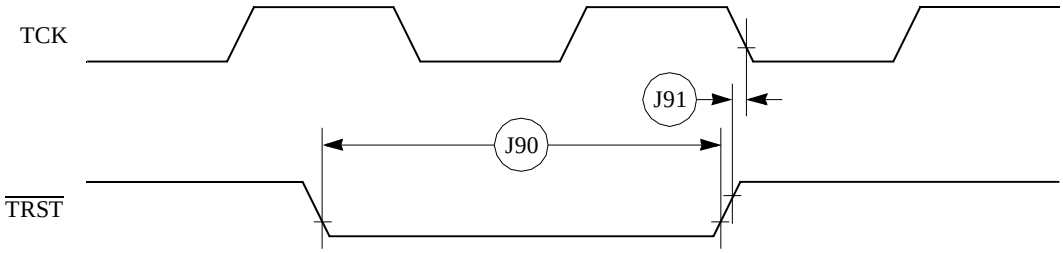

Figure 36. JTAG $\overline{\text{TRST}}$ Timing Diagram

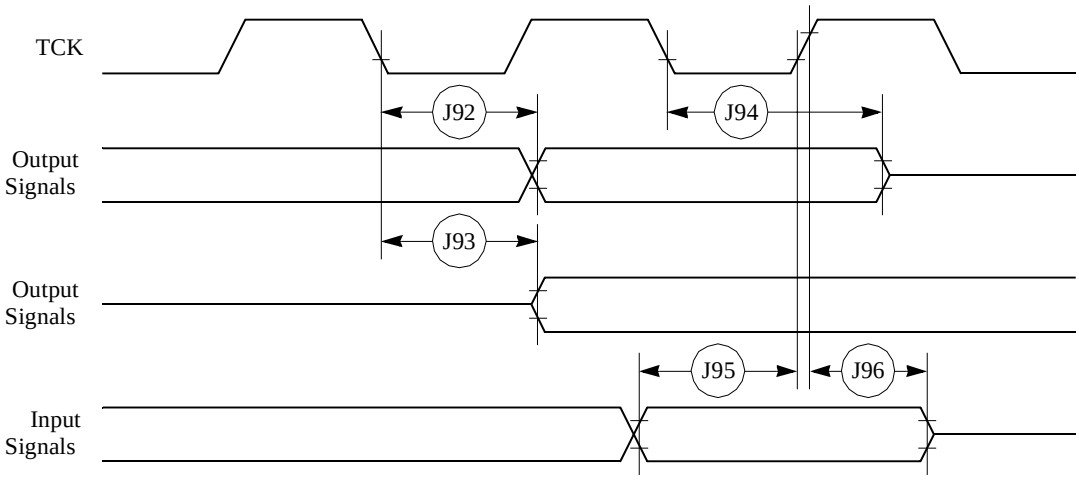

Figure 37. Boundary Scan (JTAG) Timing Diagram

8 CPM Electrical Characteristics

This section provides the AC and DC electrical specifications for the communications processor module (CPM) of the MPC850.

8.1 PIO AC Electrical Specifications

Table 13 provides the parallel I/O timings for the MPC850 as shown in Figure 38.

Table 13. Parallel I/O Timing

Num	Characteristic	All Frequencies		Unit
		Min	Max	
29	Data-in setup time to clock high	15	—	ns
30	Data-in hold time from clock high	7.5	—	ns
31	Clock low to data-out valid (CPU writes data, control, or direction)	—	25	ns

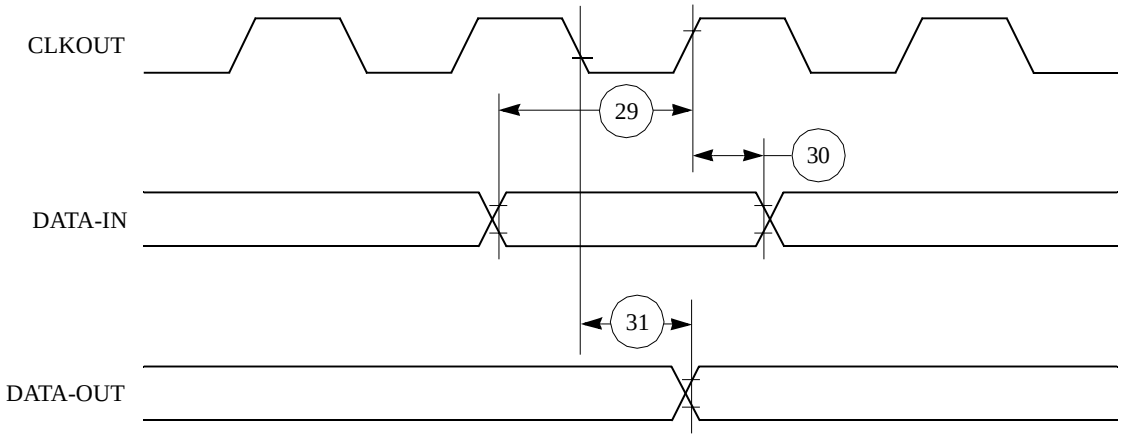

Figure 38. Parallel I/O Data-In/Data-Out Timing Diagram

8.2 IDMA Controller AC Electrical Specifications

Table 14 provides the IDMA controller timings as shown in Figure 39 to Figure 42.

Table 14. IDMA Controller Timing

Num	Characteristic	All Frequencies		Unit
		Min	Max	
40	$\overline{\text{DREQ}}$ setup time to clock high	7.00	—	ns
41	$\overline{\text{DREQ}}$ hold time from clock high	3.00	—	ns
42	$\overline{\text{SDACK}}$ assertion delay from clock high	—	12.00	ns
43	$\overline{\text{SDACK}}$ negation delay from clock low	—	12.00	ns
44	$\overline{\text{SDACK}}$ negation delay from $\overline{\text{TA}}$ low	—	20.00	ns
45	$\overline{\text{SDACK}}$ negation delay from clock high	—	15.00	ns
46	$\overline{\text{TA}}$ assertion to falling edge of the clock setup time (applies to external $\overline{\text{TA}}$)	7.00	—	ns

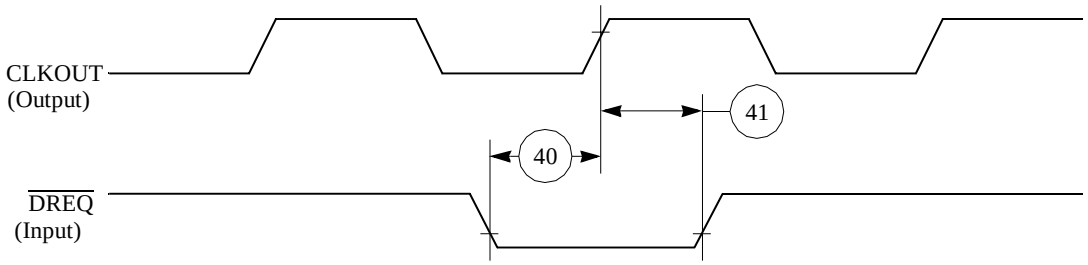

Figure 39. IDMA External Requests Timing Diagram

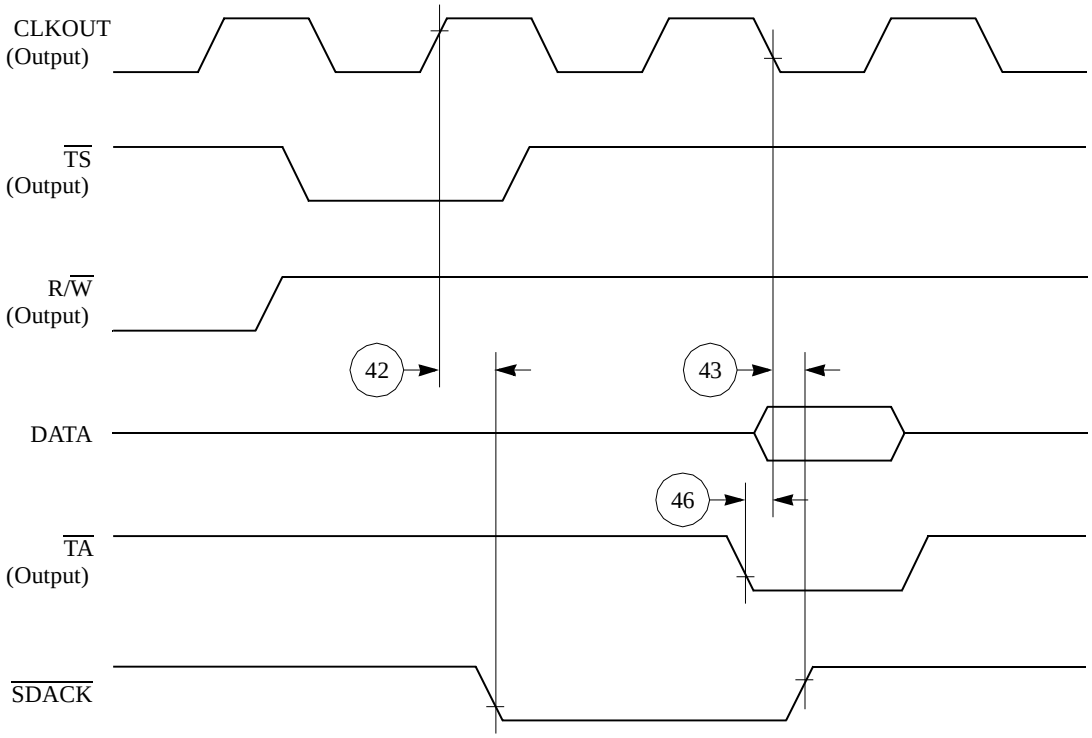

Figure 40. SDACK Timing Diagram—Peripheral Write, TA Sampled Low at the Falling Edge of the Clock

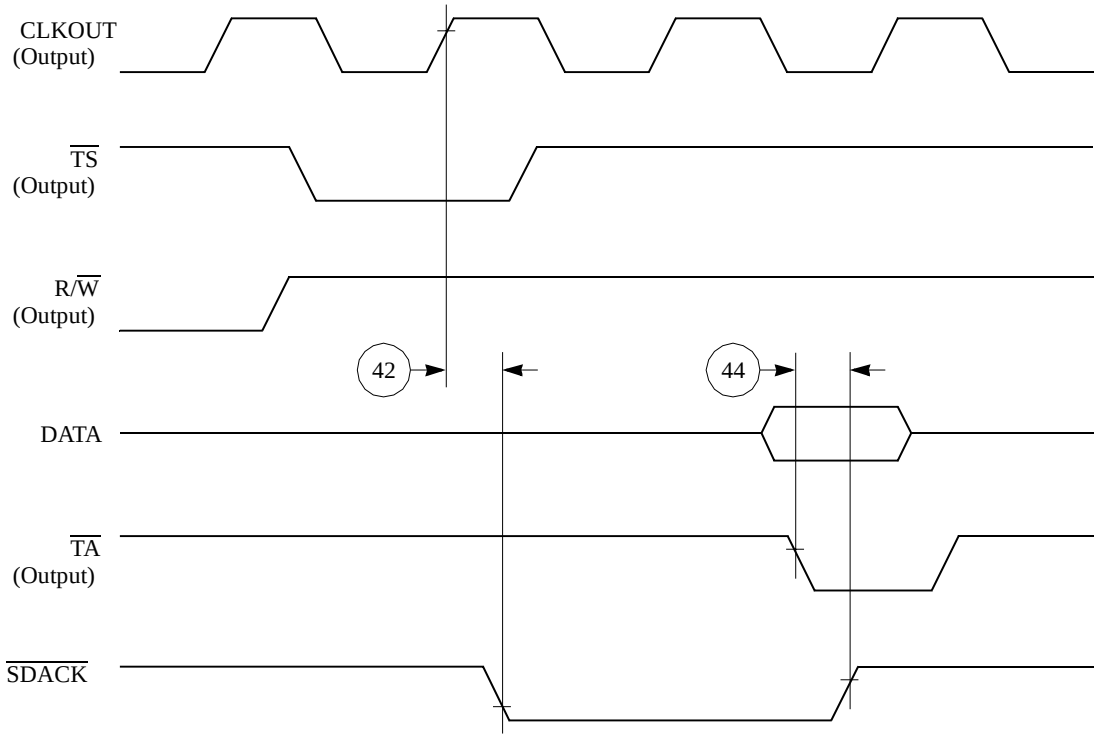

Figure 41. SDACK Timing Diagram—Peripheral Write, TA Sampled High at the Falling Edge of the Clock

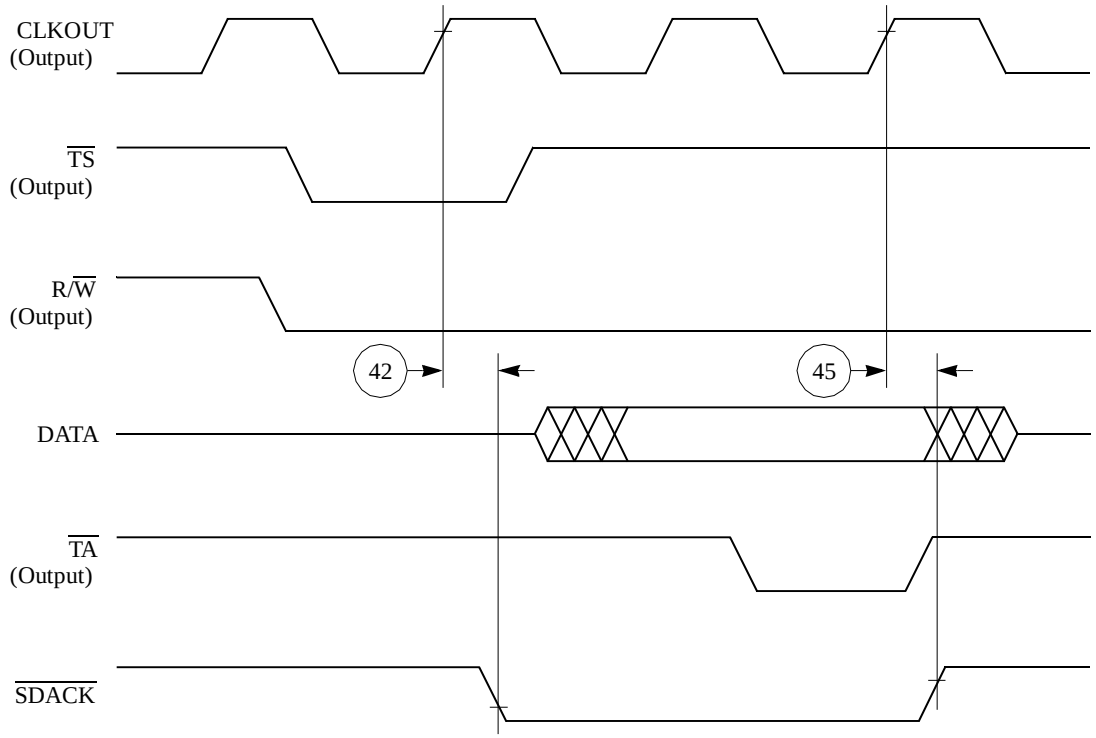

Figure 42. SDACK Timing Diagram—Peripheral Read

8.3 Baud Rate Generator AC Electrical Specifications

Table 15 provides the baud rate generator timings as shown in Figure 43.

Table 15. Baud Rate Generator Timing

Num	Characteristic	All Frequencies		Unit
		Min	Max	
50	BRGO rise and fall time	—	10.00	ns
51	BRGO duty cycle	40.00	60.00	%
52	BRGO cycle	40.00	—	ns

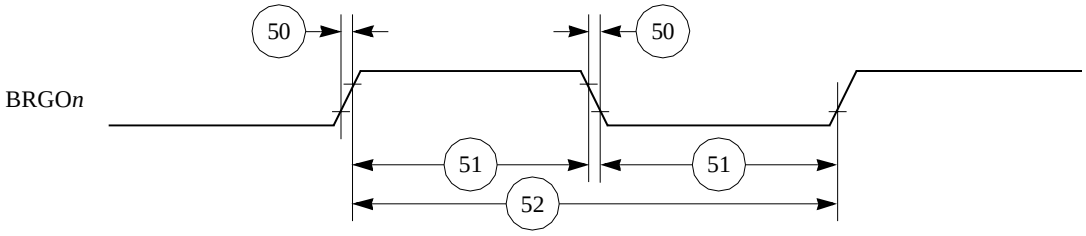

Figure 43. Baud Rate Generator Timing Diagram

8.4 Timer AC Electrical Specifications

Table 16 provides the baud rate generator timings as shown in Figure 44.

Table 16. Timer Timing

Num	Characteristic	All Frequencies		Unit
		Min	Max	
61	TIN/$\overline{\text{TGATE}}$ rise and fall time	10.00	—	ns
62	TIN/$\overline{\text{TGATE}}$ low time	1.00	—	clk
63	TIN/$\overline{\text{TGATE}}$ high time	2.00	—	clk
64	TIN/$\overline{\text{TGATE}}$ cycle time	3.00	—	clk
65	CLKO high to $\overline{\text{TOUT}}$ valid	3.00	25.00	ns

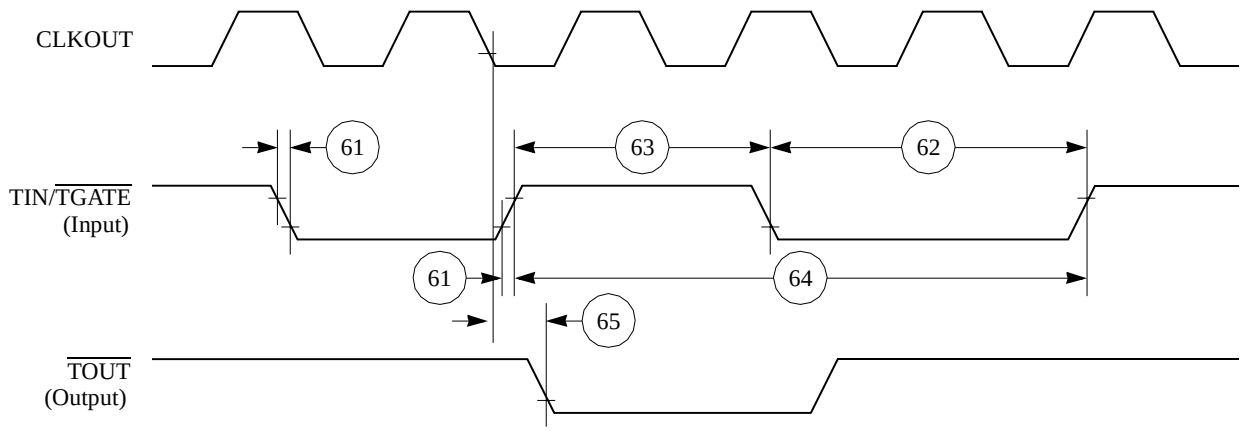

Figure 44. CPM General-Purpose Timers Timing Diagram

8.5 Serial Interface AC Electrical Specifications

Table 17 provides the serial interface timings as shown in Figure 45 to Figure 49.

Table 17. SI Timing

Num	Characteristic	All Frequencies		Unit
		Min	Max	
70	L1RCLK, L1TCLK frequency (DSC = 0) [1, 2]	—	SYNCCLK/2.5	MHz
71	L1RCLK, L1TCLK width low (DSC = 0) [2]	P + 10	—	ns
71a	L1RCLK, L1TCLK width high (DSC = 0) [3]	P + 10	—	ns
72	L1TXD, L1ST*n*, $\overline{\text{L1RQ}}$, L1xCLKO rise/fall time	—	15.00	ns
73	L1RSYNC, L1TSYNC valid to L1xCLK edge Edge (SYNC setup time)	20.00	—	ns
74	L1xCLK edge to L1RSYNC, L1TSYNC, invalid (SYNC hold time)	35.00	—	ns
75	L1RSYNC, L1TSYNC rise/fall time	—	15.00	ns
76	L1RXD valid to L1xCLK edge (L1RXD setup time)	17.00	—	ns
77	L1xCLK edge to L1RXD invalid (L1RXD hold time)	13.00	—	ns
78	L1xCLK edge to L1ST*n* valid [4]	10.00	45.00	ns
78A	L1SYNC valid to L1ST*n* valid	10.00	45.00	ns
79	L1xCLK edge to L1ST*n* invalid	10.00	45.00	ns
80	L1xCLK edge to L1TXD valid	10.00	55.00	ns
80A	L1TSYNC valid to L1TXD valid [4]	10.00	55.00	ns
81	L1xCLK edge to L1TXD high impedance	0.00	42.00	ns

Table 17. SI Timing (continued)

Num	Characteristic	All Frequencies		Unit
		Min	Max	
82	L1RCLK, L1TCLK frequency (DSC =1)	—	16.00 or SYNCCLK/2	MHz
83	L1RCLK, L1TCLK width low (DSC =1)	P + 10	—	ns
83A	L1RCLK, L1TCLK width high (DSC = 1)[3]	P + 10	—	ns
84	L1CLK edge to L1CLKO valid (DSC = 1)	—	30.00	ns
85	$\overline{\text{L1RQ}}$ valid before falling edge of L1TSYNC[4]	1.00	—	L1TCLK
86	L1GR setup time[2]	42.00	—	ns
87	L1GR hold time	42.00	—	ns
88	L1xCLK edge to L1SYNC valid (FSD = 00) CNT = 0000, BYT = 0, DSC = 0)	—	0.00	ns

1 The ratio SyncCLK/L1RCLK must be greater than 2.5/1.

2 These specs are valid for IDL mode only.

3 Where P = 1/CLKOUT. Thus for a 25-MHz CLKO1 rate, P = 40 ns.

4 These strobes and TxD on the first bit of the frame become valid after L1CLK edge or L1SYNC, whichever is later.

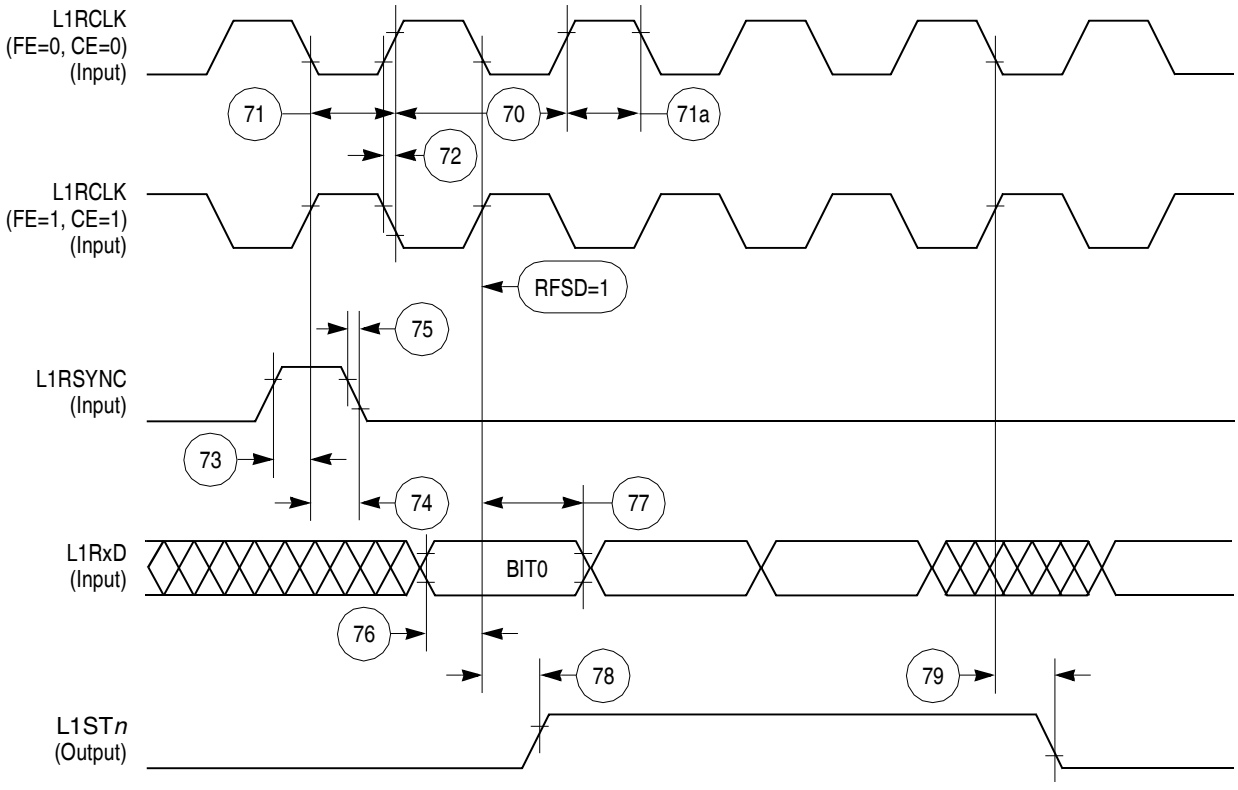

Figure 45. SI Receive Timing Diagram with Normal Clocking (DSC = 0)

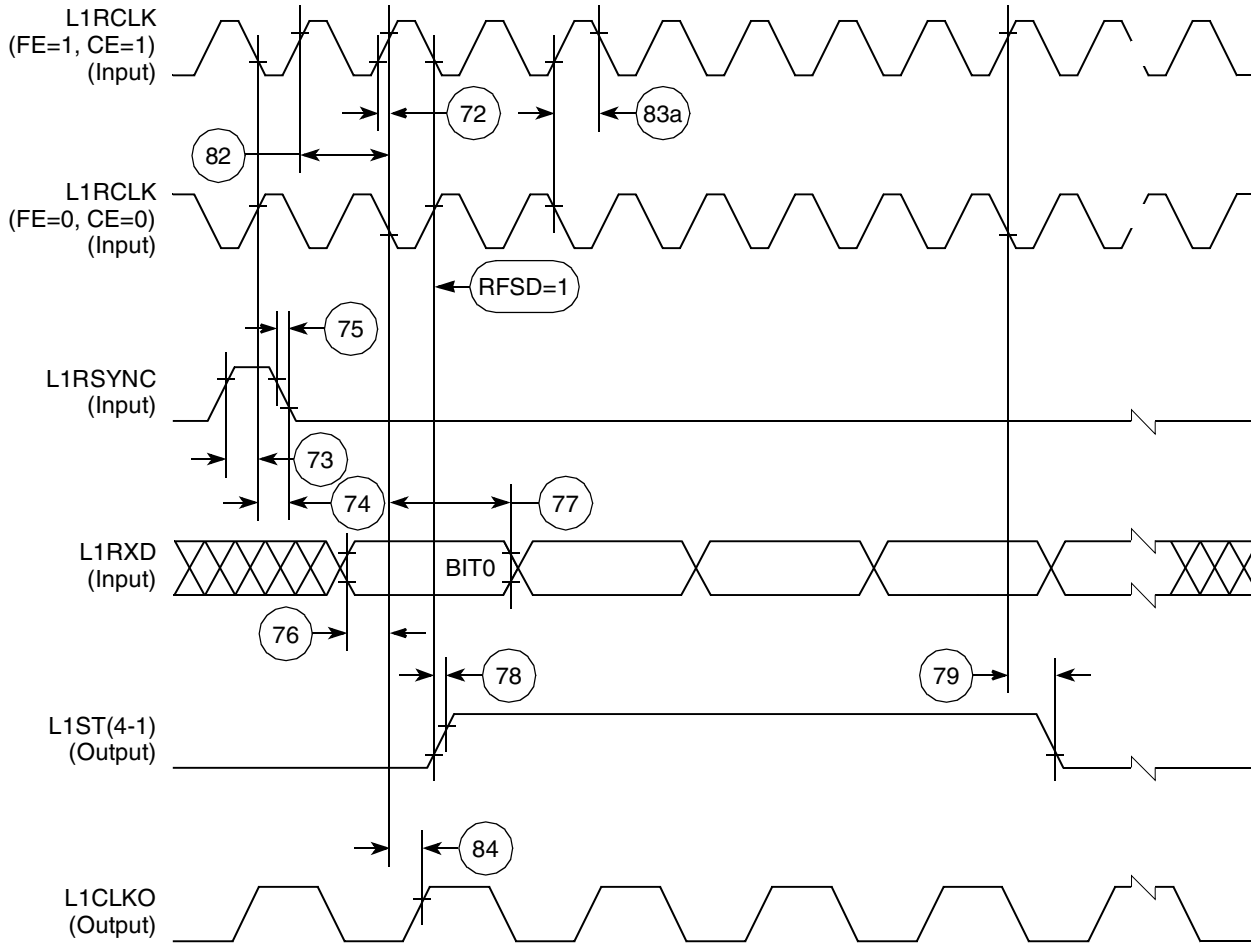

Figure 46. SI Receive Timing with Double-Speed Clocking (DSC = 1)

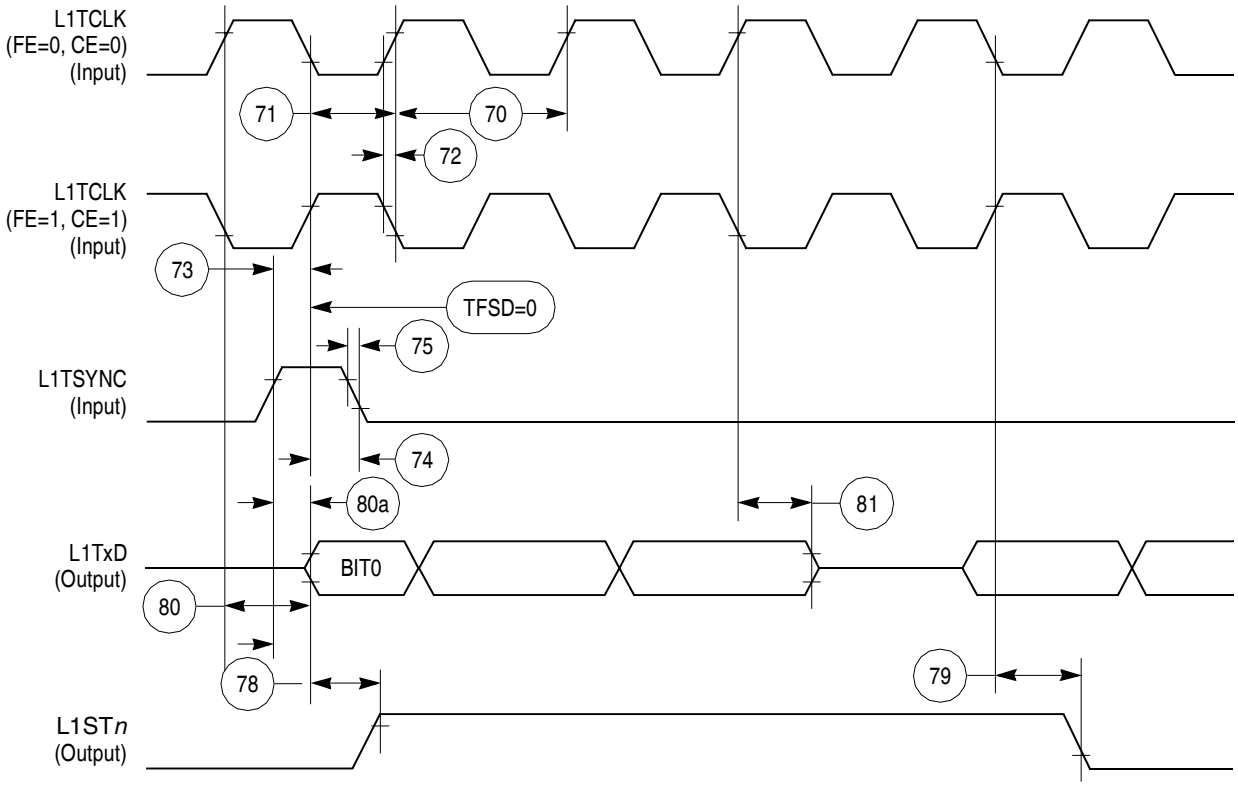

Figure 47. SI Transmit Timing Diagram

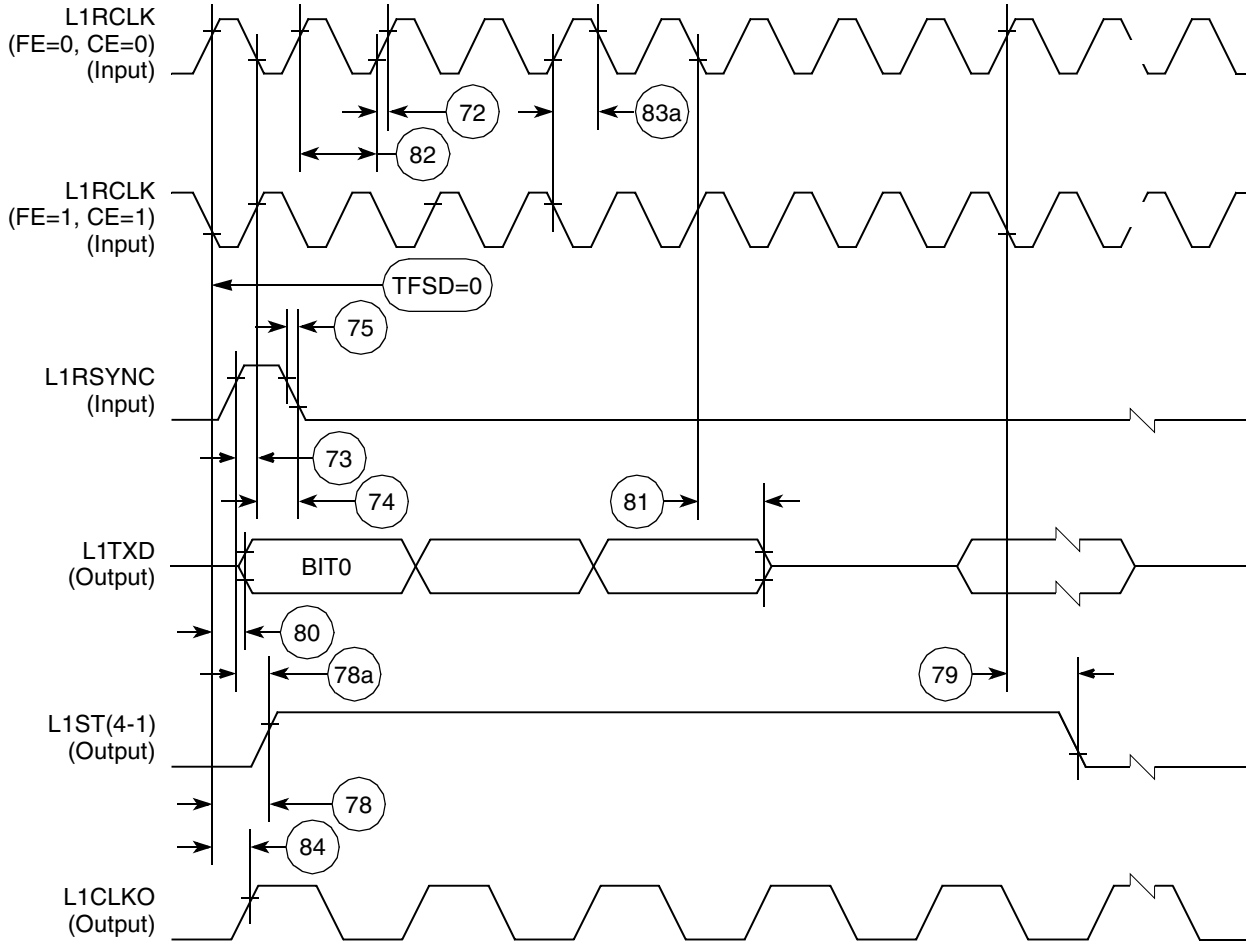

Figure 48. SI Transmit Timing with Double Speed Clocking (DSC = 1)

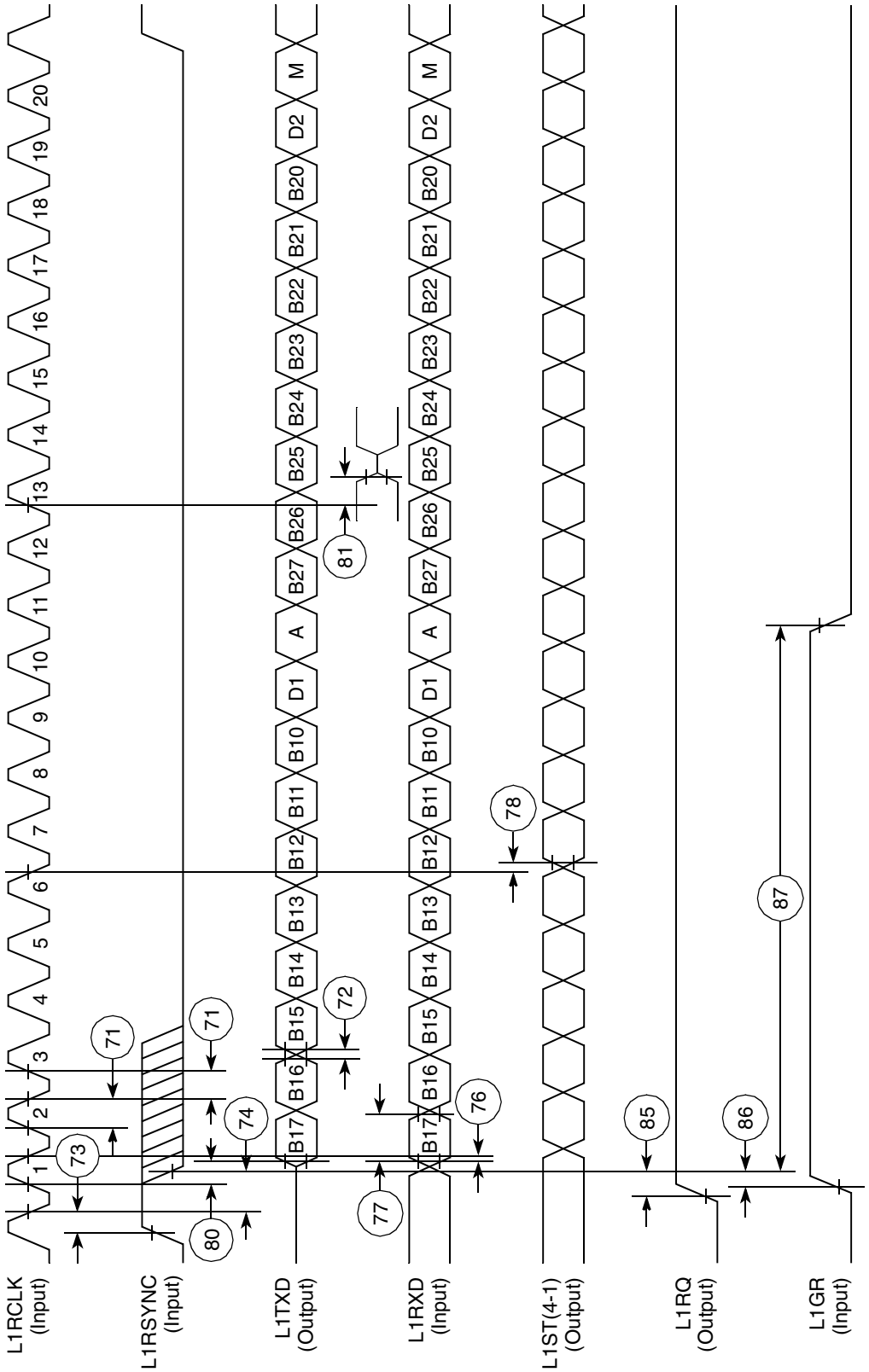

Figure 49. IDL Timing

8.6 SCC in NMSI Mode Electrical Specifications

Table 18 provides the NMSI external clock timing.

Table 18. NMSI External Clock Timing

Num	Characteristic	All Frequencies		Unit
		Min	Max	
100	RCLKx and TCLKx frequency [1] (x = 2, 3 for all specs in this table)	1/SYNCCLK	—	ns
101	RCLKx and TCLKx width low	1/SYNCCLK +5	—	ns
102	RCLKx and TCLKx rise/fall time	—	15.00	ns
103	TXDx active delay (from TCLKx falling edge)	0.00	50.00	ns
104	$\overline{\text{RTSx}}$ active/inactive delay (from TCLKx falling edge)	0.00	50.00	ns
105	$\overline{\text{CTSx}}$ setup time to TCLKx rising edge	5.00	—	ns
106	RXDx setup time to RCLKx rising edge	5.00	—	ns
107	RXDx hold time from RCLKx rising edge [2]	5.00	—	ns
108	$\overline{\text{CDx}}$ setup time to RCLKx rising edge	5.00	—	ns

1 The ratios SyncCLK/RCLKx and SyncCLK/TCLKx must be greater than or equal to 2.25/1.

2 Also applies to $\overline{\text{CD}}$ and $\overline{\text{CTS}}$ hold time when they are used as an external sync signal.

Table 19 provides the NMSI internal clock timing.

Table 19. NMSI Internal Clock Timing

Num	Characteristic	All Frequencies		Unit
		Min	Max	
100	RCLKx and TCLKx frequency [1] (x = 2, 3 for all specs in this table)	0.00	SYNCCLK/3	MHz
102	RCLKx and TCLKx rise/fall time	—	—	ns
103	TXDx active delay (from TCLKx falling edge)	0.00	30.00	ns
104	$\overline{\text{RTSx}}$ active/inactive delay (from TCLKx falling edge)	0.00	30.00	ns
105	$\overline{\text{CTSx}}$ setup time to TCLKx rising edge	40.00	—	ns
106	RXDx setup time to RCLKx rising edge	40.00	—	ns
107	RXDx hold time from RCLKx rising edge [2]	0.00	—	ns
108	$\overline{\text{CDx}}$ setup time to RCLKx rising edge	40.00	—	ns

1 The ratios SyncCLK/RCLKx and SyncCLK/TCLK1x must be greater or equal to 3/1.

2 Also applies to $\overline{\text{CD}}$ and $\overline{\text{CTS}}$ hold time when they are used as an external sync signals.

Figure 50 through Figure 52 show the NMSI timings.

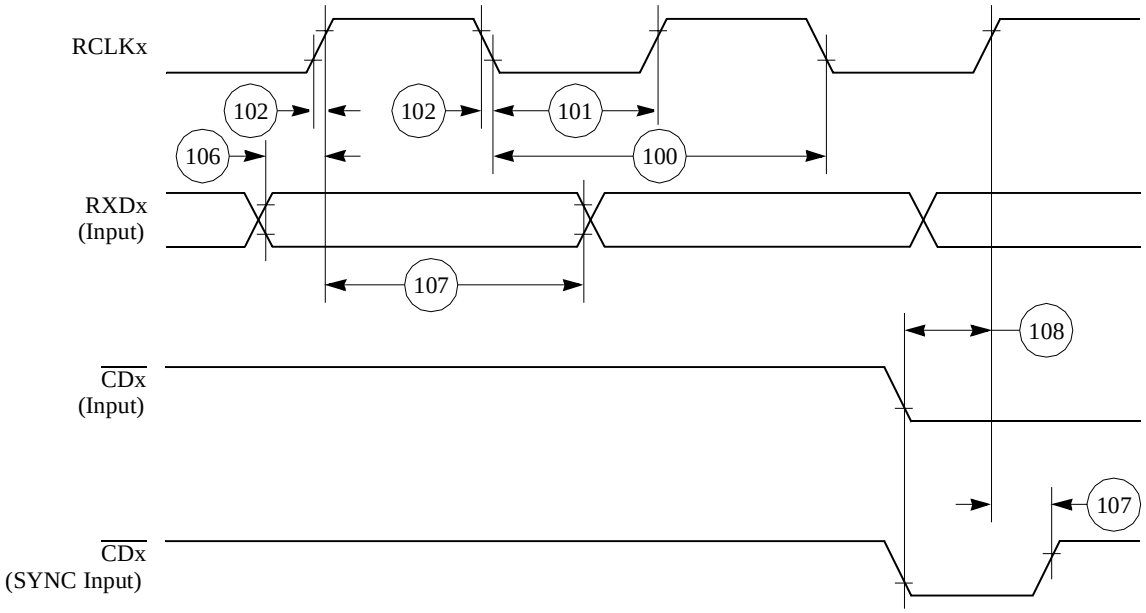

Figure 50. SCC NMSI Receive Timing Diagram

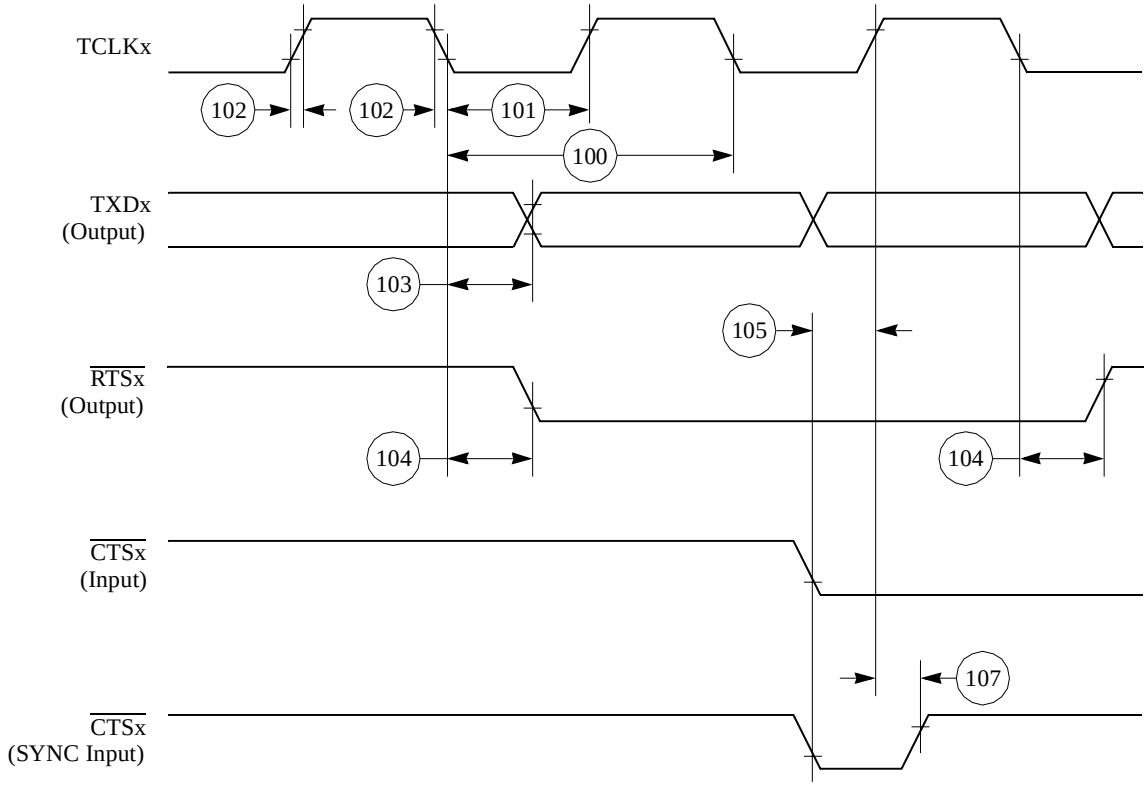

Figure 51. SCC NMSI Transmit Timing Diagram

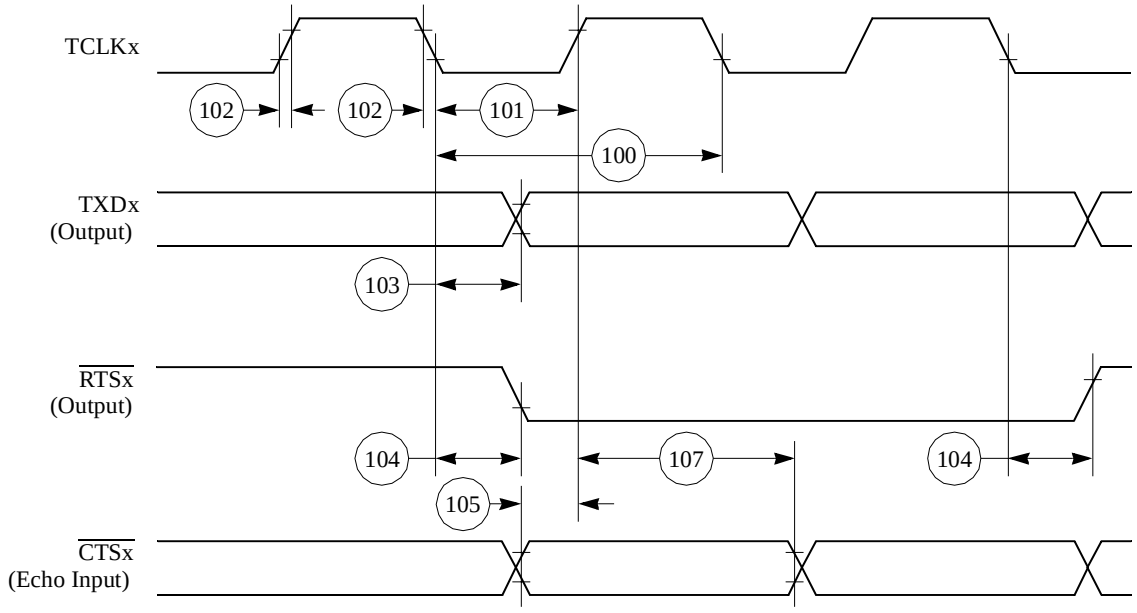

Figure 52. HDLC Bus Timing Diagram

8.7 Ethernet Electrical Specifications

Table 20 provides the Ethernet timings as shown in Figure 53 to Figure 55.

Table 20. Ethernet Timing

Num	Characteristic	All Frequencies		Unit
		Min	Max	
120	CLSN width high	40.00	—	ns
121	RCLKx rise/fall time (x = 2, 3 for all specs in this table)	—	15.00	ns
122	RCLKx width low	40.00	—	ns
123	RCLKx clock period [1]	80.00	120.00	ns
124	RXDx setup time	20.00	—	ns
125	RXDx hold time	5.00	—	ns
126	RENA active delay (from RCLKx rising edge of the last data bit)	10.00	—	ns
127	RENA width low	100.00	—	ns
128	TCLKx rise/fall time	—	15.00	ns
129	TCLKx width low	40.00	—	ns
130	TCLKx clock period[1]	99.00	101.00	ns
131	TXDx active delay (from TCLKx rising edge)	10.00	50.00	ns
132	TXDx inactive delay (from TCLKx rising edge)	10.00	50.00	ns
133	TENA active delay (from TCLKx rising edge)	10.00	50.00	ns

Table 20. Ethernet Timing (continued)

Num	Characteristic	All Frequencies		Unit
		Min	Max	
134	TENA inactive delay (from TCLKx rising edge)	10.00	50.00	ns
138	CLKOUT low to $\overline{\text{SDACK}}$ asserted [2]	—	20.00	ns
139	CLKOUT low to $\overline{\text{SDACK}}$ negated [2]	—	20.00	ns

1 The ratios SyncCLK/RCLKx and SyncCLK/TCLKx must be greater or equal to 2/1.

2 $\overline{\text{SDACK}}$ is asserted whenever the SDMA writes the incoming frame destination address into memory.

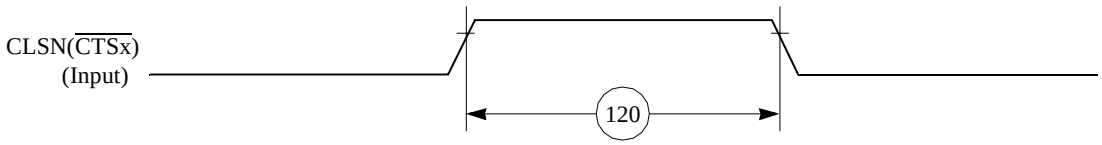

Figure 53. Ethernet Collision Timing Diagram

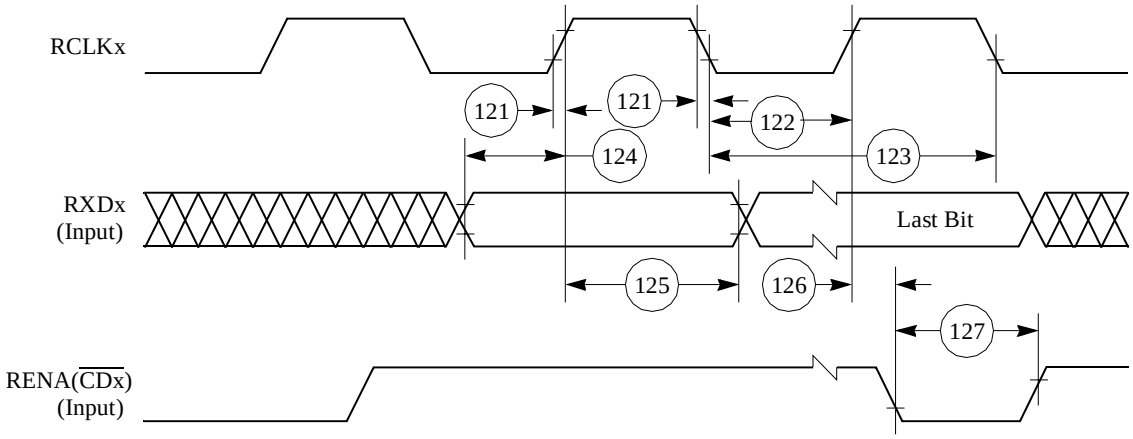

Figure 54. Ethernet Receive Timing Diagram

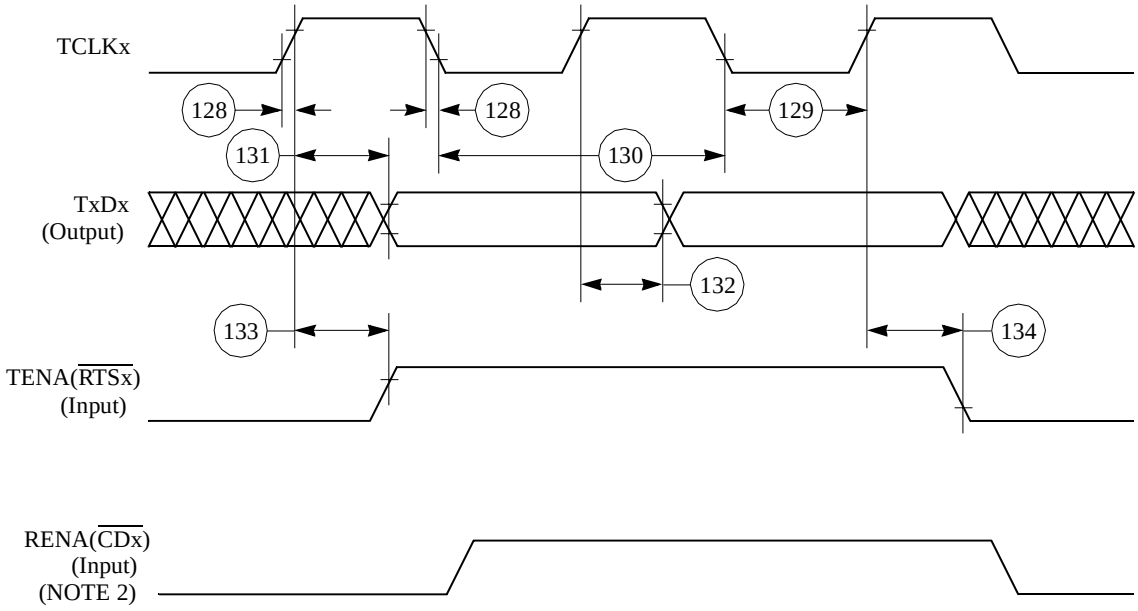

NOTES:
1. Transmit clock invert (TCI) bit in GSMR is set.
2. If RENA is deasserted before TENA, or RENA is not asserted at all during transmit, then the CSL bit is set in the buffer descriptor at the end of the frame transmission.

Figure 55. Ethernet Transmit Timing Diagram

8.8 SMC Transparent AC Electrical Specifications

Figure 21 provides the SMC transparent timings as shown in Figure 56.

Table 21. Serial Management Controller Timing

Num	Characteristic	All Frequencies		Unit
		Min	Max	
150	SMCLKx clock period [1]	100.00	—	ns
151	SMCLKx width low	50.00	—	ns
151a	SMCLKx width high	50.00	—	ns
152	SMCLKx rise/fall time	—	15.00	ns
153	SMTXDx active delay (from SMCLKx falling edge)	10.00	50.00	ns
154	SMRXDx/SMSYNx setup time	20.00	—	ns
155	SMRXDx/SMSYNx hold time	5.00	—	ns

[1] The ratio SyncCLK/SMCLKx must be greater or equal to 2/1.

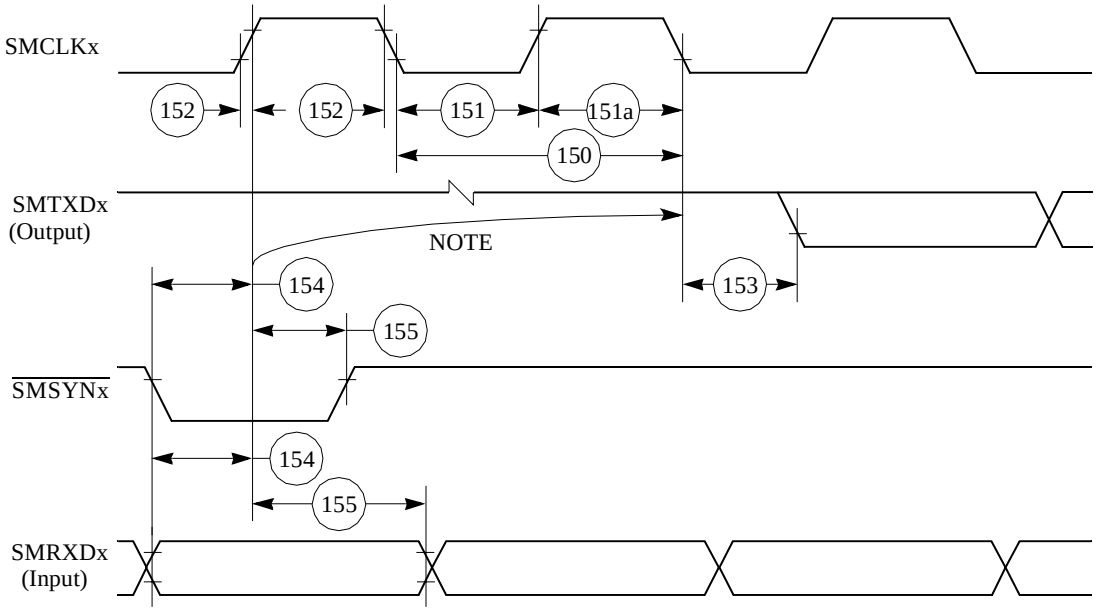

NOTE:
1. This delay is equal to an integer number of character-length clocks.

Figure 56. SMC Transparent Timing Diagram

8.9 SPI Master AC Electrical Specifications

Table 22 provides the SPI master timings as shown in Figure 57 and Figure 58.

Table 22. SPI Master Timing

Num	Characteristic	All Frequencies		Unit
		Min	Max	
160	MASTER cycle time	4	1024	t_{cyc}
161	MASTER clock (SCK) high or low time	2	512	t_{cyc}
162	MASTER data setup time (inputs)	50.00	—	ns
163	Master data hold time (inputs)	0.00	—	ns
164	Master data valid (after SCK edge)	—	20.00	ns
165	Master data hold time (outputs)	0.00	—	ns
166	Rise time output	—	15.00	ns
167	Fall time output	—	15.00	ns

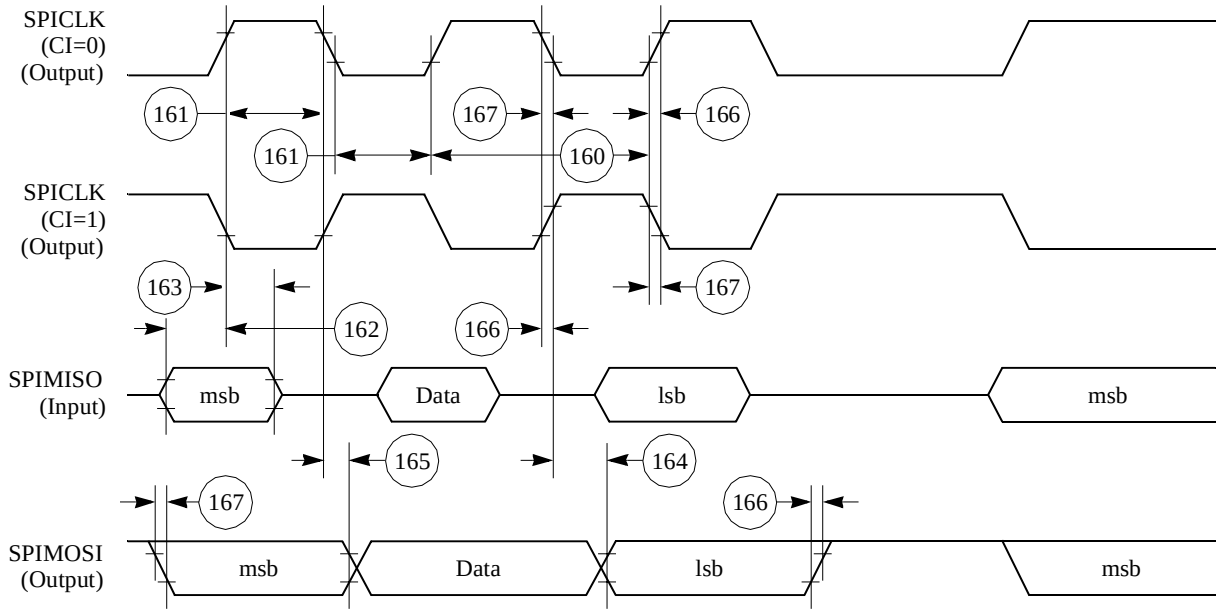

Figure 57. SPI Master (CP = 0) Timing Diagram

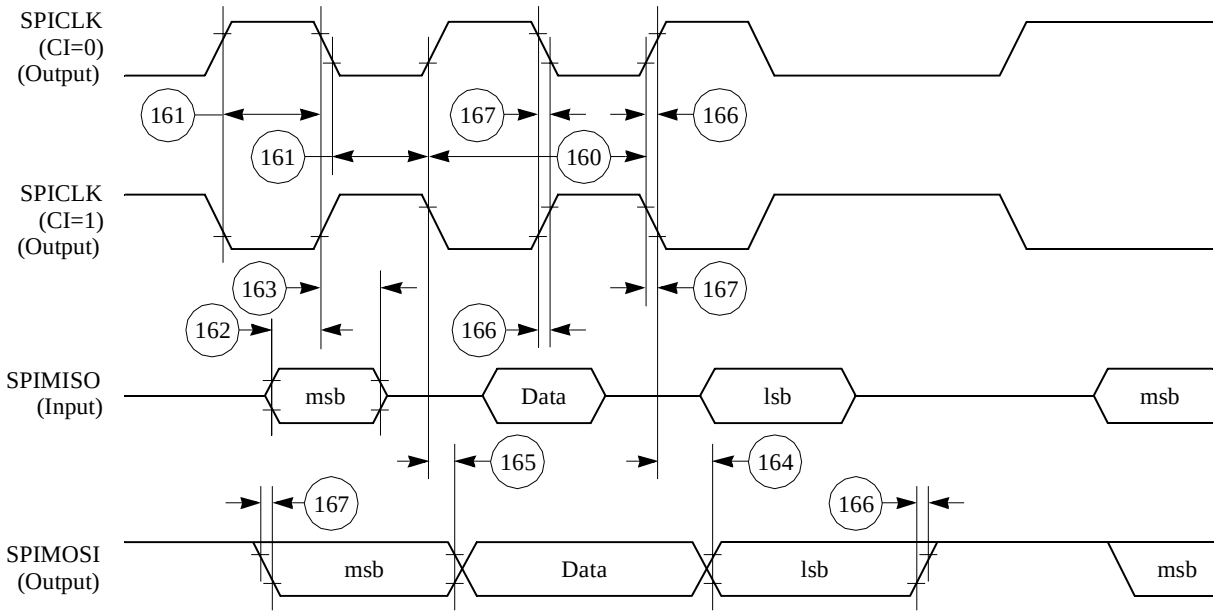

Figure 58. SPI Master (CP = 1) Timing Diagram

8.10 SPI Slave AC Electrical Specifications

Table 23 provides the SPI slave timings as shown in Figure 59 and Figure 60.

Table 23. SPI Slave Timing

Num	Characteristic	All Frequencies		Unit
		Min	Max	
170	Slave cycle time	2	—	t_{cyc}
171	Slave enable lead time	15.00	—	ns
172	Slave enable lag time	15.00	—	ns
173	Slave clock (SPICLK) high or low time	1	—	t_{cyc}
174	Slave sequential transfer delay (does not require deselect)	1	—	t_{cyc}
175	Slave data setup time (inputs)	20.00	—	ns
176	Slave data hold time (inputs)	20.00	—	ns
177	Slave access time	—	50.00	ns
178	Slave SPI MISO disable time	—	50.00	ns
179	Slave data valid (after SPICLK edge)	—	50.00	ns
180	Slave data hold time (outputs)	0.00	—	ns
181	Rise time (input)	—	15.00	ns
182	Fall time (input)	—	15.00	ns

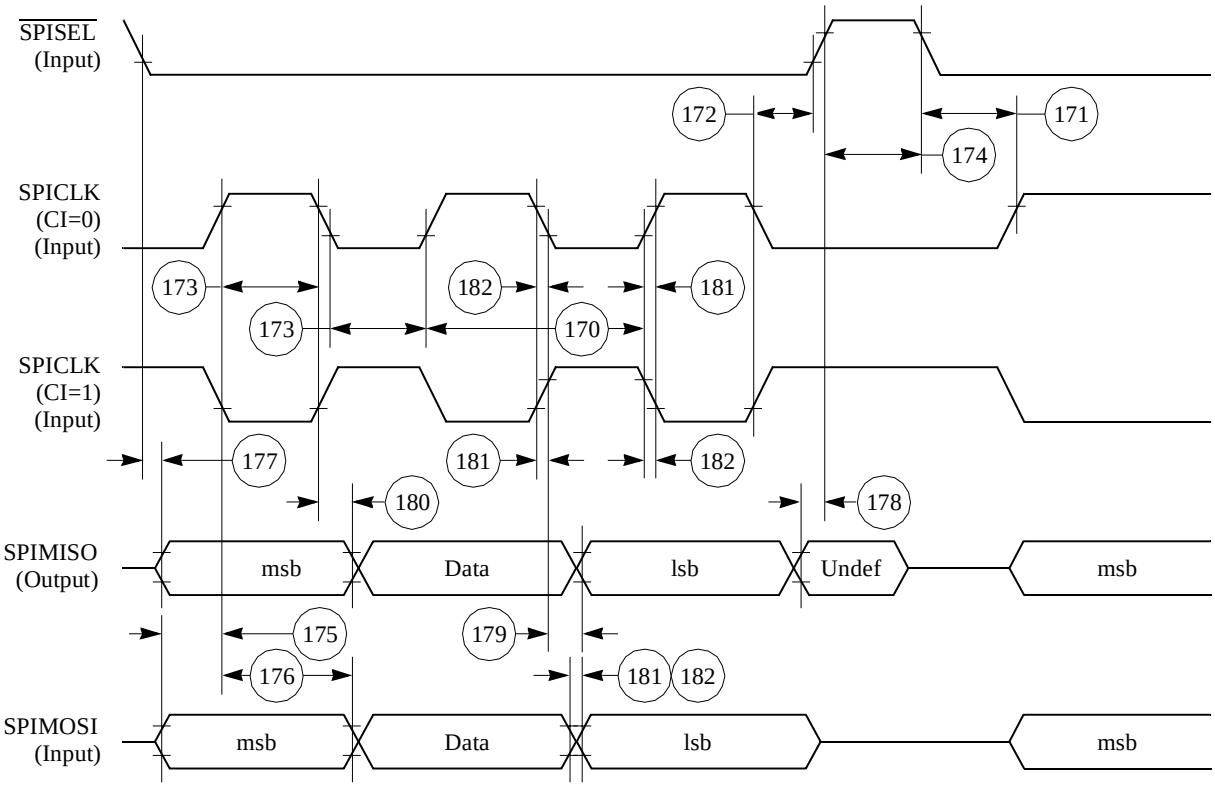

Figure 59. SPI Slave (CP = 0) Timing Diagram

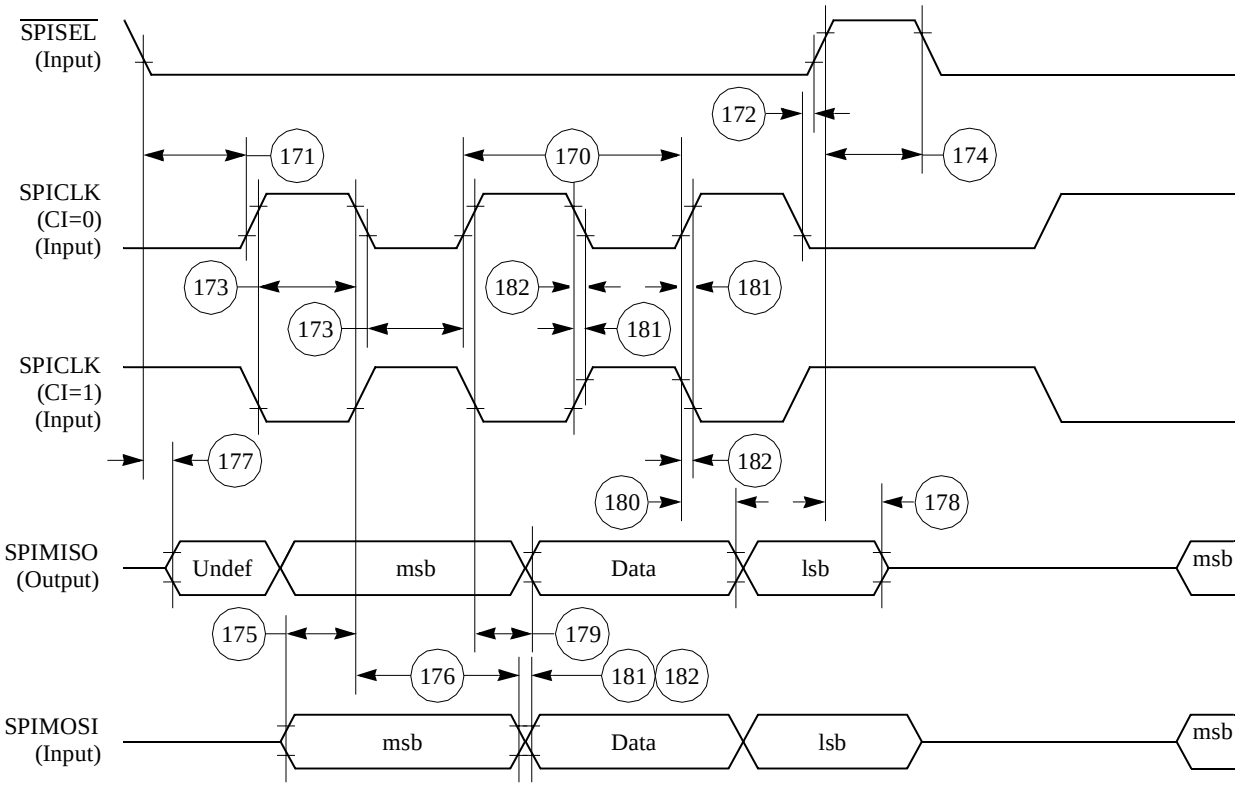

Figure 60. SPI Slave (CP = 1) Timing Diagram

8.11 I²C AC Electrical Specifications

Table 24 provides the I²C (SCL < 100 KHz) timings.

Table 24. I²C Timing (SCL < 100 KHz)

Num	Characteristic	All Frequencies		Unit
		Min	Max	
200	SCL clock frequency (slave)	0.00	100.00	KHz
200	SCL clock frequency (master) [1]	1.50	100.00	KHz
202	Bus free time between transmissions	4.70	—	µs
203	Low period of SCL	4.70	—	µs
204	High period of SCL	4.00	—	µs
205	Start condition setup time	4.70	—	µs
206	Start condition hold time	4.00	—	µs
207	Data hold time	0.00	—	µs
208	Data setup time	250.00	—	ns
209	SDL/SCL rise time	—	1.00	µs

Table 24. I²C Timing (SCL < 100 KHz) (CONTINUED)

Num	Characteristic	All Frequencies		Unit
		Min	Max	
210	SDL/SCL fall time	—	300.00	ns
211	Stop condition setup time	4.70	—	µs

1 SCL frequency is given by SCL = BRGCLK_frequency / ((BRG register + 3) * pre_scaler * 2). The ratio SyncClk/(BRGCLK/pre_scaler) must be greater or equal to 4/1.

Table 25 provides the I²C (SCL > 100 KHz) timings.

Table 25. I²C Timing (SCL > 100 KHz)

Num	Characteristic	Expression	All Frequencies		Unit
			Min	Max	
200	SCL clock frequency (slave)	fSCL	0	BRGCLK/48	Hz
200	SCL clock frequency (master) [1]	fSCL	BRGCLK/16512	BRGCLK/48	Hz
202	Bus free time between transmissions		1/(2.2 * fSCL)	—	s
203	Low period of SCL		1/(2.2 * fSCL)	—	s
204	High period of SCL		1/(2.2 * fSCL)	—	s
205	Start condition setup time		1/(2.2 * fSCL)	—	s
206	Start condition hold time		1/(2.2 * fSCL)	—	s
207	Data hold time		0	—	s
208	Data setup time		1/(40 * fSCL)	—	s
209	SDL/SCL rise time		—	1/(10 * fSCL)	s
210	SDL/SCL fall time		—	1/(33 * fSCL)	s
211	Stop condition setup time		1/2(2.2 * fSCL)	—	s

1 SCL frequency is given by SCL = BrgClk_frequency / ((BRG register + 3) * pre_scaler * 2). The ratio SyncClk/(Brg_Clk/pre_scaler) must be greater or equal to 4/1.

Figure 61 shows the I²C bus timing.

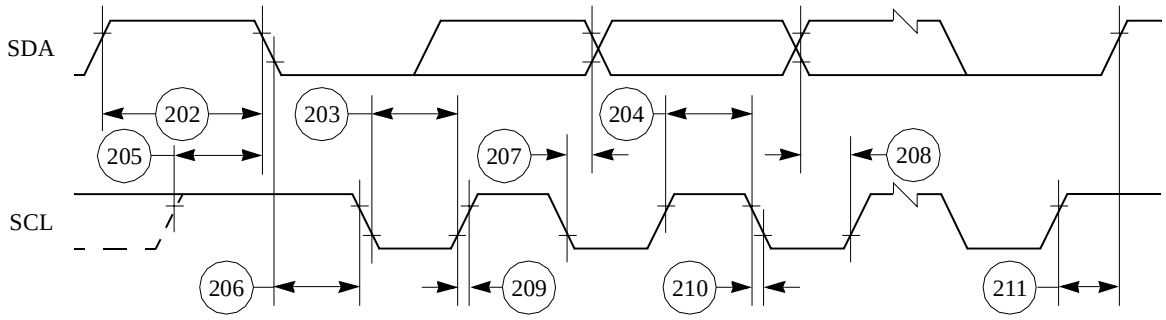

Figure 61. I²C Bus Timing Diagram

9 Mechanical Data and Ordering Information

Table 26 provides information on the MPC850 derivative devices.

Table 26. MPC850 Family Derivatives

Device	Ethernet Support	Number of SCCs [1]	32-Channel HDLC Support	64-Channel HDLC Support [2]
MPC850	N/A	One	N/A	N/A
MPC850DE	Yes	Two	N/A	N/A
MPC850SR	Yes	Two	N/A	Yes
MPC850DSL	Yes	Two	No	No

1 Serial Communication Controller (SCC)

2 50 MHz version supports 64 time slots on a time division multiplexed line using one SCC

Table 27 identifies the packages and operating frequencies available for the MPC850.

Table 27. MPC850 Package/Frequency/Availability

Package Type	Frequency (MHz)	Temperature (Tj)	Order Number
256-Lead Plastic Ball Grid Array (ZT suffix)	50	0°C to 95°C	XPC850ZT50BU XPC850DEZT50BU XPC850SRZT50BU XPC850DSLZT50BU
	66	0°C to 95°C	XPC850ZT66BU XPC850DEZT66BU XPC850SRZT66BU
	80	0°C to 95°C	XPC850ZT80BU XPC850DEZT80BU XPC850SRZT80BU
256-Lead Plastic Ball Grid Array (CZT suffix)	50	-40°C to 95°C	XPC850CZT50BU XPC850DECZT50BU XPC850SRCZT50BU XPC850DSLCZT50BU
	66		XPC850CZT66BU XPC850DECZT66BU XPC850SRCZT66BU
	80		XPC850CZT80B XPC850DECZT80B XPC850SRCZT80B

9.1 Pin Assignments and Mechanical Dimensions of the PBGA

The original pin numbering of the MPC850 conformed to a Freescale proprietary pin numbering scheme that has since been replaced by the JEDEC pin numbering standard for this package type. To support

customers that are currently using the non-JEDEC pin numbering scheme, two sets of pinouts, JEDEC and non-JEDEC, are presented in this document.

Figure 62 shows the non-JEDEC pinout of the PBGA package as viewed from the top surface.

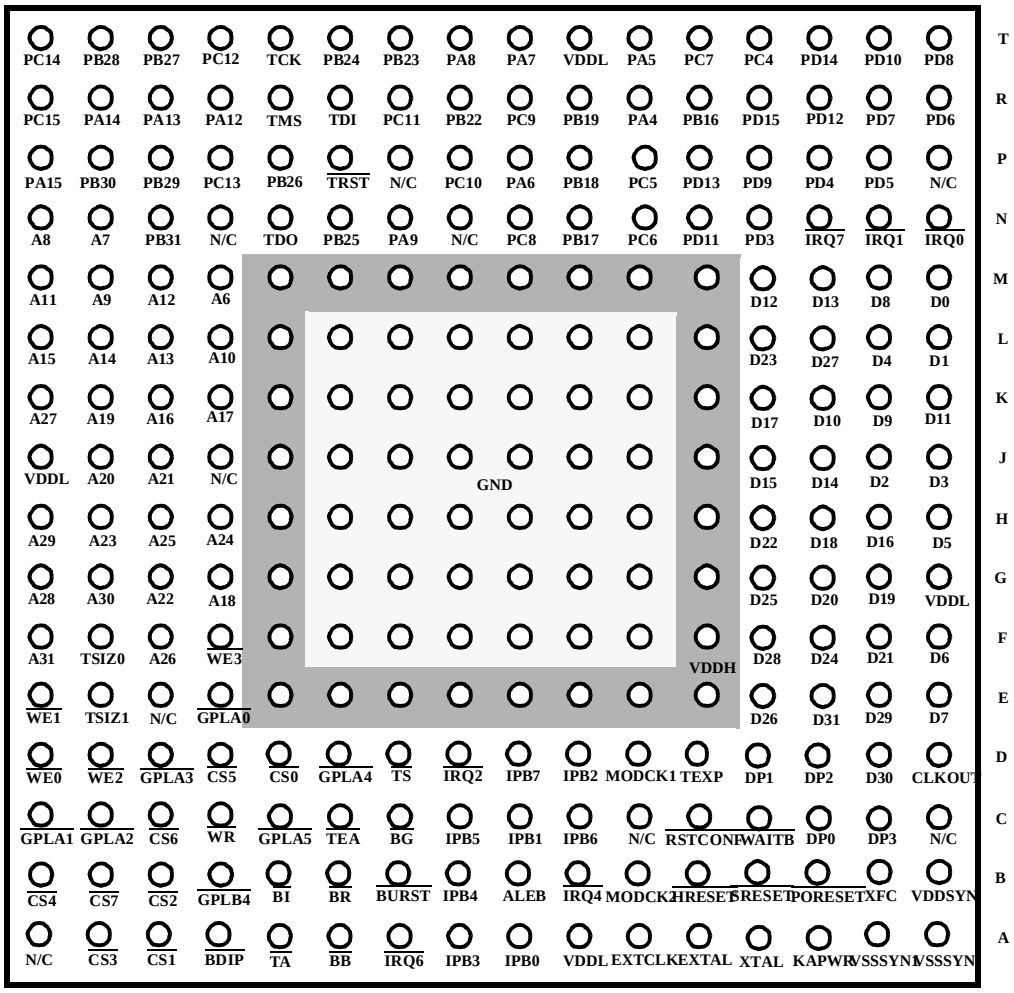

Figure 62. Pin Assignments for the PBGA (Top View)—non-JEDEC Standard

Figure 63 shows the JEDEC pinout of the PBGA package as viewed from the top surface.

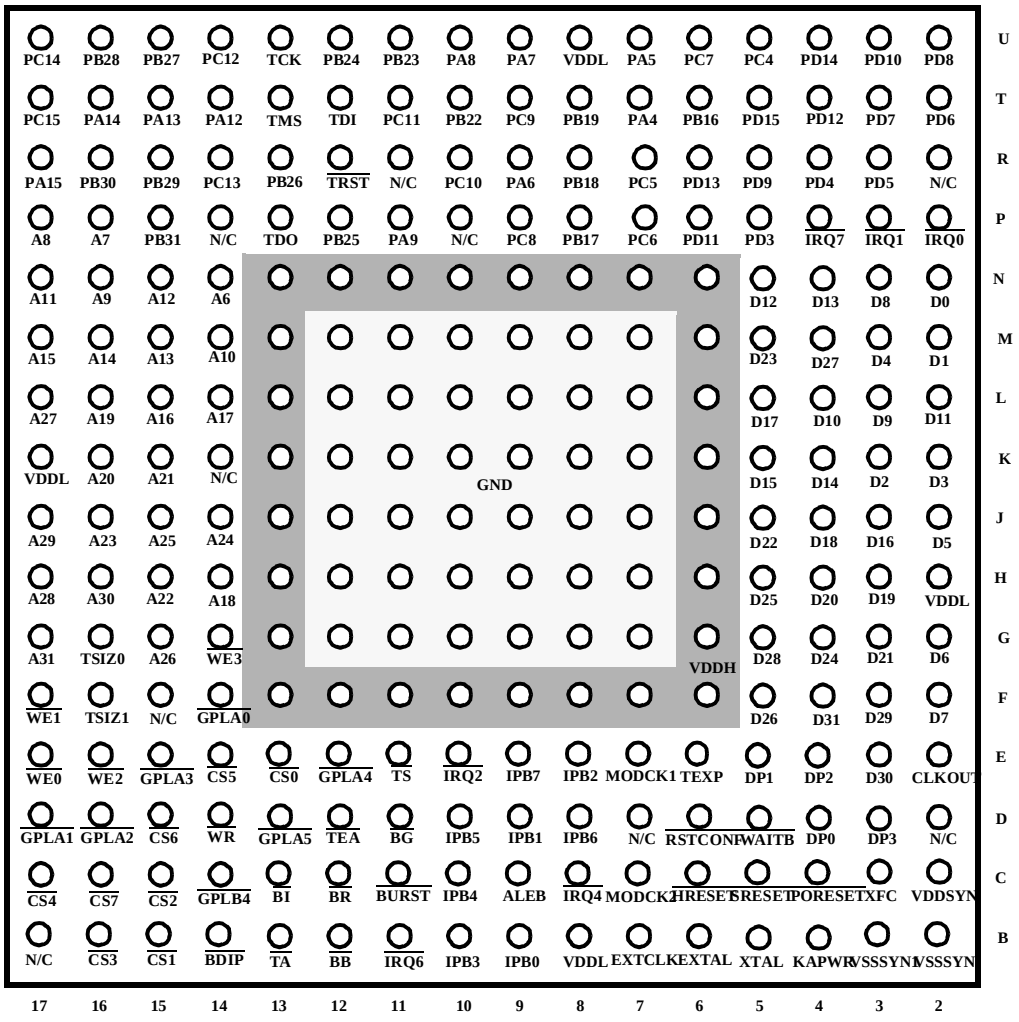

Figure 63. Pin Assignments for the PBGA (Top View)—JEDEC Standard

For more information on the printed circuit board layout of the PBGA package, including thermal via design and suggested pad layout, please refer to AN-1231/D, Plastic Ball Grid Array Application Note available from your local Freescale sales office.

Figure 64 shows the non-JEDEC package dimensions of the PBGA.

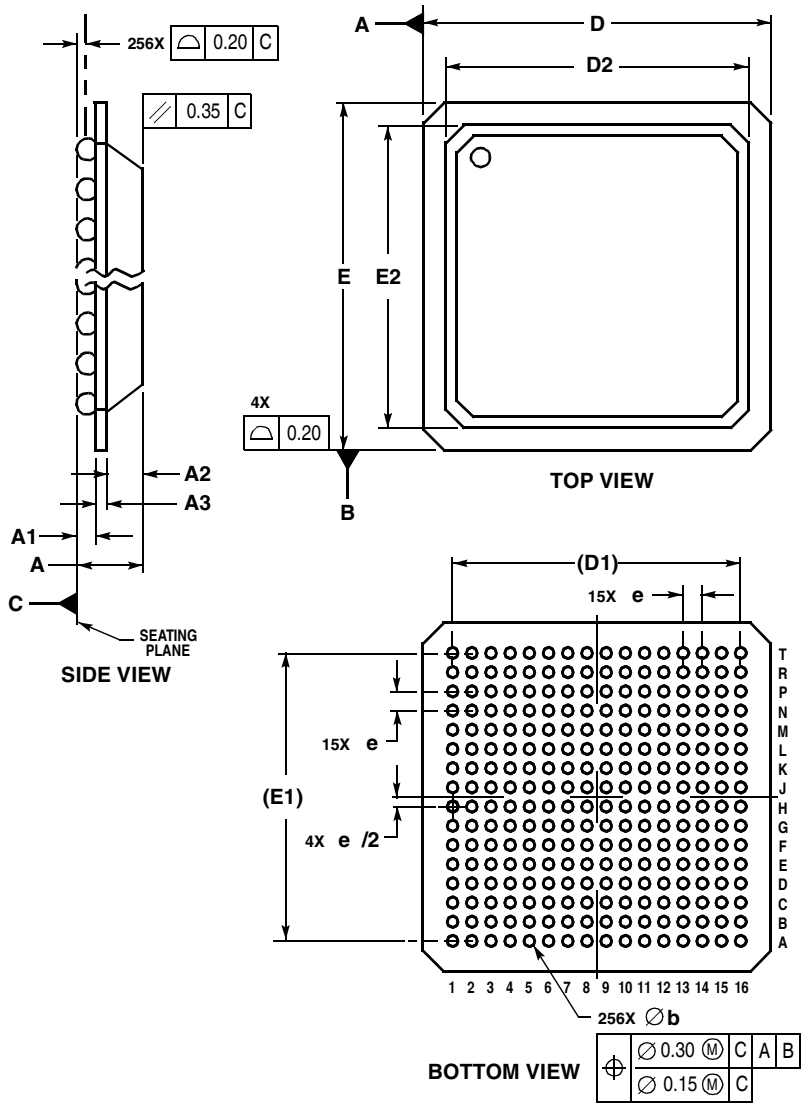

NOTES:
1. DIMENSIONING AND TOLERANCING PER ASME Y14.5M, 1994.
2. DIMENSIONS IN MILLIMETERS.
3. DIMENSION b IS MEASURED AT THE MAXIMUM SOLDER BALL DIAMETER, PARALLEL TO PRIMARY DATUM C.
4. PRIMARY DATUM C AND THE SEATING PLANE ARE

	MILLIMETERS	
DIM	MIN	MAX
A	1.91	2.35
A1	0.50	0.70
A2	1.12	1.22
A3	0.29	0.43
b	0.60	0.90
D	23.00 BSC	
D1	19.05 REF	
D2	19.00	20.00
E	23.00 BSC	
E1	19.05 REF	
E2	19.00	20.00
e	1.27 BSC	

Figure 64. Package Dimensions for the Plastic Ball Grid Array (PBGA)—non-JEDEC Standard

Figure 65 shows the JEDEC package dimensions of the PBGA.

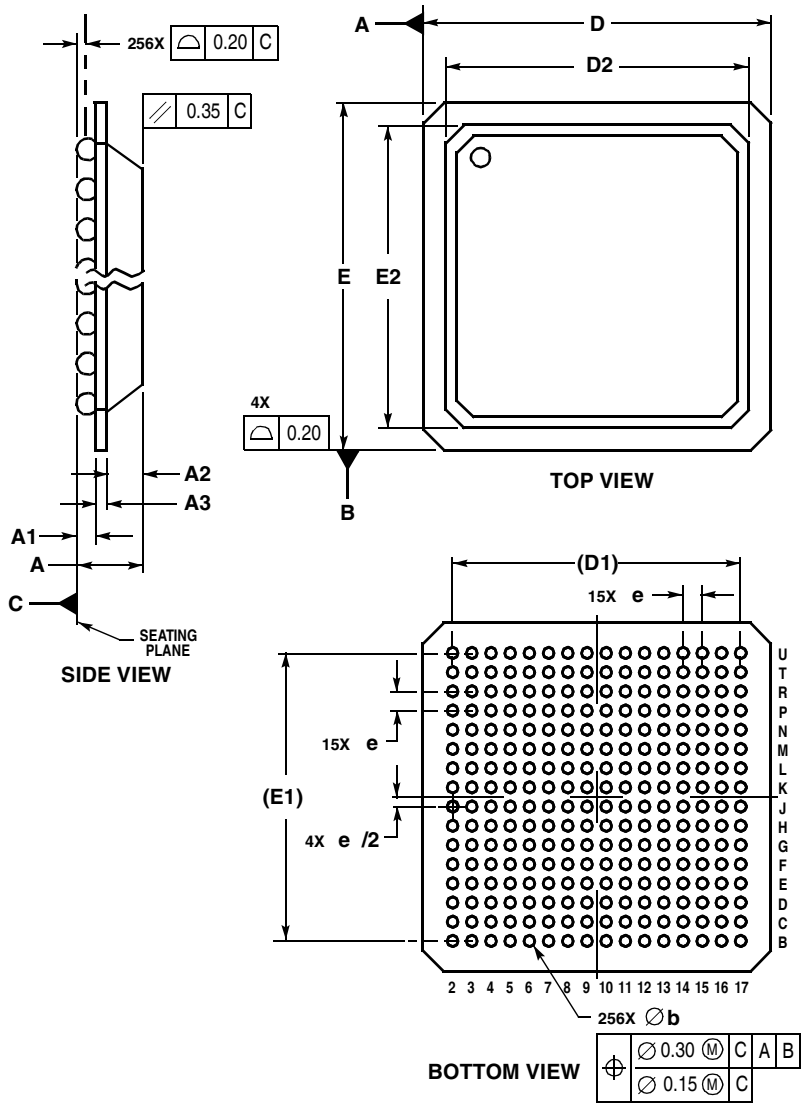

NOTES:
1. DIMENSIONING AND TOLERANCING PER ASME Y14.5M, 1994.
2. DIMENSIONS IN MILLIMETERS.
3. DIMENSION b IS MEASURED AT THE MAXIMUM SOLDER BALL DIAMETER, PARALLEL TO PRIMARY DATUM C.
4. PRIMARY DATUM C AND THE SEATING PLANE ARE

	MILLIMETERS	
DIM	MIN	MAX
A	1.91	2.35
A1	0.50	0.70
A2	1.12	1.22
A3	0.29	0.43
b	0.60	0.90
D	23.00 BSC	
D1	19.05 REF	
D2	19.00	20.00
E	23.00 BSC	
E1	19.05 REF	
E2	19.00	20.00
e	1.27 BSC	

CASE 1130-01
ISSUE B

Figure 65. Package Dimensions for the Plastic Ball Grid Array (PBGA)—JEDEC Standard

10 Document Revision History

Table 28 lists significant changes between revisions of this document.

Table 28. Document Revision History

Revision	Date	Change
2	7/2005	Added footnote 3 to Table 5 (previously Table 4.5) and deleted IOL limit.
1	10/2002	Added MPC850DSL. Corrected Figure 25 on page 34.
0.2	04/2002	Updated power numbers and added Rev. C
0.1	11/2001	Removed reference to 5 Volt tolerance capability on peripheral interface pins. Replaced SI and IDL timing diagrams with better images. Updated to new template, added this revision table.

THIS PAGE INTENTIONALLY LEFT BLANK

THIS PAGE INTENTIONALLY LEFT BLANK

THIS PAGE INTENTIONALLY LEFT BLANK

How to Reach Us:

Home Page:
www.freescale.com

email:
support@freescale.com

USA/Europe or Locations Not Listed:
Freescale Semiconductor
Technical Information Center, CH370
1300 N. Alma School Road
Chandler, Arizona 85224
(800) 521-6274
480-768-2130
support@freescale.com

Europe, Middle East, and Africa:
Freescale Halbleiter Deutschland GmbH
Technical Information Center
Schatzbogen 7
81829 Muenchen, Germany
+44 1296 380 456 (English)
+46 8 52200080 (English)
+49 89 92103 559 (German)
+33 1 69 35 48 48 (French)
support@freescale.com

Japan:
Freescale Semiconductor Japan Ltd.
Headquarters
ARCO Tower 15F
1-8-1, Shimo-Meguro, Meguro-ku
Tokyo 153-0064, Japan
0120 191014
+81 2666 8080
support.japan@freescale.com

Asia/Pacific:
Freescale Semiconductor Hong Kong Ltd.
Technical Information Center
2 Dai King Street
Tai Po Industrial Estate,
Tai Po, N.T., Hong Kong
+800 2666 8080
support.asia@freescale.com

For Literature Requests Only:
Freescale Semiconductor
Literature Distribution Center
P.O. Box 5405
Denver, Colorado 80217
(800) 441-2447
303-675-2140
Fax: 303-675-2150
LDCForFreescaleSemiconductor
@hibbertgroup.com

Information in this document is provided solely to enable system and software implementers to use Freescale Semiconductor products. There are no express or implied copyright licenses granted hereunder to design or fabricate any integrated circuits or integrated circuits based on the information in this document.

Freescale Semiconductor reserves the right to make changes without further notice to any products herein. Freescale Semiconductor makes no warranty, representation or guarantee regarding the suitability of its products for any particular purpose, nor does Freescale Semiconductor assume any liability arising out of the application or use of any product or circuit, and specifically disclaims any and all liability, including without limitation consequential or incidental damages. “Typical” parameters which may be provided in Freescale Semiconductor data sheets and/or specifications can and do vary in different applications and actual performance may vary over time. All operating parameters, including “Typicals” must be validated for each customer application by customer’s technical experts. Freescale Semiconductor does not convey any license under its patent rights nor the rights of others. Freescale Semiconductor products are not designed, intended, or authorized for use as components in systems intended for surgical implant into the body, or other applications intended to support or sustain life, or for any other application in which the failure of the Freescale Semiconductor product could create a situation where personal injury or death may occur. Should Buyer purchase or use Freescale Semiconductor products for any such unintended or unauthorized application, Buyer shall indemnify and hold Freescale Semiconductor and its officers, employees, subsidiaries, affiliates, and distributors harmless against all claims, costs, damages, and expenses, and reasonable attorney fees arising out of, directly or indirectly, any claim of personal injury or death associated with such unintended or unauthorized use, even if such claim alleges that Freescale Semiconductor was negligent regarding the design or manufacture of the part.

Freescale™ and the Freescale logo are trademarks of Freescale Semiconductor, Inc. All other product or service names are the property of their respective owners.

© Freescale Semiconductor, Inc., 2005.

Document Number: MPC850EC
Rev. 2
07/2005

freescale™
semiconductor

Looking for pricing, stock, or lifecycle information?

Click below to explore more details on WIN SOURCE:

- View XPC850DEVR80BU on WIN SOURCE
- NXP / Nexperia Information

Optimize Your Supply Chain with WIN SOURCE Solutions

- Global Sourcing Solution
- Obsolete Management
- Cost Control Management
- Shortage Management
- Alternative Solution
- Excess Inventory Management