THE DATASHEET OF

MPSA43

FAIRCHILD
SEMICONDUCTOR®

MPSA43

NPN High Voltage Amplifier

- This device is designed for application as a video output to drive color CRT and other high voltage applications.
- Sourced from process 48.
- See MPSA42 for characteristics.

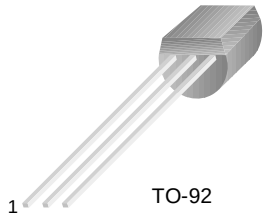

TO-92

1. Emitter 2. Base 3. Collector

Absolute Maximum Ratings * T_A=25°C unless otherwise noted

Symbol	Parameter	Value	Units
V_{CES}	Collector-Emitter Voltage	200	V
V_{CBO}	Collector-Base Voltage	200	V
V_{EBO}	Emitter-Base Voltage	6.0	V
I_C	Collector Current - Continuous	200	mA
T_J, T_{STG}	Operating and Storage Junction Temperature Range	-55 ~ +150	°C

* These ratings are limiting values above which the serviceability of any semiconductor device may be impaired.

NOTES:
1. These ratings are based on a maximum junction temperature of 150 degrees C.
2. These are steady state limits. The factory should be consulted on applications involving pulsed or low duty cycle operations.

Electrical Characteristics T_A=25°C unless otherwise noted

Symbol	Parameter	Test Condition	Min.	Max.	Units
Off Characteristics					
$V_{(BR)CEO}$	Collector-Emitter Breakdown Voltage *	I_C = 1.0mA, I_B = 0	200		V
$V_{(BR)CBO}$	Collector-Base Breakdown Voltage	I_C = 100µA, I_E = 0	200		V
$V_{(BR)EBO}$	Emitter-Base Breakdown Voltage	I_C = 100µA, I_C = 0	6.0		V
I_{CBO}	Collector Cutoff Current	V_{CB} = 160V, I_E = 0		0.1	µA
I_{EBO}	Emitter Cutoff Current	V_{EB} = 4.0V, I_C = 0		0.1	µA
On Characteristics *					
h_{FE}	DC Current Gain	I_C = 1.0mA, V_{CE} = 10V I_C = 10mA, V_{CE} = 10V I_C = 30mA, V_{CE} = 10V	25 40 50	 200	
V_{CE}(sat)	Collector-Emitter Saturation Voltage	I_C = 20mA, I_B = 2.0mA		0.4	V
V_{BE}(sat)	Base-Emitter Saturation Voltage	I_C = 20mA, I_B = 2.0mA		0.9	V
Small Signal Characteristics *					
f_T	Current Gain Dandwidth Product	I_C = 10mA, V_{CE} = 20V, f = 100MHz	50		MHz
C_{cb}	Collector-Base Capacitance	V_{CB} = 20V, I_E = 0, f = 1.0MHz		4.0	pF

* Pulse Test: Pulse Width ≤ 300µs, Duty Cycle ≤ 2.0%

Thermal Characteristics T_A=25°C unless otherwise noted

Symbol	Parameter	Max.	Units
P_D	Total Device Dissipation Derate above 25°C	625 5.0	mW mW/°C
$R_{\theta JC}$	Thermal Resistance, Junction to Case	83.3	°C/W
$R_{\theta JA}$	Thermal Resistance, Junction to Ambient	200	°C/W

©2002 Fairchild Semiconductor Corporation

Package Dimensions

TO-92

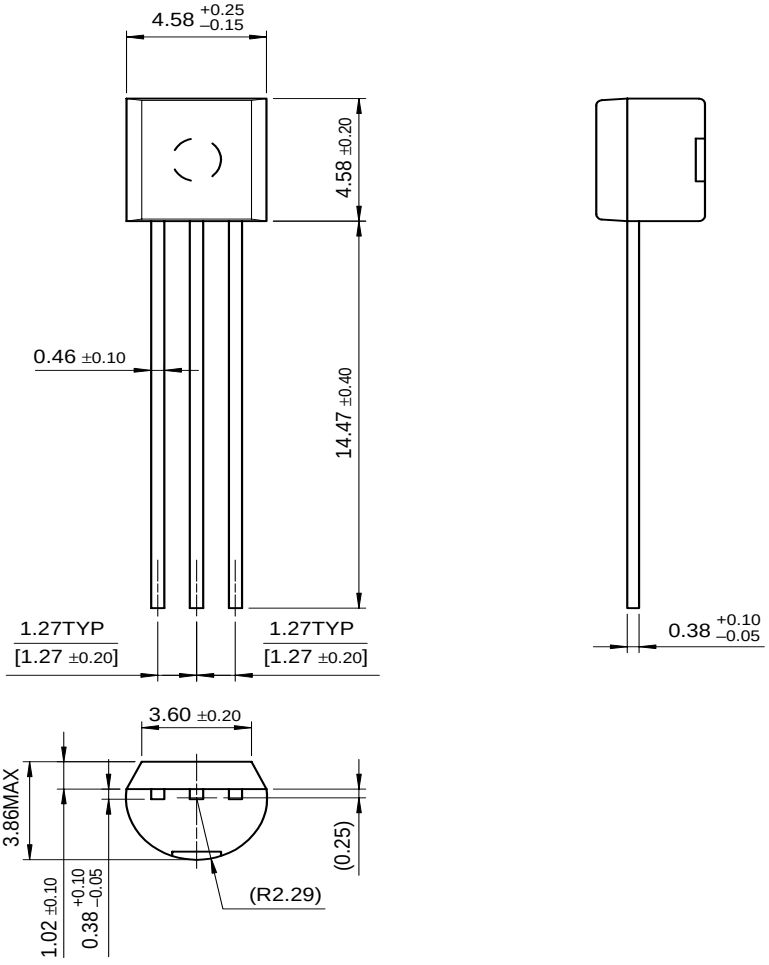

Dimensions in Millimeters

©2002 Fairchild Semiconductor Corporation

TRADEMARKS

The following are registered and unregistered trademarks Fairchild Semiconductor owns or is authorized to use and is not intended to be an exhaustive list of all such trademarks.

ACEx™	FACT™	ImpliedDisconnect™	PACMAN™	SPM™
ActiveArray™	FACT Quiet series™	ISOPLANAR™	POP™	Stealth™
Bottomless™	FAST®	LittleFET™	Power247™	SuperSOT™-3
CoolFET™	FASTr™	MicroFET™	PowerTrench®	SuperSOT™-6
CROSSVOLT™	FRFET™	MicroPak™	QFET™	SuperSOT™-8
DOME™	GlobalOptoisolator™	MICROWIRE™	QS™	SyncFET™
EcoSPARK™	GTO™	MSX™	QT Optoelectronics™	TinyLogic™
E^2CMOS™	HiSeC™	MSXPro™	Quiet Series™	TruTranslation™
EnSigna™	I^2C™	OCX™	RapidConfigure™	UHC™
Across the board. Around the world.™		OCXPro™	RapidConnect™	UltraFET®
The Power Franchise™		OPTOLOGIC®	SILENT SWITCHER®	VCX™
Programmable Active Droop™		OPTOPLANAR™	SMART START™	

DISCLAIMER

FAIRCHILD SEMICONDUCTOR RESERVES THE RIGHT TO MAKE CHANGES WITHOUT FURTHER NOTICE TO ANY PRODUCTS HEREIN TO IMPROVE RELIABILITY, FUNCTION OR DESIGN. FAIRCHILD DOES NOT ASSUME ANY LIABILITY ARISING OUT OF THE APPLICATION OR USE OF ANY PRODUCT OR CIRCUIT DESCRIBED HEREIN; NEITHER DOES IT CONVEY ANY LICENSE UNDER ITS PATENT RIGHTS, NOR THE RIGHTS OF OTHERS.

LIFE SUPPORT POLICY

FAIRCHILD'S PRODUCTS ARE NOT AUTHORIZED FOR USE AS CRITICAL COMPONENTS IN LIFE SUPPORT DEVICES OR SYSTEMS WITHOUT THE EXPRESS WRITTEN APPROVAL OF FAIRCHILD SEMICONDUCTOR CORPORATION.

As used herein:

1. Life support devices or systems are devices or systems which, (a) are intended for surgical implant into the body, or (b) support or sustain life, or (c) whose failure to perform when properly used in accordance with instructions for use provided in the labeling, can be reasonably expected to result in significant injury to the user.

2. A critical component is any component of a life support device or system whose failure to perform can be reasonably expected to cause the failure of the life support device or system, or to affect its safety or effectiveness.

PRODUCT STATUS DEFINITIONS

Definition of Terms

Datasheet Identification	Product Status	Definition
Advance Information	Formative or In Design	This datasheet contains the design specifications for product development. Specifications may change in any manner without notice.
Preliminary	First Production	This datasheet contains preliminary data, and supplementary data will be published at a later date. Fairchild Semiconductor reserves the right to make changes at any time without notice in order to improve design.
No Identification Needed	Full Production	This datasheet contains final specifications. Fairchild Semiconductor reserves the right to make changes at any time without notice in order to improve design.
Obsolete	Not In Production	This datasheet contains specifications on a product that has been discontinued by Fairchild semiconductor. The datasheet is printed for reference information only.

©2002 Fairchild Semiconductor Corporation

Looking for pricing, stock, or lifecycle information?

Click below to explore more details on WIN SOURCE:

- View MPSA43 on WIN SOURCE
- ON Semiconductor Information

Optimize Your Supply Chain with WIN SOURCE Solutions

- Global Sourcing Solution
- Obsolete Management
- Cost Control Management
- Shortage Management
- Alternative Solution
- Excess Inventory Management