THE DATASHEET OF

ECC-T3F270JG2

High Voltage Ceramic Capacitors For Surface Mounting 1 to 5 kVDC

Discontinued




■ Features

- Resin molded SMD type for reflow solderings
- High reliability through use of disc capacitor element
- Wide rated voltage ranges from 1 kV to 5 kV, through a disc element which withstand high voltage and outcurve terminals
- Wide rated voltage range 1 to 5 kV

■ Recommended Application

- Ballast circuit of LCD backlighting inverter (For 3 to 5 kVDC Char.SL/GP)
- Snubber circuit of switching power supply (For 1 to 2 kVDC Char.B/Y5P)

■ Explanation of Part Numbers

1	2	3	4	5	6	7	8	9	10	11	12
E	C	C	T	3	F	4	7	0	J	G	

Product Code	
Code	Class
ECC	Class1
ECK	Class2

Packaging Style	
Code	Style
T	Taped type

Rated Voltage	
Code	Rated Voltage
3A	1 kVDC
3D	2 kVDC
3F	3 kVDC
3G	4 kVDC
3H	5 kVDC

Nominal Capacitance	
Ex.	Capacitance
100	10 pF
470	47 pF
101	100 pF
221	220 pF

Cap. Tolerance	
Code	Tol.
D	±0.5 pF
J	±5 %
K	±10 %
M	±20 %

Temp. Char.	
Code	Temp. Char.
G	SL/GP
B	B/Y5P

Suffix	
Code	Style code
Nil	1
M	2
2	3
Y	4

■ Construction

● Inside Terminal

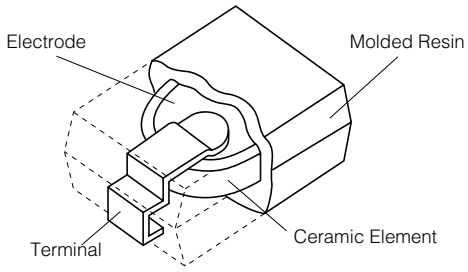

● Outside Terminal

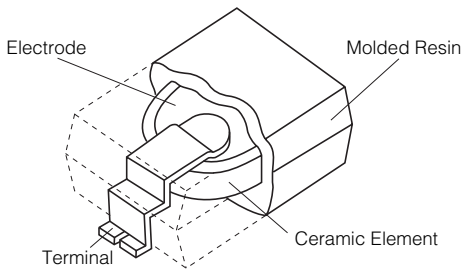

■ Dimensions in mm (not to scale)

● style 1, 3

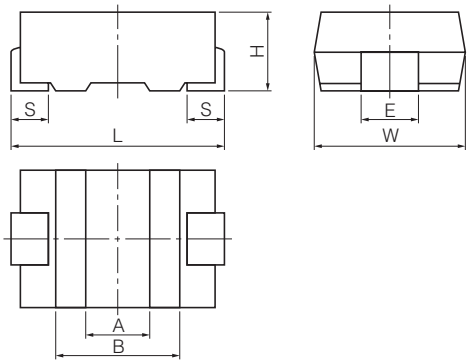

● style 2, 4

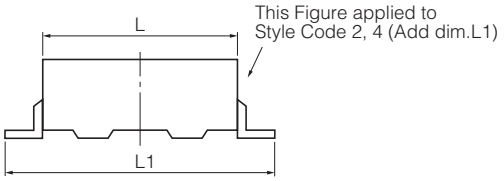

Symbol		L1	L	W	H	S	E	A	B
Dim (mm)	Style 1	—	7.1±0.5	6.3±0.3	2.5±0.3	1.45±0.30	2.5±0.2	(2.0)	(3.7)
	Style 2	10.8±0.5	6.8±0.5	6.3±0.3	2.5±0.3	—	2.5±0.2	(2.0)	(3.7)
	Style 3	—	5.7±0.5	4.5±0.3	2.3max.	0.85±0.30	2.5±0.2	(1.7)	(3.1)
	Style 4	9.4±0.3	5.5±0.5	4.5±0.3	2.3±0.2	—	2.5±0.2	(1.7)	(3.1)

Design and specifications are each subject to change without notice. Ask factory for the current technical specifications before purchase and/or use.
Should a safety concern arise regarding this product, please be sure to contact us immediately.

■ Specifications

Characteristics	Char. SL/GP			Char. B/Y5P
Operating Temperature Range	–25 to 105 °C			
Rated Voltage	2 to 3 kVDC	4 to 5 kVDC	5 kVDC	1 to 2 kVDC
Dielectric Withstanding Voltage	200 % of Rated Voltage for 1 to 5 seconds	150 % of Rated Voltage for 1 to 5 seconds	120 % of Rated Voltage for 1 to 5 seconds	200 % of Rated Voltage for 1 to 5 seconds
Capacitance	Within the specified tolerance, when measured at 1 MHz±20 %, 1 to 5 Vrms. and 20 °C			Within the specified tolerance, when measured at 1 kHz±20 %, 1 to 5 Vrms. and 20 °C
Q or Dissipation Factor (tan δ)	30 pF or under Q ≧ 400+20 C (C:Cap.pF) over 30 pF Q ≧ 1000 at 1 MHz±20 %,1 to 5 Vrms. and 20 °C			tan δ ≦ 0.025 at 1 kHz±20 %,1 to 5 Vrms. and 20 °C
Insulation Resistance	10000 M Ω min. at 500 VDC and 1 minute electrification			
Temperature Characteristics	Temperature Coefficient: +350 to –1000 ppm/ °C (Temperature Range : 20 to 85 °C)			Max. Cap. Change:±10 % (Temperature Range : –25 to 85 °C)

■ Packaging Methods (Taping)

● Minimum Quantity/Packing Unit

Type	Packaging Style	Part Number		Minimum Packing Quantity	Packing Quantity in Carton	Carton Dimensions in mm L×W×H
1 to 5 kVDC (style 1)	Embossed Carrier Taping	EC□T3□□□□□□	5 to 470 pF	2000 pcs./reel	6000 pcs.	350×350×62
5 kVDC (style 2)	Embossed Carrier Taping	ECCT3H□□□□□M	5 to 27 pF	2000 pcs./reel	4000 pcs.	350×350×62
4 kVDC (style 3)	Embossed Carrier Taping	ECCT3G□□□JG2	10 to 27 pF	3000 pcs./reel	9000 pcs.	350×350×62
5 kVDC (style 4)	Embossed Carrier Taping	ECCT3H□□□□□Y	5 to 15 pF	3000 pcs./reel	6000 pcs.	350×350×62

● Reel

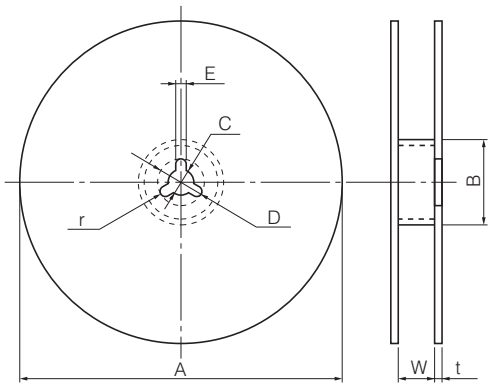

Unit:(mm)

Symbol		A	B	C	D	E	W	t	r
Dim. (mm)	style 1, 3	330±5	60 min.	13.0±0.5	21.0±1.0	2.0±0.5	13.5±1.5	2.0±0.5	R1.0
	style 2						25.5±1.5		
	style 4						17.5±1.5		

● Embossed Carrier Taping

style 1, 3, 4

(W=12 mm)

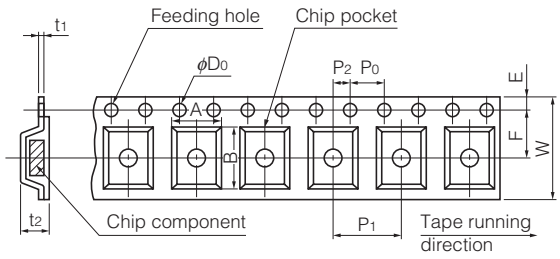

style 2

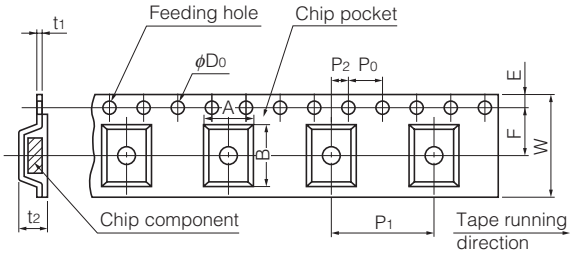

Unit:(mm)

Symbol		A	B	W	F	E	P1	P2	P0	φD0	t1	t2
Dim. (mm)	style1	6.5 ±0.2	7.5 ±0.2	12.0 ±0.3	5.5 ±0.1	1.75 ±0.10	8.0 ±0.1	2.0 ±0.1	4.0 ±0.1	1.5 +0.1 −0	0.3 ±0.1	3.2 ±0.3
	style2	6.65 ±0.20	11.2 ±0.2	24.0 ±0.3	11.5 ±0.1	1.75 ±0.10	12.0 ±0.1	2.0 ±0.1	4.0 ±0.1	1.5 +0.1 −0	0.3 ±0.1	3.2 ±0.3
	style3	4.8 ±0.2	6.0 ±0.2	12.0 ±0.3	5.5 ±0.1	1.75 ±0.10	8.0 ±0.1	2.0 ±0.1	4.0 ±0.1	1.5 +0.1 −0	0.3 ±0.1	2.8 ±0.3
	style4	4.7 ±0.2	10.0 ±0.5	16.0 ±0.3	7.5 ±0.1	1.75 ±0.10	8.0 ±0.1	2.0 ±0.1	4.0 ±0.1	1.5 +0.1 −0	0.3 ±0.1	2.85 ±0.30

Design and specifications are each subject to change without notice. Ask factory for the current technical specifications before purchase and/or use.
Should a safety concern arise regarding this product, please be sure to contact us immediately.

● Leader Part and Taped End

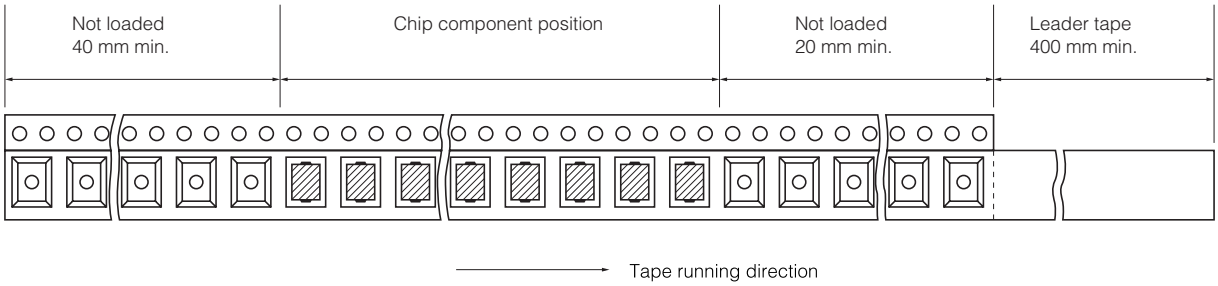

■ Ratings and Characteristics

● Rated Voltage 1 to 5 kVDC

Rated Voltage	Part Number	Capacitance (pF)	Cap. Tolerance (%)	Temp. Char	Style
5 kVDC	ECCT3H050DGM	5	±0.5 pF	SL/GP	Style 2
	ECCT3H100JGM	10	±5	SL/GP	
	ECCT3H120JGM	12	±5	SL/GP	
	ECCT3H150JGM	15	±5	SL/GP	
	ECCT3H180JGM	18	±5	SL/GP	
	ECCT3H220JGM	22	±5	SL/GP	
	ECCT3H270JGM	27	±5	SL/GP	
	ECCT3H050DGY	5	±0.5 pF	SL/GP	Style 4
	ECCT3H080DGY	8	±0.5 pF	SL/GP	
	ECCT3H100JGY	10	±5	SL/GP	
	ECCT3H120JGY	12	±5	SL/GP	
	ECCT3H150JGY	15	±5	SL/GP	
4 kVDC	ECCT3G100DG2	10	±0.5 pF	SL/GP	Style 3
	ECCT3G120JG2	12	±5	SL/GP	
	ECCT3G150JG2	15	±5	SL/GP	
	ECCT3G180JG2	18	±5	SL/GP	
	ECCT3G220JG2	22	±5	SL/GP	
	ECCT3G270JG2	27	±5	SL/GP	
	ECCT3G330JG	33	±5	SL/GP	Style 1
	ECCT3G390JG	39	±5	SL/GP	
	ECCT3G470JG	47	±5	SL/GP	
3 kVDC	ECCT3F100DG2	10	±0.5 pF	SL/GP	Style 3
	ECCT3F120JG2	12	±5	SL/GP	
	ECCT3F150JG2	15	±5	SL/GP	
	ECCT3F180JG2	18	±5	SL/GP	
	ECCT3F220JG2	22	±5	SL/GP	
	ECCT3F270JG2	27	±5	SL/GP	
	ECCT3F330JG2	33	±5	SL/GP	
	ECCT3F390JG	39	±5	SL/GP	Style 1
	ECCT3F470JG	47	±5	SL/GP	
	ECCT3F560JG	56	±5	SL/GP	
2 kVDC	ECCT3D680JG	68	±5	SL/GP	
	ECKT3D101KB	100	±10	B/Y5P	
	ECKT3D121KB	120	±10	B/Y5P	
	ECKT3D151KB	150	±10	B/Y5P	
	ECKT3D181KB	180	±10	B/Y5P	
	ECKT3D221KB	220	±10	B/Y5P	
	ECKT3D271KB	270	±10	B/Y5P	
	ECKT3D331KB	330	±10	B/Y5P	
1 kVDC	ECKT3A391KB	390	±10	B/Y5P	
	ECKT3A471KB	470	±10	B/Y5P	

Notes ✻ This part number indicates taped type.
✻ Capacitance 9 pF or under is available by special order.

Design and specifications are each subject to change without notice. Ask factory for the current technical specifications before purchase and/or use.
Should a safety concern arise regarding this product, please be sure to contact us immediately.

■ Typical Characteristics

● Temperature Characteristics

Char. SL/GP
(Temp.Coeff.:+350 to −1000 ppm/°C)

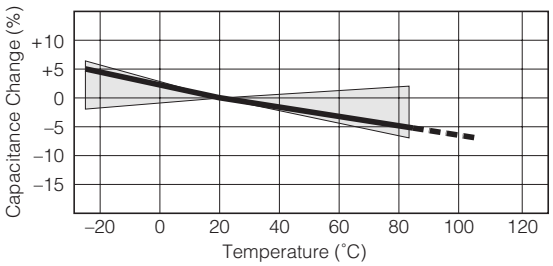

Char. B/Y5P
(Temp.Range:−25 to 85 °C
max.Cap.Change:±10 %)

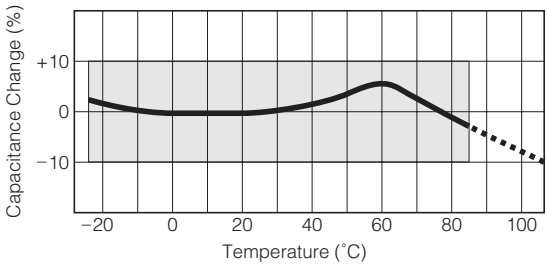

● Characteristics of Voltage-Frequency

Rated Voltage 3 kVDC

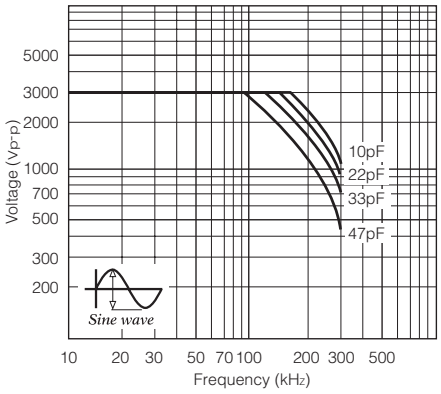

Rated Voltage 4 kVDC

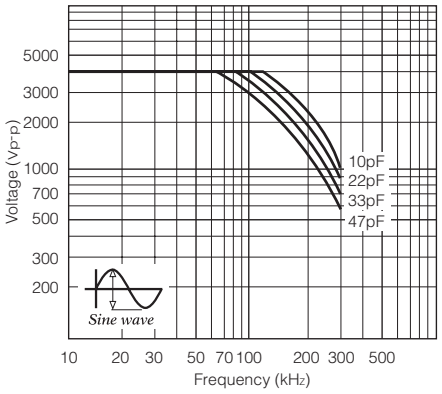

Rated Voltage 5 kVDC

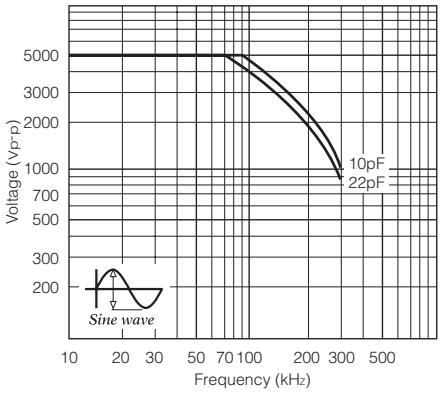

The graphs above show the maximum permissable voltage when using a capacitor with an AC sine wave voltage.
When measuring this voltage in room temperature (25 °C), the capacitor self-heat generation will rise a maximum of 20 °C.
When using a pulse voltage or an AC voltage other than a sine wave, confirm that the capacitor self-heat generation is less than 20 °C in an ambient room temperature of 25 °C.
The self-heat generation temperature is the difference between the surface temperature and the ambient room temperature.
As for the situation when the self-heat generation temperature is more than 25 °C, refer to the figure on the right.

Permission self generation of heat temperature vs. ambient temperature

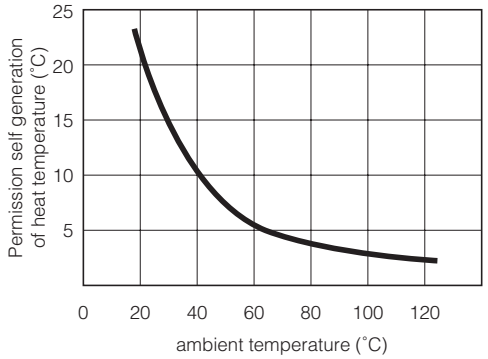

■ Application Examples

● LCD Backlighting Inverter

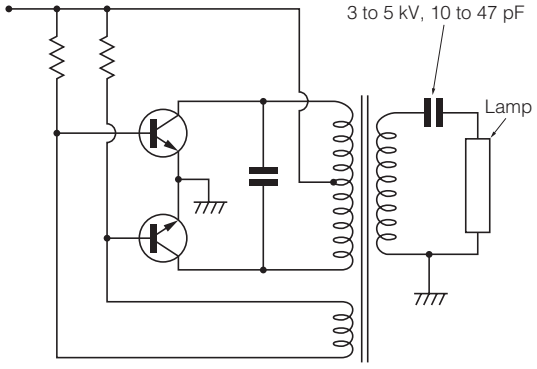

● Primary circuit and Snubber circuit of Switching Power Supply

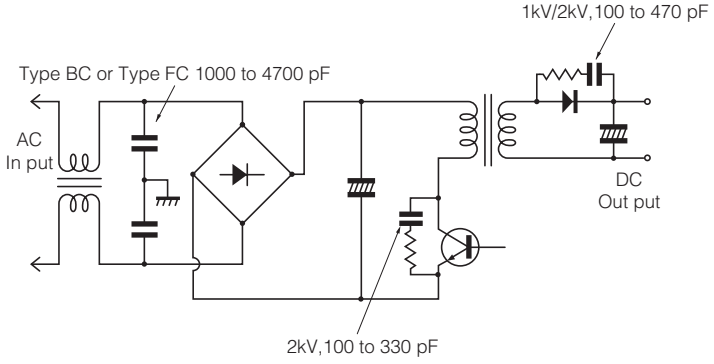

Design and specifications are each subject to change without notice. Ask factory for the current technical specifications before purchase and/or use.
Should a safety concern arise regarding this product, please be sure to contact us immediately.

Looking for pricing, stock, or lifecycle information?

Click below to explore more details on WIN SOURCE:

- View ECC-T3F270JG2 on WIN SOURCE
- Panasonic Information

Optimize Your Supply Chain with WIN SOURCE Solutions

- Global Sourcing Solution
- Obsolete Management
- Cost Control Management
- Shortage Management
- Alternative Solution
- Excess Inventory Management