THE DATASHEET OF

BU931P

www.win-source.net 0086-755-83957316

BU931T

Automotive-grade high voltage ignition coil driver NPN power Darlington transistor

Datasheet - production data

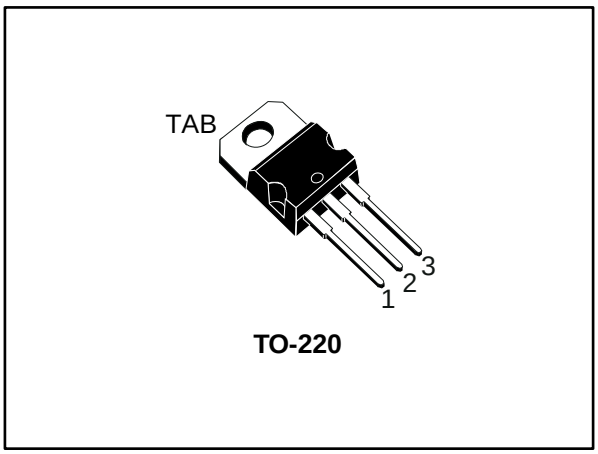

TO-220

Figure 1: Internal schematic diagram

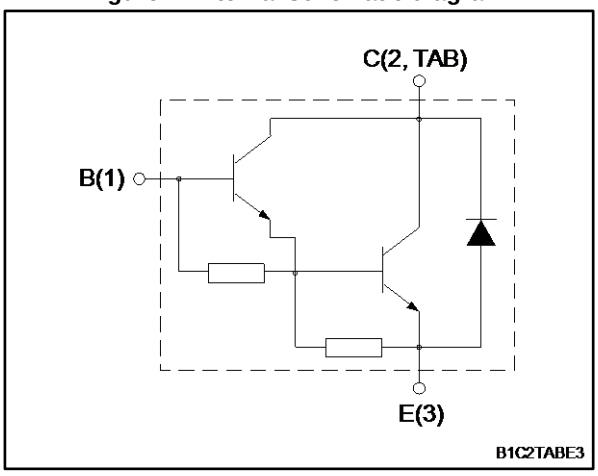

Features

- AEC-Q101 qualified
- Very rugged Bipolar technology
- High operating junction temperature

Applications

- High ruggedness electronic ignitions

Description

This is a high voltage power Darlington transistor developed using multi-epitaxial planar technology. It has been properly designed for automotive environment as electronic ignition power actuators.

Table 1: Device summary

Order code	Marking	Package	Packing
BU931T	BU931T	TO-220	Tube

This is information on a product in full production.

www.st.com

Contents

1 Electrical ratings 3
2 Electrical characteristics 4
2.1 Electrical characteristics (curves) 5
3 Test circuits 7
4 Package information 8
4.1 TO-220 type A package information 9
5 Revision history 11

1 Electrical ratings

Table 2: Absolute maximum ratings

Symbol	Parameter	Value	Unit
V_{CES}	Collector-emitter voltage (V_{BE} = 0)	500	V
V_{CEO}	Collector-emitter voltage (I_B = 0)	400	V
V_{EBO}	Emitter-base voltage (I_C = 0)	5	V
I_C	Collector current	10	A
I_{CM}	Collector peak current	20	A
I_B	Base current	1	A
I_{BM}	Base peak current	5	A
P_{TOT}	Total dissipation at Tc = 25 °C	125	W
T_{stg}	Storage temperature range	-65 to 175	°C
T_j	Operating junction temperature range		°C

Table 3: Thermal data

Symbol	Parameter	Value	Unit
R_{thJC}	Thermal resistance junction-case	1.2	°C/W
R_{thJA}	Thermal resistance junction-ambient	62.5	°C/W

2 Electrical characteristics

(T_C = 25 °C unless otherwise specified)

Table 4: Electrical characteristics

Symbol	Parameter	Test conditions	Min.	Typ.	Max.	Unit
I_{CES}	Collector cut-off current	V_{BE} = 0 V, V_{CE} = 500 V		-	100	µA
		V_{BE} = 0 V, V_{CE} = 500 V, T_C = 125 °C (1)		-	0.5	mA
I_{CEO}	Collector cut-off current	I_B = 0 A, V_{CE} = 450 V		-	100	µA
		I_B = 0 A, V_{CE} = 450 V, T_C = 125 °C (1)		-	0.5	mA
I_{EBO}	Emitter cut-off current	I_C= 0 A, V_{EB} = 5 V		-	20	mA
$V_{CEO(sus)}$(2)	Collector-emitter sustaining voltage	I_B= 0 A, I_C = 100 mA	400	-		V
$V_{CE(sat)}$(2)	Collector-emitter saturation voltage	I_C = 7 A, I_B = 70 mA		-	1.6	V
		I_C = 8 A, I_B = 100 mA		-	1.8	V
		I_C = 10 A, I_B = 250 mA		-	1.8	V
$V_{BE(sat)}$(2)	Base-emitter saturation voltage	I_C = 7 A, I_B = 70 mA		-	2.2	V
		I_C = 8 A, I_B = 100 mA		-	2.4	V
		I_C = 10 A, I_B = 250 mA		-	2.5	V
h_{FE}(2)	DC current gain	I_C = 5 A, V_{CE} = 10 V	300	-		
V_F	Diode forward voltage	I_F = 10 A		-	2.5	V
	Functional test	V_{CC} = 24 V,L = 7 mH, V_{clamp} = 400 V (see *Figure 10: "Functional test circuit"*)	8	-		A

Notes:

(1)Defined by design, not subject to production test.

(2)Pulse test: pulse duration ≤ 300 µs, duty cycle ≤ 2 %.

Table 5: Inductive load switching times

Symbol	Parameter	Test conditions	Min.	Typ.	Max.	Unit
t_s	Storage time	V_{CC} = 12 V, V_{clamp} = 300 V, L = 7 mH, R_{BE} = 47 Ω, I_C = 7 A, I_B = 70 mA	-	15	-	µs
t_f	Fall time		-	0.5	-	µs

2.1 Electrical characteristics (curves)

Figure 2: Safe operating area

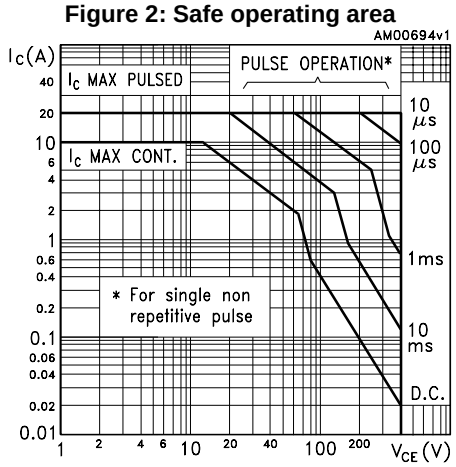

Figure 3: DC current gain

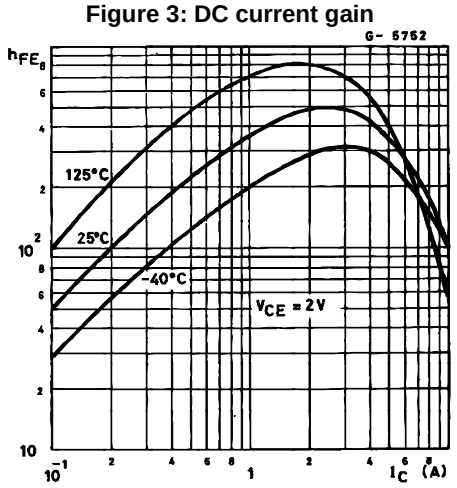

Figure 4: Switching time inductive load

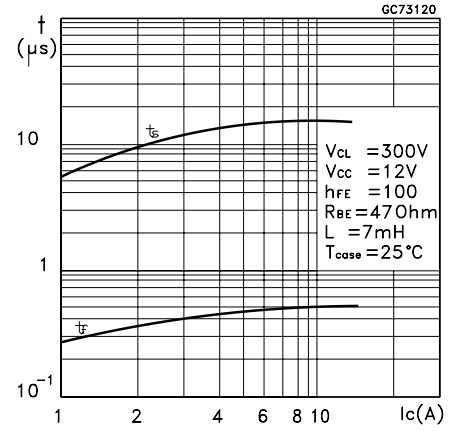

Figure 5: Collector-emitter saturation voltage @ h_{FE} = 50

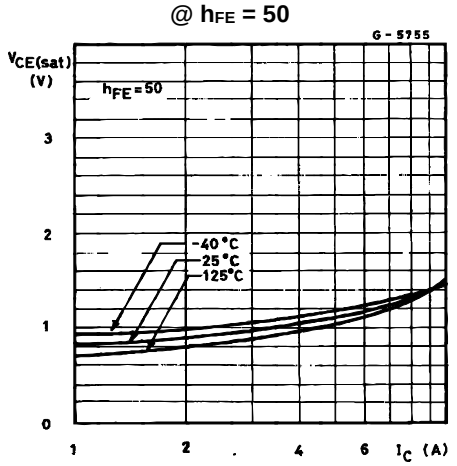

Figure 6: Collector-emitter saturation voltage @ h_{FE} = 100

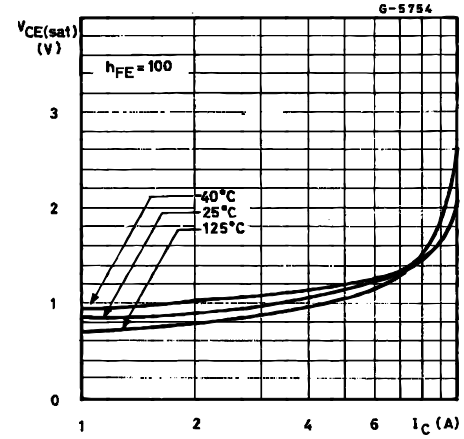

Figure 7: Collector-emitter saturation voltage

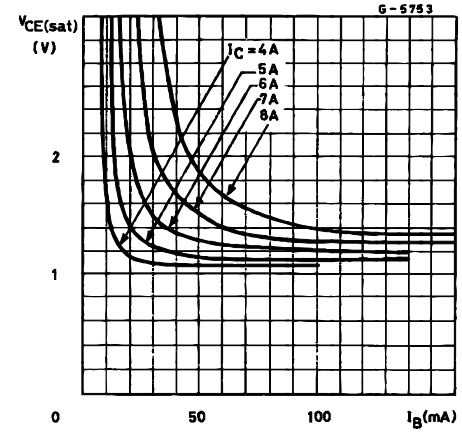

Figure 8: Base-emitter saturation voltage @ h_{FE} = 50

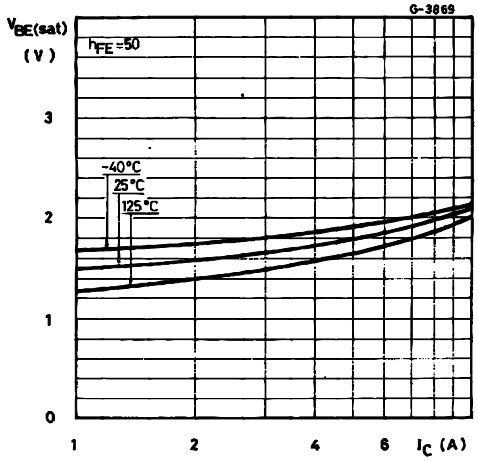

Figure 9: Base-emitter saturation voltage @ h_{FE} = 100

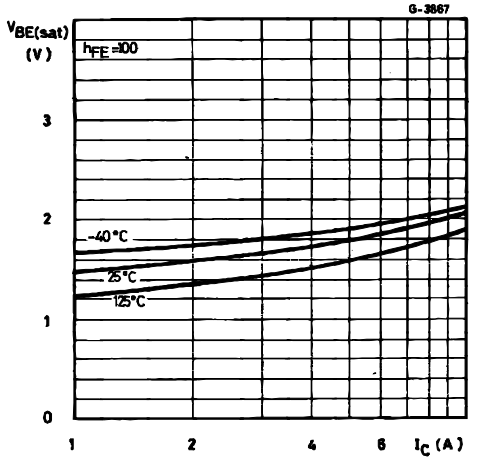

3 Test circuits

Figure 10: Functional test circuit

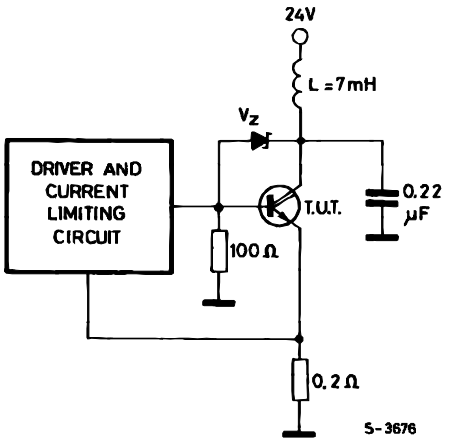

Figure 11: Functional test waveforms

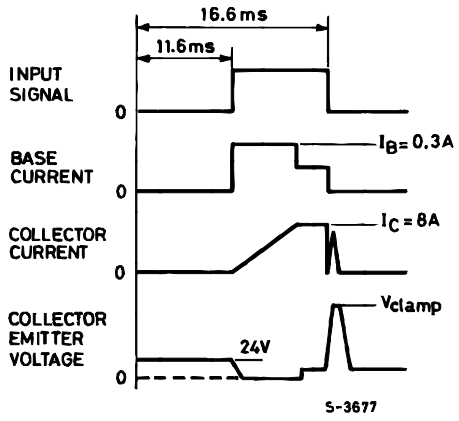

Figure 12: Switching time test circuit

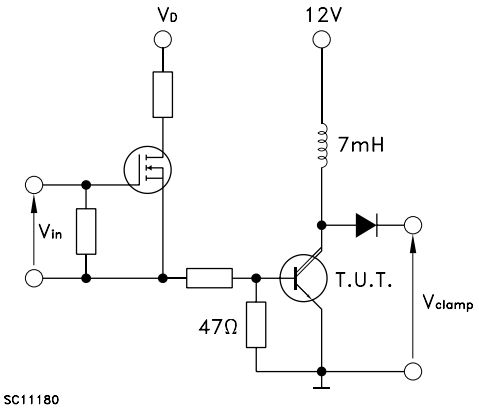

Figure 13: Sustaining voltage test circuit

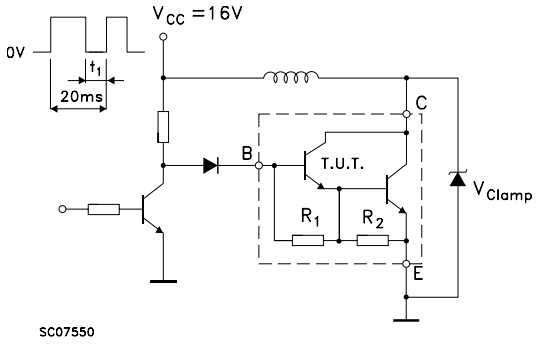

4 Package information

In order to meet environmental requirements, ST offers these devices in different grades of ECOPACK® packages, depending on their level of environmental compliance. ECOPACK® specifications, grade definitions and product status are available at: ***www.st.com***. ECOPACK® is an ST trademark.

4.1 TO-220 type A package information

Figure 14: TO-220 type A package outline

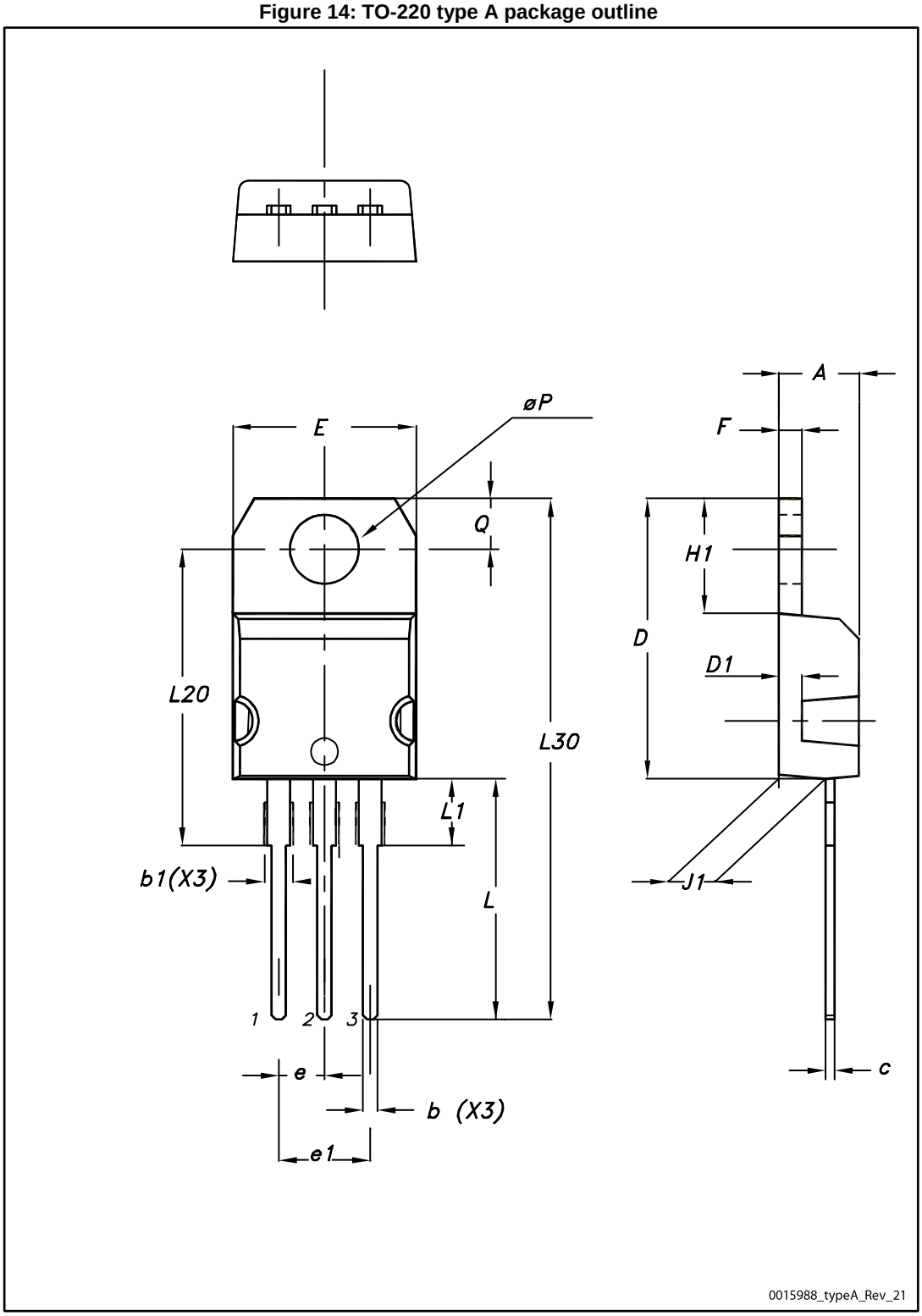

Table 6: TO-220 type A package mechanical data

Dim.	mm		
	Min.	Typ.	Max.
A	4.40		4.60
b	0.61		0.88
b1	1.14		1.55
c	0.48		0.70
D	15.25		15.75
D1		1.27	
E	10.00		10.40
e	2.40		2.70
e1	4.95		5.15
F	1.23		1.32
H1	6.20		6.60
J1	2.40		2.72
L	13.00		14.00
L1	3.50		3.93
L20		16.40	
L30		28.90	
øP	3.75		3.85
Q	2.65		2.95

5 Revision history

Table 7: Document revision history

Date	Revision	Changes
18-Nov-2008	3	Package changed from TO-218 to TO-247 for BU931P. Inserted type in TO-220 (BU931T).
02-Dec-2009	4	Modified I_C test condition value of $V_{CEO(sus)}$ parameter *Table 4 on page 4*, updated TO-220 package mechanical data.
12-Oct-2017	5	The part numbers BU931 and BU931P have been moved to two separate datasheets. Modified *Table 2: "Absolute maximum ratings"*, *Table 3: "Thermal data"* and *Table 4: "Electrical characteristics"*. Updated *Section 4: "Package information"*. Minor text changes.

IMPORTANT NOTICE – PLEASE READ CAREFULLY

STMicroelectronics NV and its subsidiaries (“ST”) reserve the right to make changes, corrections, enhancements, modifications, and improvements to ST products and/or to this document at any time without notice. Purchasers should obtain the latest relevant information on ST products before placing orders. ST products are sold pursuant to ST’s terms and conditions of sale in place at the time of order acknowledgement.

Purchasers are solely responsible for the choice, selection, and use of ST products and ST assumes no liability for application assistance or the design of Purchasers’ products.

No license, express or implied, to any intellectual property right is granted by ST herein.

Resale of ST products with provisions different from the information set forth herein shall void any warranty granted by ST for such product.

ST and the ST logo are trademarks of ST. All other product or service names are the property of their respective owners.

Information in this document supersedes and replaces information previously supplied in any prior versions of this document.

© 2017 STMicroelectronics – All rights reserved

Looking for pricing, stock, or lifecycle information?

Click below to explore more details on WIN SOURCE:

- View BU931P on WIN SOURCE
- STMicroelectronics Information

Optimize Your Supply Chain with WIN SOURCE Solutions

- Global Sourcing Solution
- Obsolete Management
- Cost Control Management
- Shortage Management
- Alternative Solution
- Excess Inventory Management