THE DATASHEET OF

L7905CV

www.win-source.net 0086-755-83957316

L79xxC

Negative voltage regulators

Datasheet – production data

Features

- Output current up to 1.5 A
- Output voltages of - 5; - 8; - 12; - 15 V
- Thermal overload protection
- Short circuit protection
- Output transition SOA protection

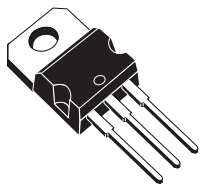

TO-220

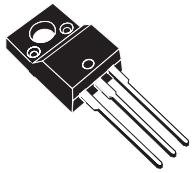

TO-220FP

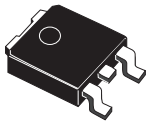

D²PAK

Description

The L79xxC series of three-terminal negative regulators is available in TO-220, TO-220FP and D²PAK packages and several fixed output voltages, making it useful in a wide range of applications. These regulators can provide local on-card regulation, eliminating the distribution problems associated with single point regulation; furthermore, having the same voltage option as the L78xx positive standard series, they are particularly suited for split power supplies. If adequate heat sinking is provided, they can deliver over 1.5 A output current. Although designed primarily as fixed voltage regulators, these devices can be used with external components to obtain adjustable voltages and currents.

Table 1. Device summary

Part numbers	Order codes				Output voltages
	TO-220		D²PAK	TO-220FP	
L7905C	L7905CV	L7905CV-DG (1)	L7905CD2T-TR	L7905CP	- 5 V
L7908C	L7908CV	L7908CV-DG (1)			- 8 V
L7912C	L7912CV	L7912CV-DG (1)	L7912CD2T-TR	L7912CP	- 12 V
L7915C	L7915CV	L7915CV-DG (1)	L7915CD2T-TR	L7915CP	- 15 V

1. TO-220 Dual Gauge frame.

This is information on a product in full production. www.st.com

Contents

1 Diagram 3

2 Pin configuration 4

3 Maximum ratings 5

4 Test circuit 6

5 Electrical characteristics 7

6 Application information 11

7 Package mechanical data 13

8 Revision history 23

1 Diagram

Figure 1. Schematic diagram

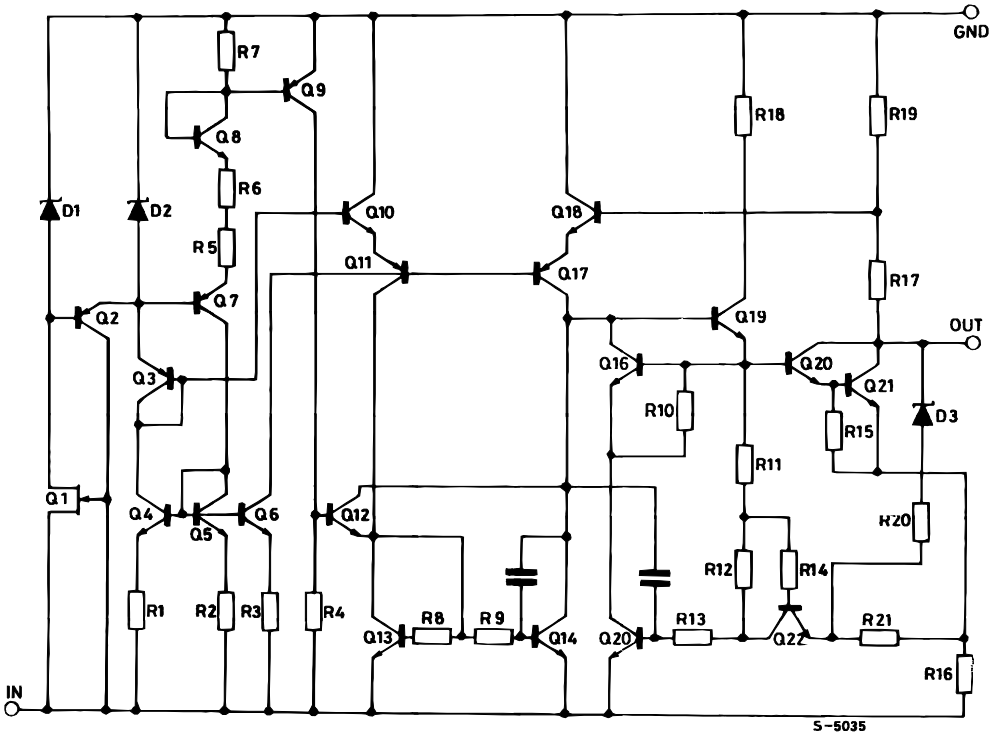

2 Pin configuration

Figure 2. Pin connections (top view)

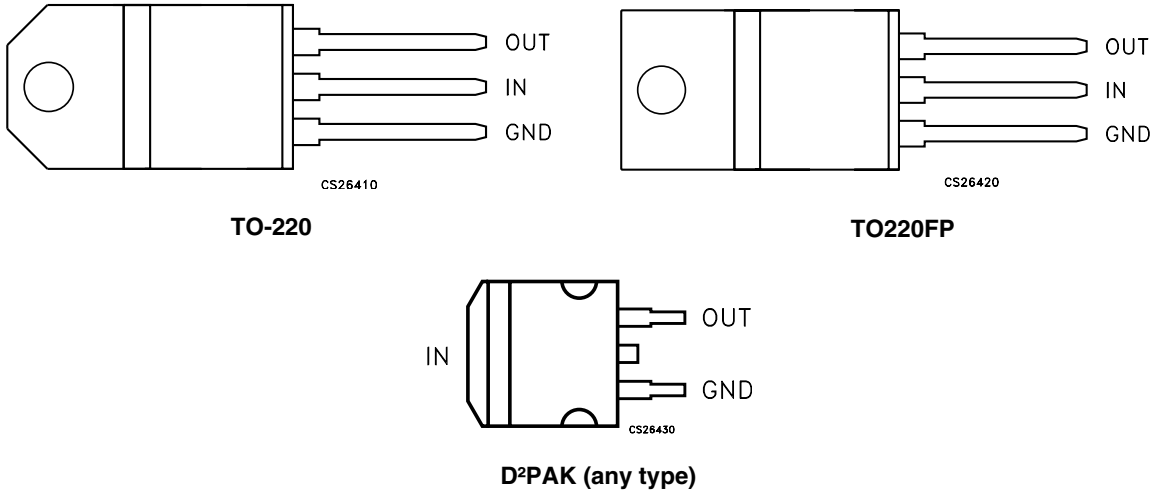

3 Maximum ratings

Table 2. Absolute maximum ratings

Symbol	Parameter		Value	Unit
V_I	DC input voltage	for V_O = - 5 to - 18 V	-35	V
		for V_O = - 20 to - 24 V	-40	
I_O	Output current		Internally limited	
P_D	Power dissipation		Internally limited	
T_{STG}	Storage temperature range		-65 to 150	°C
T_{OP}	Operating junction temperature range		0 to 150	°C

Note: Absolute maximum ratings are those values beyond which damage to the device may occur. Functional operation under these condition is not implied.

Table 3. Thermal data

Symbol	Parameter	D²PAK	TO-220	TO-220FP	Unit
R_{thJC}	Thermal resistance junction-case	3	5	5	°C/W
R_{thJA}	Thermal resistance junction-ambient	62.5	50	60	°C/W

4 Test circuit

Figure 3. Test circuit

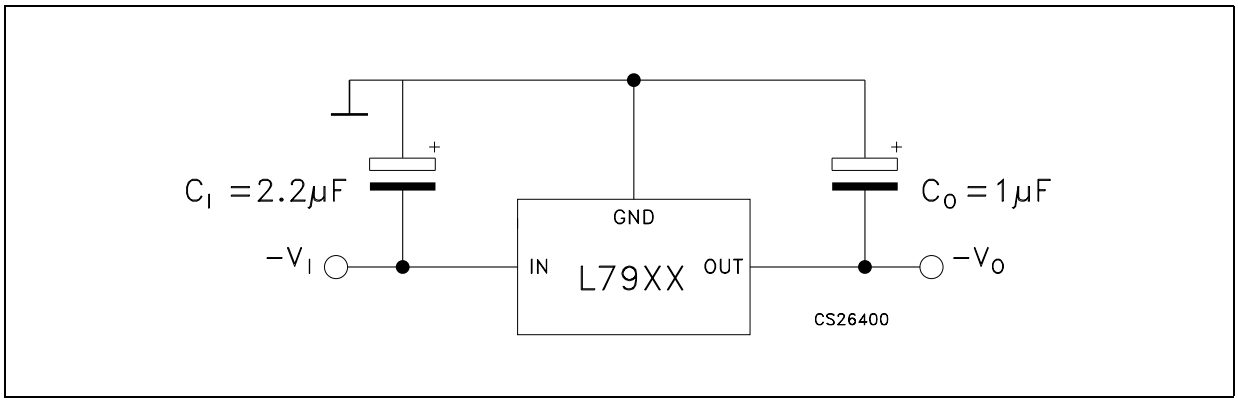

5 Electrical characteristics

Refer to the test circuits, T_J = 0 to 125 °C, V_I = -10 V, I_O = 500 mA, C_I = 2.2 µF, C_O = 1 µF unless otherwise specified.

Table 4. Electrical characteristics of L7905C

Symbol	Parameter	Test conditions	Min.	Typ.	Max.	Unit
V_O	Output voltage	T_J = 25°C	-4.8	-5	-5.2	V
V_O	Output voltage	I_O = -5 mA to -1 A, $P_O \leq$ 15 W V_I = -8 to -20 V	-4.75	-5	-5.25	V
ΔV_O(1)	Line regulation	V_I = -7 to -25 V, T_J = 25°C			100	mV
		V_I = -8 to -12 V, T_J = 25°C			50	
ΔV_O(1)	Load regulation	I_O = 5 mA to 1.5 A, T_J = 25°C			100	mV
		I_O = 250 to 750 mA, T_J = 25°C			50	
I_d	Quiescent current	T_J = 25°C			3	mA
ΔI_d	Quiescent current change	I_O = 5 mA to 1 A			0.5	mA
		V_I = -8 to -25 V			1.3	
$\Delta V_O/\Delta T$	Output voltage drift	I_O = 5 mA		-0.4		mV/°C
eN	Output noise voltage	B = 10Hz to 100kHz, T_J = 25°C		100		µV
SVR	Supply voltage rejection	ΔV_I = 10 V, f = 120Hz	54	60		dB
V_d	Dropout voltage	I_O = 1 A, T_J = 25°C, ΔV_O = 100 mV		1.4		V
I_{sc}	Short circuit current			2.1		A

1. Load and line regulation are specified at constant junction temperature. Changes in V_O due to heating effects must be taken into account separately. Pulse testing with low duty cycle is used.

Refer to the test circuits, T_J = 0 to 125 °C, V_I = -14 V, I_O = 500 mA, C_I = 2.2 µF, C_O = 1 µF unless otherwise specified.

Table 5. Electrical characteristics of L7908C

Symbol	Parameter	Test conditions	Min.	Typ.	Max.	Unit
V_O	Output voltage	T_J = 25°C	-7.7	-8	-8.3	V
V_O	Output voltage	I_O = -5 mA to -1 A, $P_O \leq$ 15 W V_I = -11.5 to -23 V	-7.6	-8	-8.4	V
ΔV_O(1)	Line regulation	V_I = -10.5 to -25 V, T_J = 25°C			160	mV
		V_I = -11 to -17 V, T_J = 25°C			80	
ΔV_O(1)	Load regulation	I_O = 5 mA to 1.5 A, T_J = 25°C			160	mV
		I_O = 250 to 750 mA, T_J = 25°C			80	
I_d	Quiescent current	T_J = 25°C			3	mA
ΔI_d	Quiescent current change	I_O = 5 mA to 1 A			0.5	mA
		V_I = -11.5 to -25 V			1	
$\Delta V_O/\Delta T$	Output voltage drift	I_O = 5 mA		-0.6		mV/°C
eN	Output noise voltage	B = 10Hz to 100kHz, T_J = 25°C		175		µV
SVR	Supply voltage rejection	ΔV_I = 10 V, f = 120Hz	54	60		dB
V_d	Dropout voltage	I_O = 1 A, T_J = 25°C, ΔV_O = 100 mV		1.1		V
I_{sc}	Short circuit current			1.5		A

1. Load and line regulation are specified at constant junction temperature. Changes in V_O due to heating effects must be taken into account separately. Pulse testing with low duty cycle is used.

Refer to the test circuits, T_J = 0 to 125 °C, V_I = -19 V, I_O = 500 mA, C_I = 2.2 µF, C_O = 1 µF unless otherwise specified.

Table 6. Electrical characteristics of L7912C

Symbol	Parameter	Test conditions	Min.	Typ.	Max.	Unit
V_O	Output voltage	T_J = 25°C	-11.5	-12	-12.5	V
V_O	Output voltage	I_O = -5 mA to -1 A, $P_O \leq$ 15 W V_I = -15.5 to -27 V	-11.4	-12	-12.6	V
ΔV_O(1)	Line regulation	V_I = -14.5 to -30 V, T_J = 25°C			240	mV
		V_I = -16 to -22 V, T_J = 25°C			120	
ΔV_O(1)	Load regulation	I_O = 5 mA to 1.5 A, T_J = 25°C			240	mV
		I_O = 250 to 750 mA, T_J = 25°C			120	
I_d	Quiescent current	T_J = 25°C			3	mA
ΔI_d	Quiescent current change	I_O = 5 mA to 1 A			0.5	mA
		V_I = -15 to -30 V			1	
$\Delta V_O/\Delta T$	Output voltage drift	I_O = 5 mA		-0.8		mV/°C
eN	Output noise voltage	B = 10Hz to 100kHz, T_J = 25°C		200		µV
SVR	Supply voltage rejection	ΔV_I = 10 V, f = 120Hz	54	60		dB
V_d	Dropout voltage	I_O = 1 A, T_J = 25°C, ΔV_O = 100 mV		1.1		V
I_{sc}	Short circuit current			1.5		A

1. Load and line regulation are specified at constant junction temperature. Changes in V_O due to heating effects must be taken into account separately. Pulse testing with low duty cycle is used.

Refer to the test circuits, T_J = 0 to 125 °C, V_I = -23 V, I_O = 500 mA, C_I = 2.2 µF, C_O = 1 µF unless otherwise specified.

Table 7. Electrical characteristics of L7915C

Symbol	Parameter	Test conditions	Min.	Typ.	Max.	Unit
V_O	Output voltage	T_J = 25°C	-14.4	-15	-15.6	V
V_O	Output voltage	I_O = -5 mA to -1 A, $P_O \leq$ 15 W V_I = -18.5 to -30 V	-14.3	-15	-15.7	V
ΔV_O(1)	Line regulation	V_I = -17.5 to -30 V, T_J = 25°C			300	mV
		V_I = -20 to -26 V, T_J = 25°C			150	
ΔV_O(1)	Load regulation	I_O = 5 mA to 1.5 A, T_J = 25°C			300	mV
		I_O = 250 to 750 mA, T_J = 25°C			150	
I_d	Quiescent current	T_J = 25°C			3	mA
ΔI_d	Quiescent current change	I_O = 5 mA to 1 A			0.5	mA
		V_I = -18.5 to -30 V			1	
$\Delta V_O/\Delta T$	Output voltage drift	I_O = 5 mA		-0.9		mV/°C
eN	Output noise voltage	B = 10Hz to 100kHz, T_J = 25°C		250		µV
SVR	Supply voltage rejection	ΔV_I = 10 V, f = 120Hz	54	60		dB
V_d	Dropout voltage	I_O = 1 A, T_J = 25°C, ΔV_O = 100 mV		1.1		V
I_{sc}	Short circuit current			1.3		A

1. Load and line regulation are specified at constant junction temperature. Changes in V_O due to heating effects must be taken into account separately. Pulse testing with low duty cycle is used.

6 Application information

Figure 4. Fixed output regulator

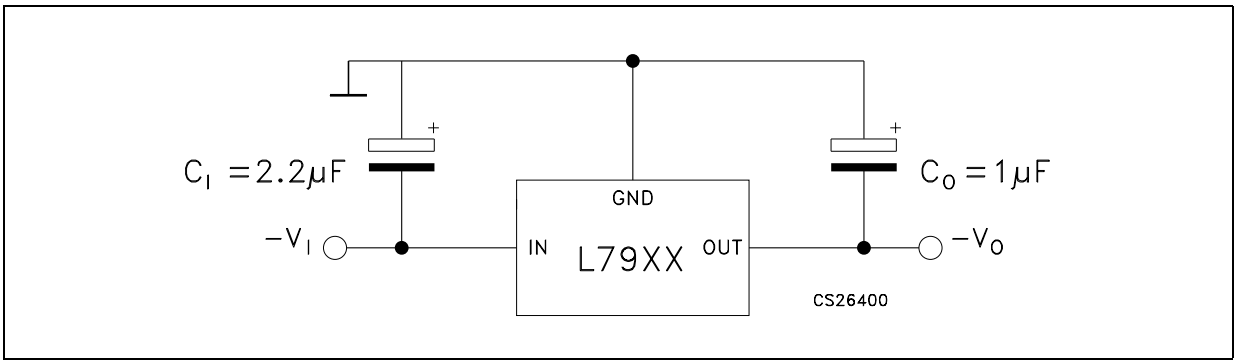

1. To specify an output voltage, substitute voltage value for "XX".
2. Required for stability. For value given, capacitor must be solid tantalum. If aluminium electrolytic are used, at least ten times value should be selected. C1 is required if regulator is located an appreciable distance from power supply filter.
3. To improve transient response. If large capacitors are used, a high current diode from input to output (1N4001 or similar) should be introduced to protect the device from momentary input short circuit.

Figure 5. Split power supply (± 15 V - 1 A)

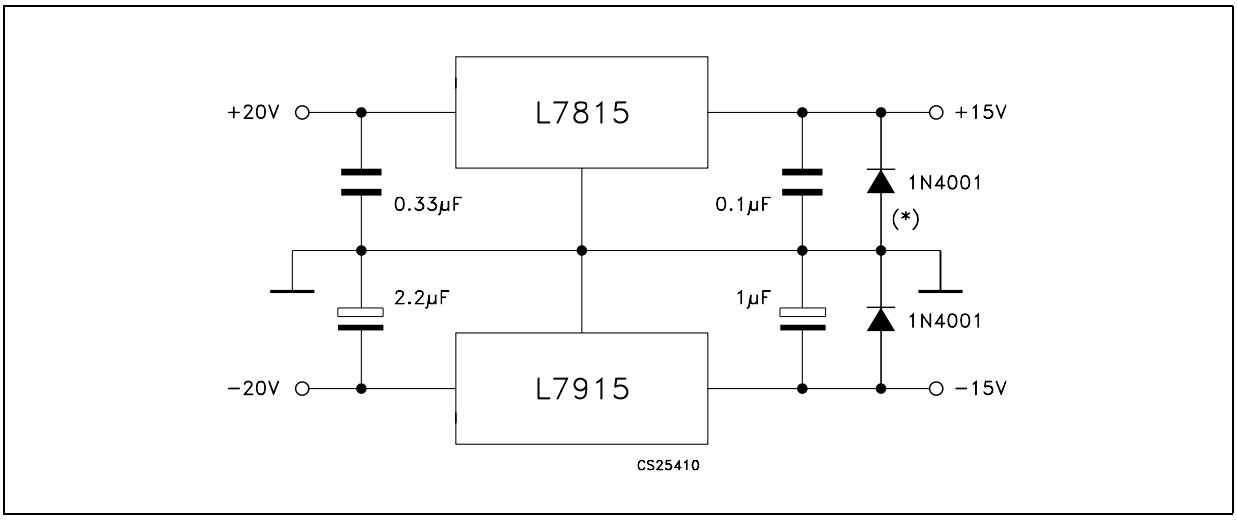

(*) Against potential latch-up problems.

Figure 6. Circuit for increasing output voltage

$V_O=V_{XX}(R_1+R_2)/R_2$

$V_{XX}/R_2 > 3I_d$

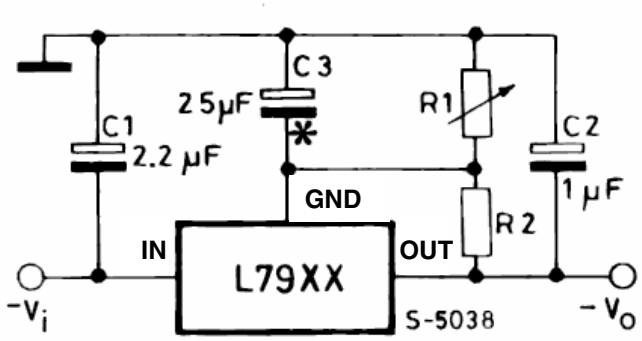

C3 Optional for improved transient response and ripple rejection.

Figure 7. High current negative regulator (- 5 V / 4 A with 5 A current limiting)

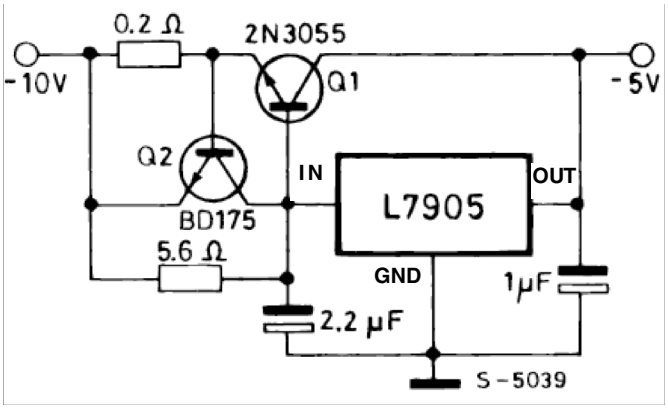

7 Package mechanical data

In order to meet environmental requirements, ST offers these devices in different grades of ECOPACK® packages, depending on their level of environmental compliance. ECOPACK® specifications, grade definitions and product status are available at: *www.st.com*. ECOPACK® is an ST trademark.

Table 8. TO-220 mechanical data

Dim.	Type STD - ST Dual Gauge			Type STD - ST Single Gauge		
	mm.			mm.		
	Min.	Typ.	Max.	Min.	Typ.	Max.
A	4.40		4.60	4.40		4.60
b	0.61		0.88	0.61		0.88
b1	1.14		1.70	1.14		1.70
c	0.48		0.70	0.48		0.70
D	15.25		15.75	15.25		15.75
D1		1.27				
E	10.00		10.40	10.00		10.40
e	2.40		2.70	2.40		2.70
e1	4.95		5.15	4.95		5.15
F	1.23		1.32	0.51		0.60
H1	6.20		6.60	6.20		6.60
J1	2.40		2.72	2.40		2.72
L	13.00		14.00	13.00		14.00
L1	3.50		3.93	3.50		3.93
L20		16.40			16.40	
L30		28.90			28.90	
∅P	3.75		3.85	3.75		3.85
Q	2.65		2.95	2.65		2.95

Note: In spite of some difference in tolerances, the packages are compatible.

Figure 8. Drawing dimension TO-220 (type STD-ST Dual Gauge)

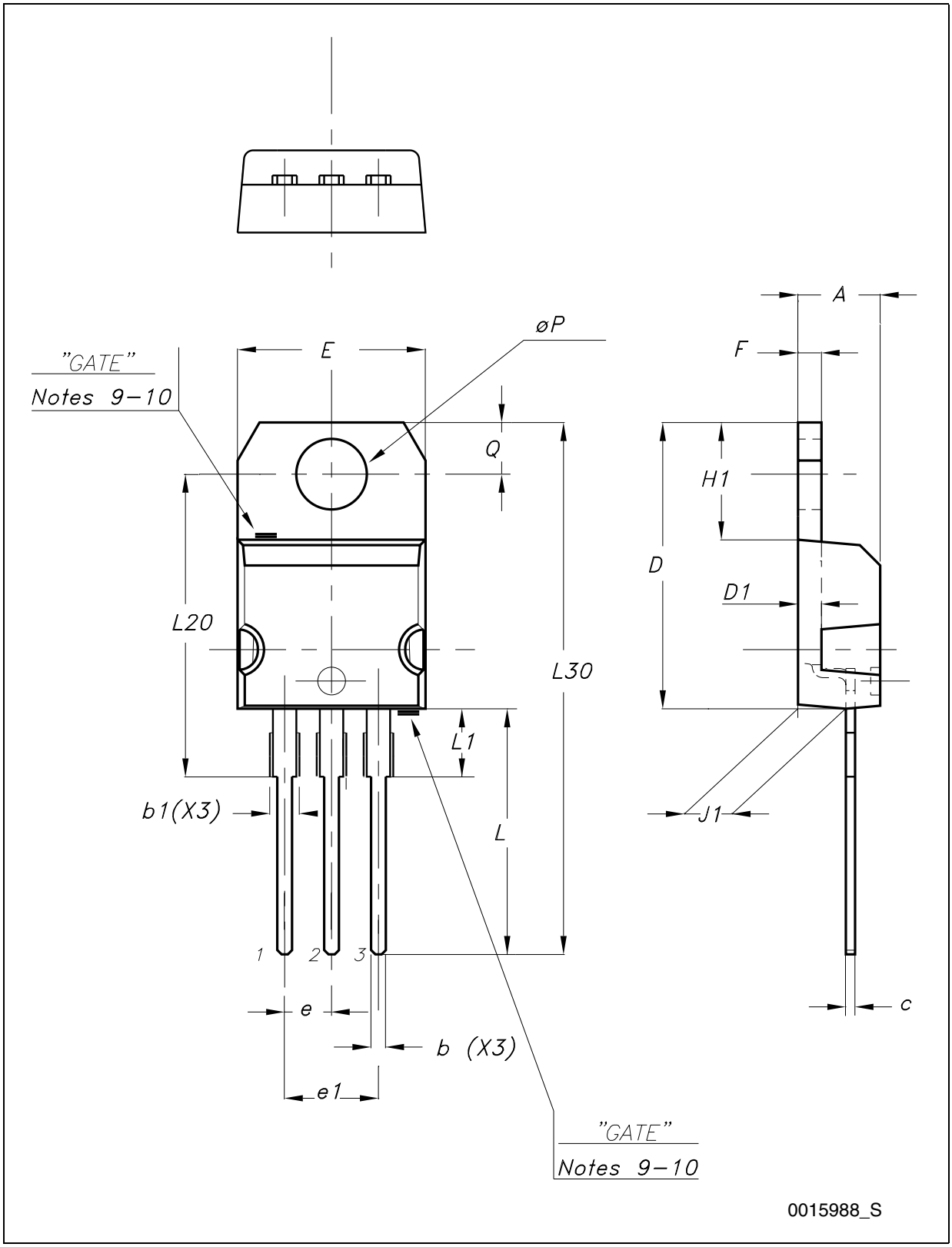

Figure 9. Drawing dimension TO-220 (type STD-ST Single Gauge)

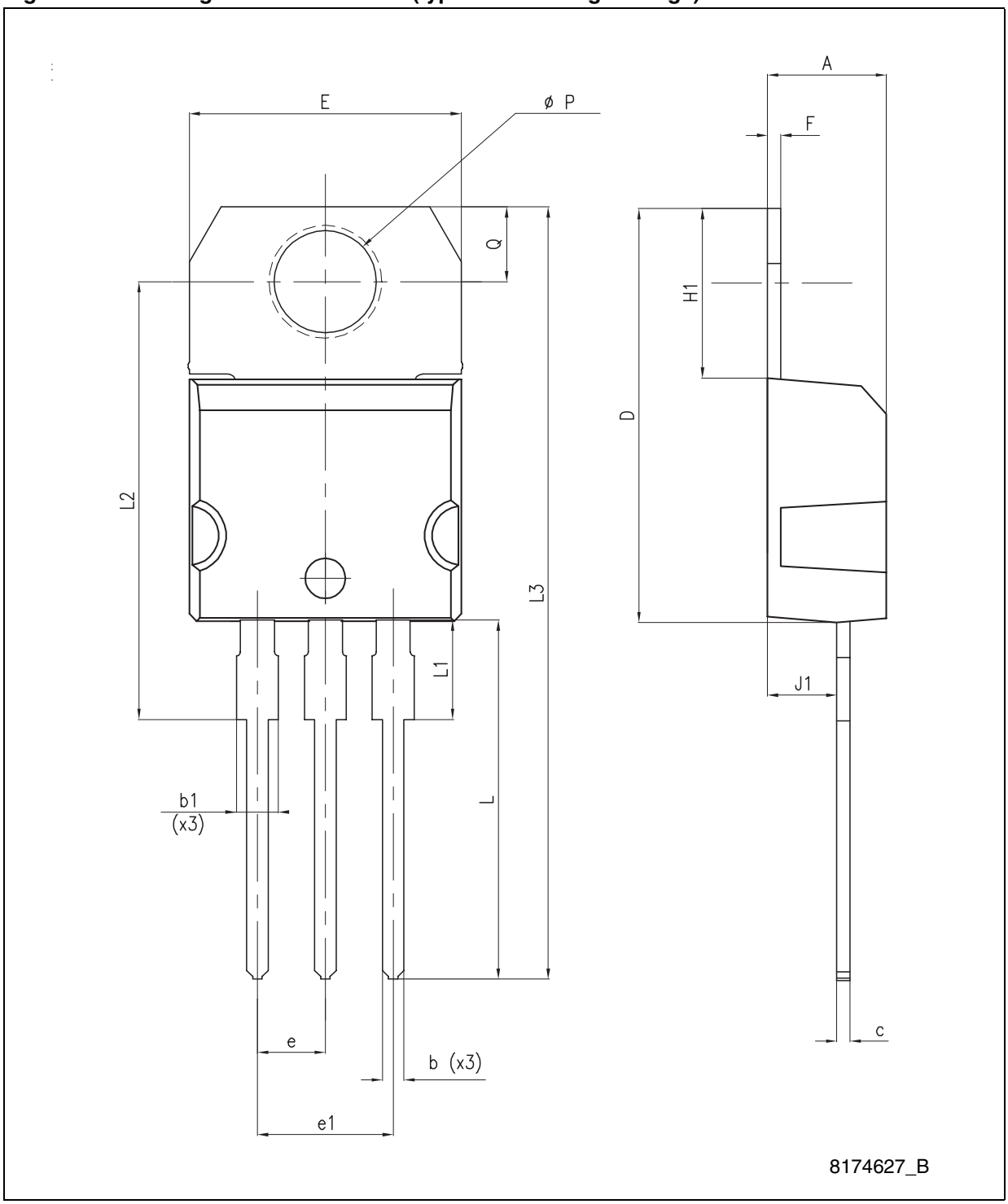

Figure 10. Drawing dimension tube for TO-220 Dual Gauge (mm)

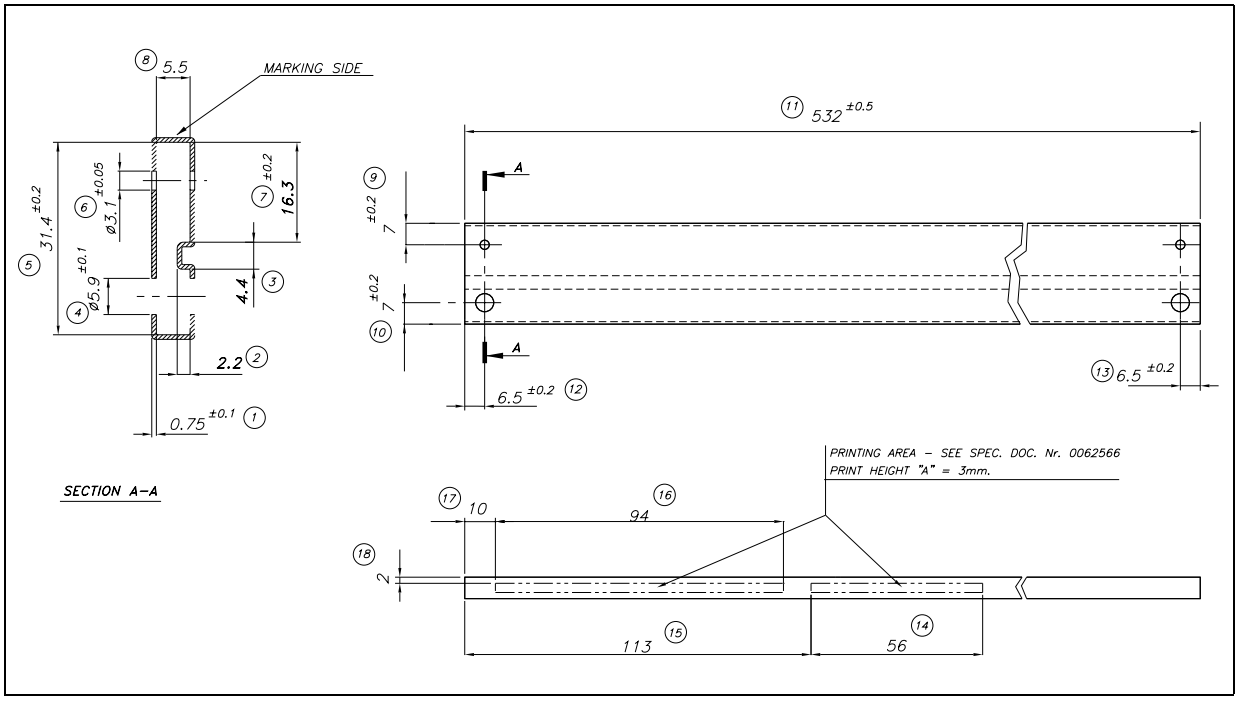

Figure 11. Drawing dimension tube for TO-220 Single Gauge (mm)

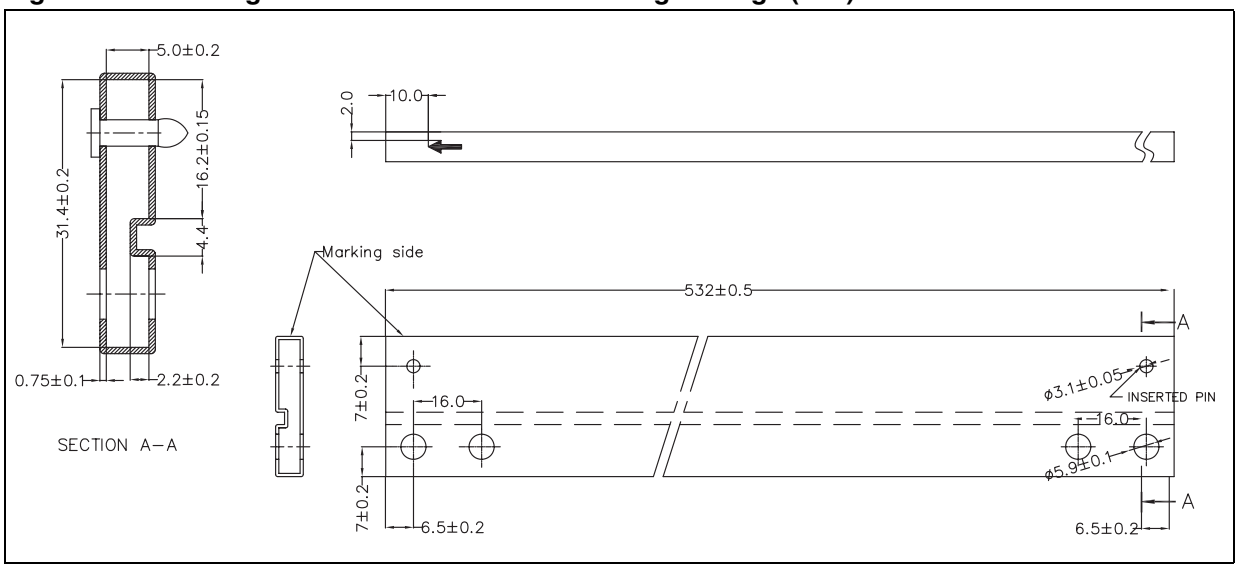

TO-220FP mechanical data

Dim.	mm.			inch.		
	Min.	Typ	Max.	Min.	Typ.	Max.
A	4.40		4.60	0.173		0.181
B	2.5		2.7	0.098		0.106
D	2.5		2.75	0.098		0.108
E	0.45		0.70	0.017		0.027
F	0.75		1	0.030		0.039
F1	1.15		1.50	0.045		0.059
F2	1.15		1.50	0.045		0.059
G	4.95		5.2	0.194		0.204
G1	2.4		2.7	0.094		0.106
H	10.0		10.40	0.393		0.409
L2		16			0.630	
L3	28.6		30.6	1.126		1.204
L4	9.8		10.6	0.385		0.417
L5	2.9		3.6	0.114		0.142
L6	15.9		16.4	0.626		0.645
L7	9		9.3	0.354		0.366
DIA.	3		3.2	0.118		0.126

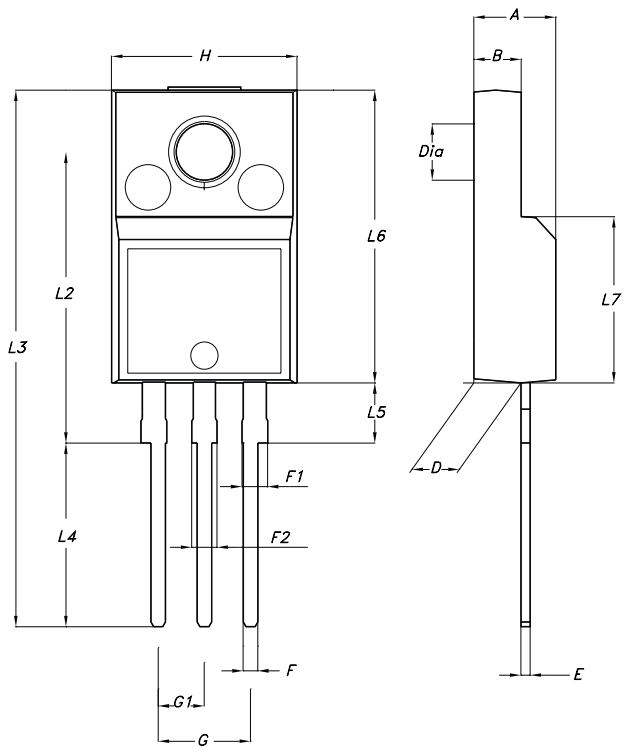

7012510A-H

Figure 12. Drawing dimension D²PAK (type STD-ST)

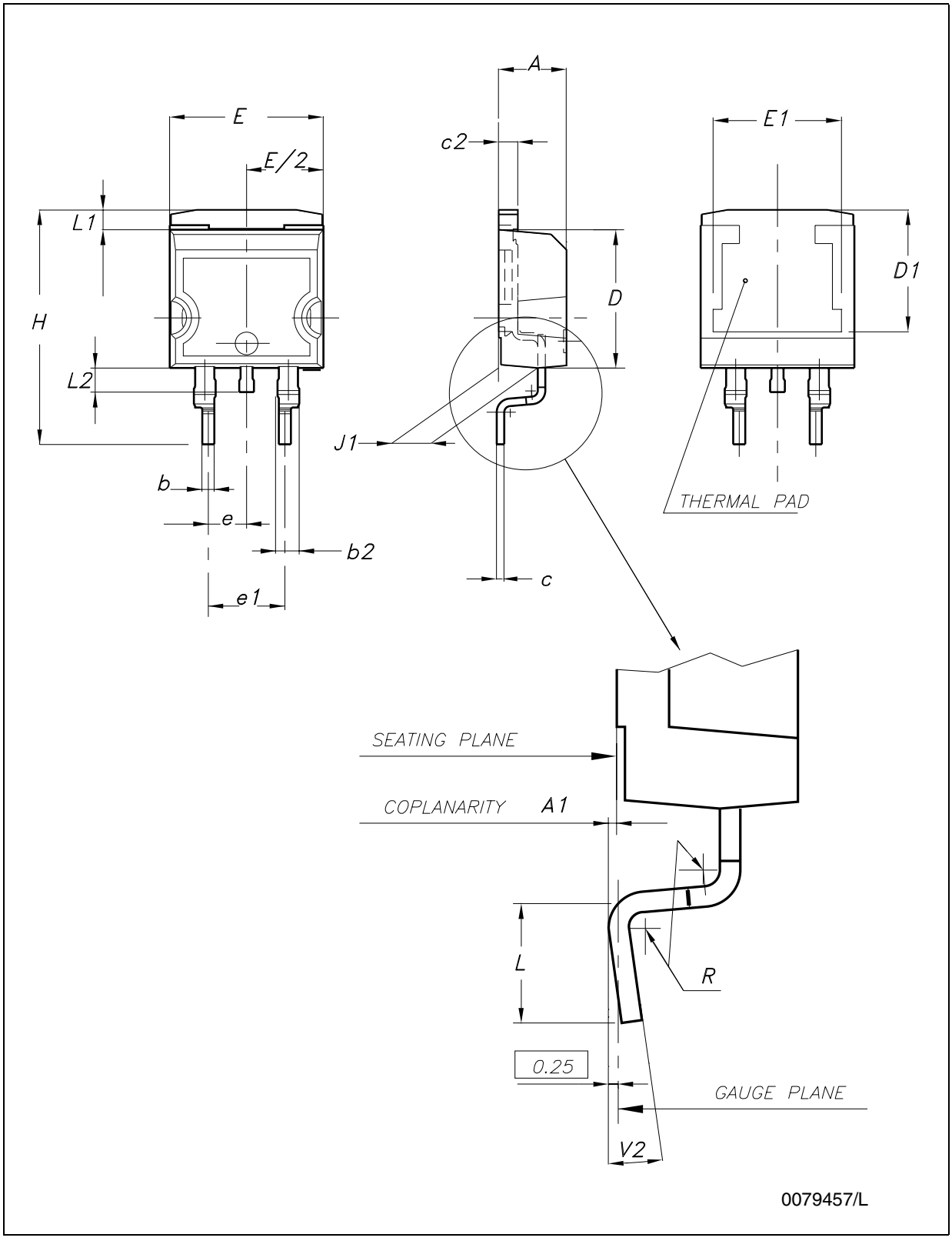

Figure 13. Drawing dimension D²PAK (type WOOSEOK-subcon.)

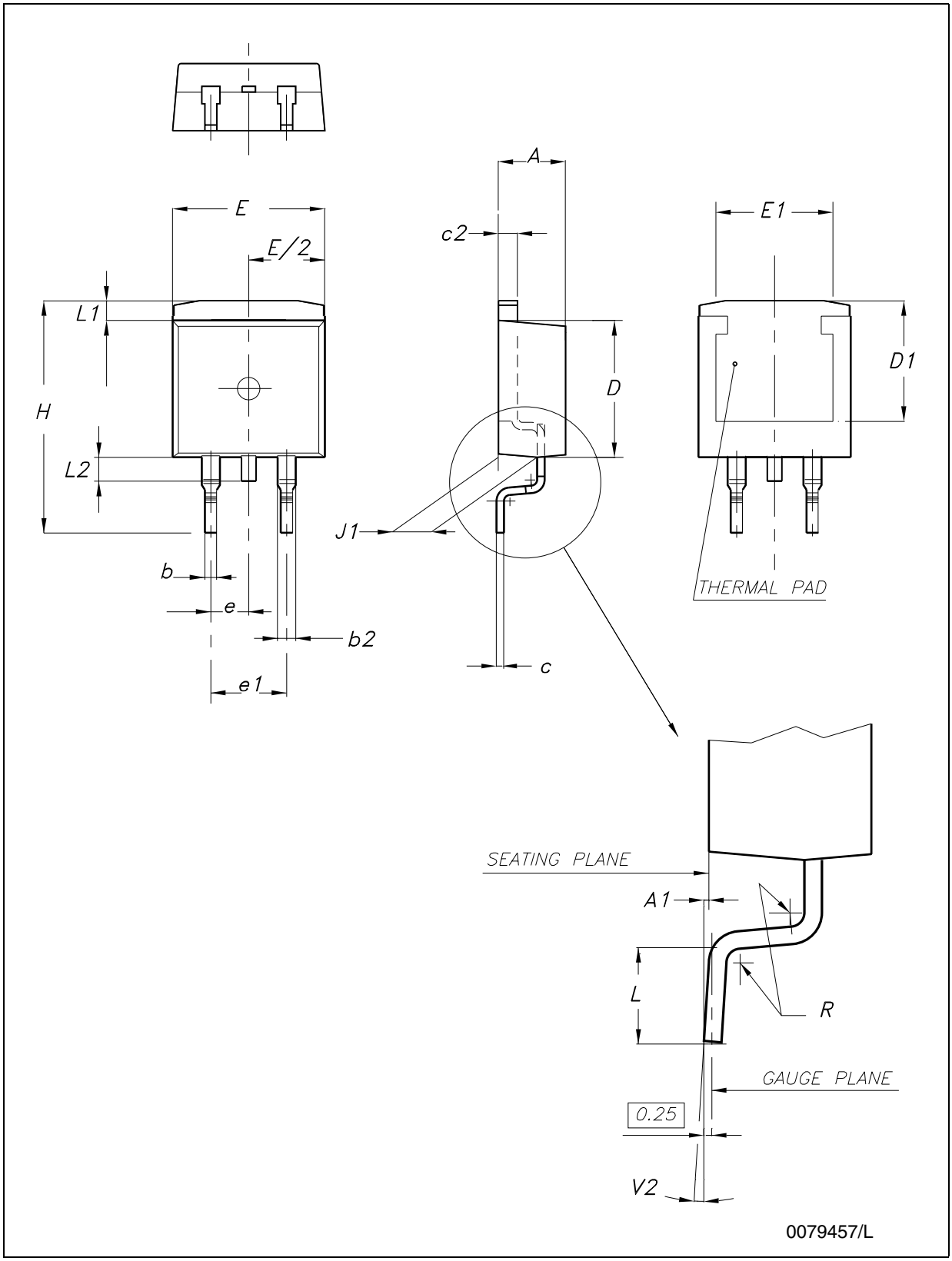

Table 9. D²PAK mechanical data

Dim.	Type STD-ST			Type WOOSEOK-subcon.		
	mm.			mm.		
	Min.	Typ.	Max.	Min.	Typ.	Max.
A	4.40		4.60	4.30		4.70
A1	0.03		0.23	0		0.20
b	0.70		0.93	0.70		0.90
b2	1.14		1.70	1.17		1.37
c	0.45		0.60	0.45	0.50	0.60
c2	1.23		1.36	1.25	1.30	1.40
D	8.95		9.35	9	9.20	9.40
D1	7.50			7.50		
E	10		10.40	9.80		10.20
E1	8.50			7.50		
e		2.54			2.54	
e1	4.88		5.28		5.08	
H	15		15.85	15	15.30	15.60
J1	2.49		2.69	2.20		2.60
L	2.29		2.79	1.79		2.79
L1	1.27		1.40	1		1.40
L2	1.30		1.75	1.20		1.60
R		0.4			0.30	
V2	0°		8°	0°		3°

Note: The D²PAK package coming from the subcontractor WOOSEOK is fully compatible with the ST's package suggested footprint.

Figure 14. D²PAK footprint recommended data

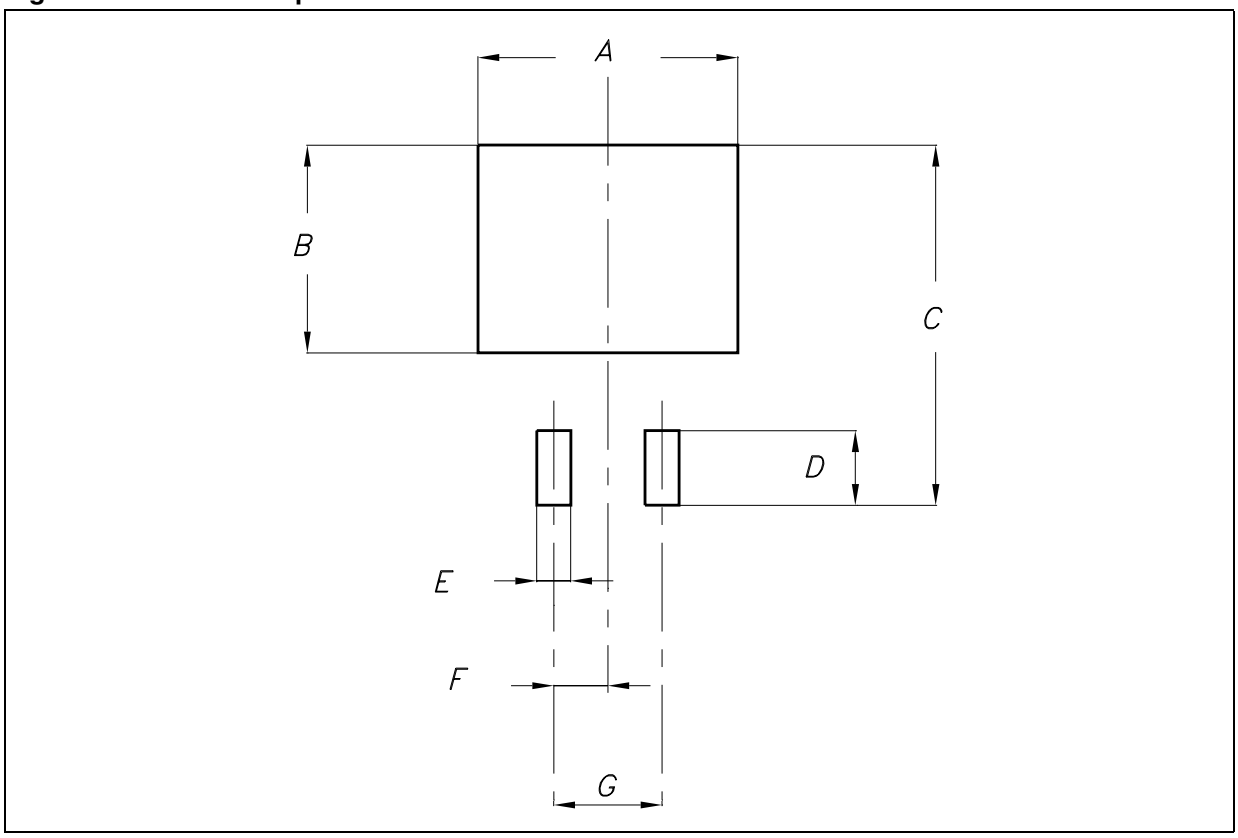

Table 10. Footprint data

Values		
Dim.	**mm.**	**inch.**
A	12.20	0.480
B	9.75	0.384
C	16.90	0.665
D	3.50	0.138
E	1.60	0.063
F	2.54	0.100
G	5.08	0.200

Tape & reel D^2PAK-P^2PAK-D^2PAK/A-P^2PAK/A mechanical data

Dim.	mm.			inch.		
	Min.	Typ.	Max.	Min.	Typ.	Max.
A			180			7.086
C	12.8	13.0	13.2	0.504	0.512	0.519
D	20.2			0.795		
N	60			2.362		
T			14.4			0.567
Ao	10.50	10.6	10.70	0.413	0.417	0.421
Bo	15.70	15.80	15.90	0.618	0.622	0.626
Ko	4.80	4.90	5.00	0.189	0.193	0.197
Po	3.9	4.0	4.1	0.153	0.157	0.161
P	11.9	12.0	12.1	0.468	0.472	0.476

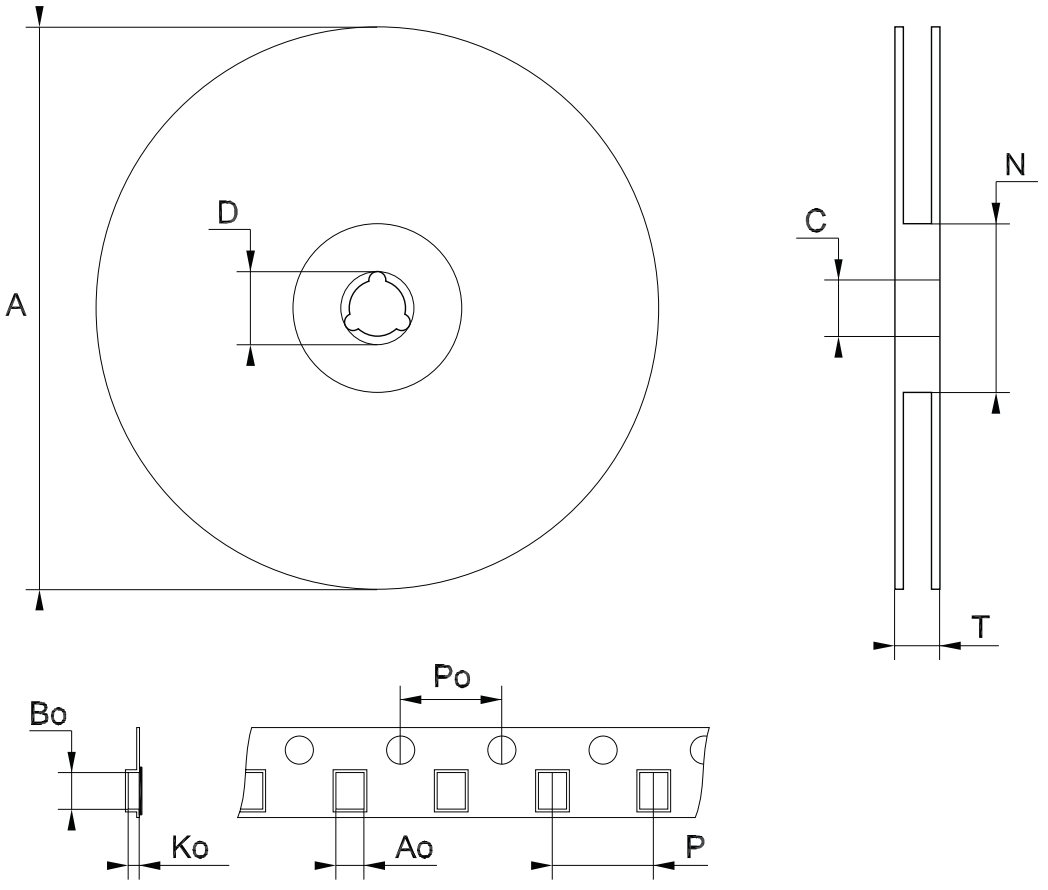

Note: Drawing not in scale

8 Revision history

Table 11. Document revision history

Date	Revision	Changes
22-Jun-2004	9	Order codes updated Table 3.
31-Aug-2005	10	Add new order codes (TO-220 E Type) on Table 3.
19-Jan-2007	11	D²PAK mechanical data updated and add footprint data.
06-Jun-2007	12	Order codes updated.
25-Oct-2007	13	Modified: *Figure 3*, *Figure 4*, *Figure 6* and *Figure 7*.
05-Dec-2007	14	Modified: *Table 1*.
18-Feb-2008	15	Modified: *Table 1 on page 1*.
15-Jul-2008	16	Modified: *Table 1 on page 1*.
19-Jan-2010	17	Modified: *Table 8 on page 13*, added: *Figure 8 on page 14*, *Figure 9 on page 15*, *Figure 10* and *Figure 11 on page 16*.
26-May-2010	18	Modified: V_I parameter *Table 2 on page 5*.
12-Nov-2010	19	Modified: R_{thJC} value for TO-220 *Table 3 on page 5*.
18-Nov-2011	20	Added: order codes L7905CV-DG, L7912CV-DG and L7915CV-DG *Table 1 on page 1*.
15-May-2012	21	Added: order codes L7908CV-DG *Table 1 on page 1*.

Please Read Carefully:

Information in this document is provided solely in connection with ST products. STMicroelectronics NV and its subsidiaries (“ST”) reserve the right to make changes, corrections, modifications or improvements, to this document, and the products and services described herein at any time, without notice.

All ST products are sold pursuant to ST’s terms and conditions of sale.

Purchasers are solely responsible for the choice, selection and use of the ST products and services described herein, and ST assumes no liability whatsoever relating to the choice, selection or use of the ST products and services described herein.

No license, express or implied, by estoppel or otherwise, to any intellectual property rights is granted under this document. If any part of this document refers to any third party products or services it shall not be deemed a license grant by ST for the use of such third party products or services, or any intellectual property contained therein or considered as a warranty covering the use in any manner whatsoever of such third party products or services or any intellectual property contained therein.

UNLESS OTHERWISE SET FORTH IN ST’S TERMS AND CONDITIONS OF SALE ST DISCLAIMS ANY EXPRESS OR IMPLIED WARRANTY WITH RESPECT TO THE USE AND/OR SALE OF ST PRODUCTS INCLUDING WITHOUT LIMITATION IMPLIED WARRANTIES OF MERCHANTABILITY, FITNESS FOR A PARTICULAR PURPOSE (AND THEIR EQUIVALENTS UNDER THE LAWS OF ANY JURISDICTION), OR INFRINGEMENT OF ANY PATENT, COPYRIGHT OR OTHER INTELLECTUAL PROPERTY RIGHT.

UNLESS EXPRESSLY APPROVED IN WRITING BY TWO AUTHORIZED ST REPRESENTATIVES, ST PRODUCTS ARE NOT RECOMMENDED, AUTHORIZED OR WARRANTED FOR USE IN MILITARY, AIR CRAFT, SPACE, LIFE SAVING, OR LIFE SUSTAINING APPLICATIONS, NOR IN PRODUCTS OR SYSTEMS WHERE FAILURE OR MALFUNCTION MAY RESULT IN PERSONAL INJURY, DEATH, OR SEVERE PROPERTY OR ENVIRONMENTAL DAMAGE. ST PRODUCTS WHICH ARE NOT SPECIFIED AS "AUTOMOTIVE GRADE" MAY ONLY BE USED IN AUTOMOTIVE APPLICATIONS AT USER’S OWN RISK.

Resale of ST products with provisions different from the statements and/or technical features set forth in this document shall immediately void any warranty granted by ST for the ST product or service described herein and shall not create or extend in any manner whatsoever, any liability of ST.

ST and the ST logo are trademarks or registered trademarks of ST in various countries.

Information in this document supersedes and replaces all information previously supplied.

The ST logo is a registered trademark of STMicroelectronics. All other names are the property of their respective owners.

© 2012 STMicroelectronics - All rights reserved

STMicroelectronics group of companies

Australia - Belgium - Brazil - Canada - China - Czech Republic - Finland - France - Germany - Hong Kong - India - Israel - Italy - Japan - Malaysia - Malta - Morocco - Philippines - Singapore - Spain - Sweden - Switzerland - United Kingdom - United States of America

www.st.com

Looking for pricing, stock, or lifecycle information?

Click below to explore more details on WIN SOURCE:

- View L7905CV on WIN SOURCE
- STMicroelectronics Information

Optimize Your Supply Chain with WIN SOURCE Solutions

- Global Sourcing Solution
- Obsolete Management
- Cost Control Management
- Shortage Management
- Alternative Solution
- Excess Inventory Management