THE DATASHEET OF

1367627-1

THIS DRAWING IS UNPUBLISHED. RELEASED FOR PUBLICATION 20
© COPYRIGHT 20 BY - ALL RIGHTS RESERVED.

LOC	DIST
ES	00

REVISIONS

P	LTR	DESCRIPTION	DATE	DWN	APVD
	B	ECO-08-002182	14JAN08	ML	SY
	C	REVISED PER ECO-12-003825	17FEB2012	JY	AC
	D	REVISED PER ECO-19-001591	31JAN2019	ES	SH

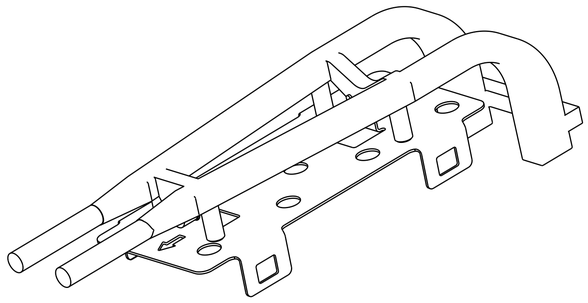

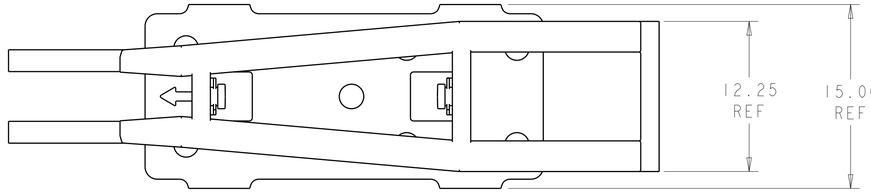

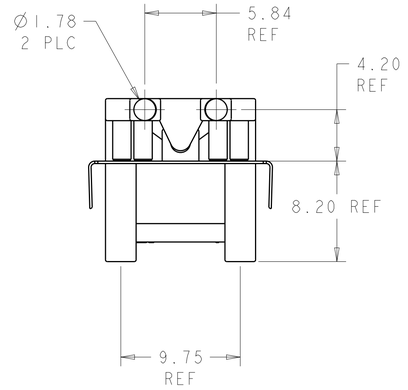

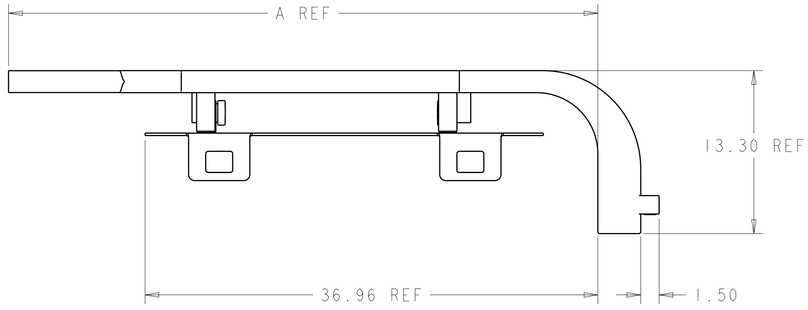

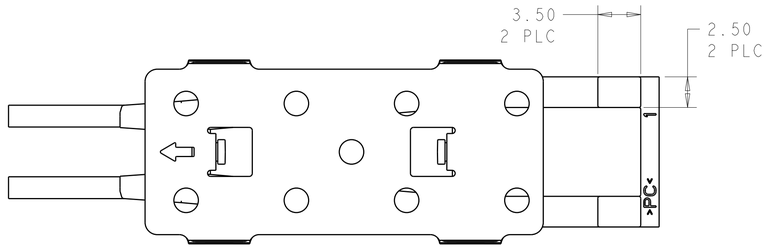

1. MATERIAL:
   LIGHTPIPE: POLYCARBONATE, CLEAR
   LIGHTPIPE BRACKET: STAINESS STEEL.

DIM A	PART NUMBER
46.90	1367627-8
47.00	1367627-2
48.10	1367627-1

THIS DRAWING IS A CONTROLLED DOCUMENT.

DIMENSIONS: mm

TOLERANCES UNLESS OTHERWISE SPECIFIED:
0 PLC ±-
1 PLC ±-
2 PLC ±0.10
3 PLC ±-
4 PLC ±-
ANGLES ±-

MATERIAL -
FINISH -

DWN ERIC SHI 31JAN2019
CHK SEAN HAN 31JAN2019
APVD SEAN HAN 31JAN2019
PRODUCT SPEC -
APPLICATION SPEC -
WEIGHT -

TE Connectivity

NAME -
LIGHT PIPE ASSEMBLY FOR 1X1 SFP
-

SIZE	CAGE CODE	DRAWING NO	RESTRICTED TO
A1	00779	C-1367627	

CUSTOMER DRAWING | SCALE 2:1 | SHEET 1 OF 3 | REV D

THIS DRAWING IS UNPUBLISHED. RELEASED FOR PUBLICATION 20
© COPYRIGHT 20 BY - ALL RIGHTS RESERVED.

LOC	DIST
ES	00

REVISIONS

P	LTR	DESCRIPTION	DATE	DWN	APVD
	-	SEE SHEET 1	-	-	-

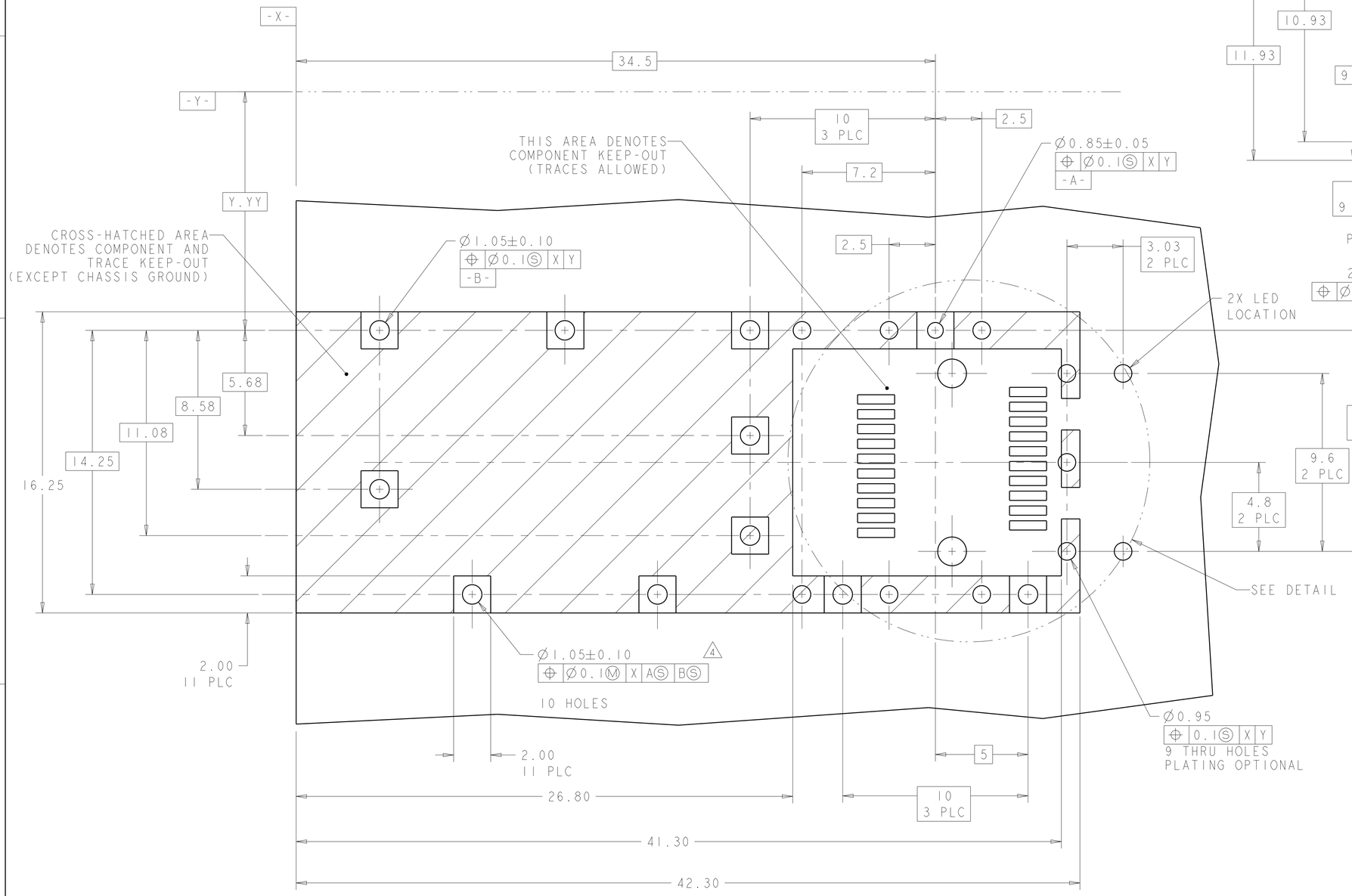

RECOMMENDED PCB LAYOUT
SCALE 8:1

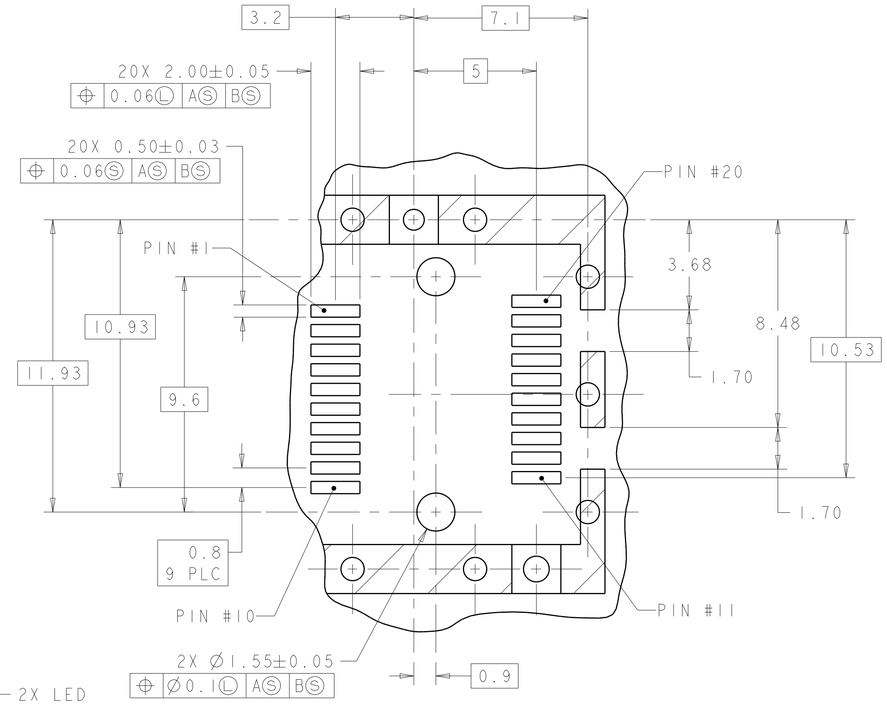

DETAIL G
SCALE 8:1

THIS DRAWING IS A CONTROLLED DOCUMENT.	DWN ERIC SHI 31JAN2019	TE Connectivity	
DIMENSIONS: mm	CHK SEAN HAN 31JAN2019	NAME -	
TOLERANCES UNLESS OTHERWISE SPECIFIED: 0 PLC ±- 1 PLC ±- 2 PLC ±0.10 3 PLC ±- 4 PLC ±- ANGLES ±-	APVD SEAN HAN 31JAN2019	LIGHT PIPE ASSEMBLY FOR 1X1 SFP -	
MATERIAL - -	PRODUCT SPEC -	SIZE A1	CAGE CODE 00779
FINISH - -	APPLICATION SPEC -	DRAWING NO C-1367627	RESTRICTED TO
	WEIGHT -	CUSTOMER DRAWING	SCALE 2:1 SHEET 2 OF 3 REV D

THIS DRAWING IS UNPUBLISHED. RELEASED FOR PUBLICATION 20
© COPYRIGHT 20 BY - ALL RIGHTS RESERVED.

LOC	DIST
ES	00

REVISIONS

P	LTR	DESCRIPTION	DATE	DWN	APVD
	-	SEE SHEET 1	-	-	-

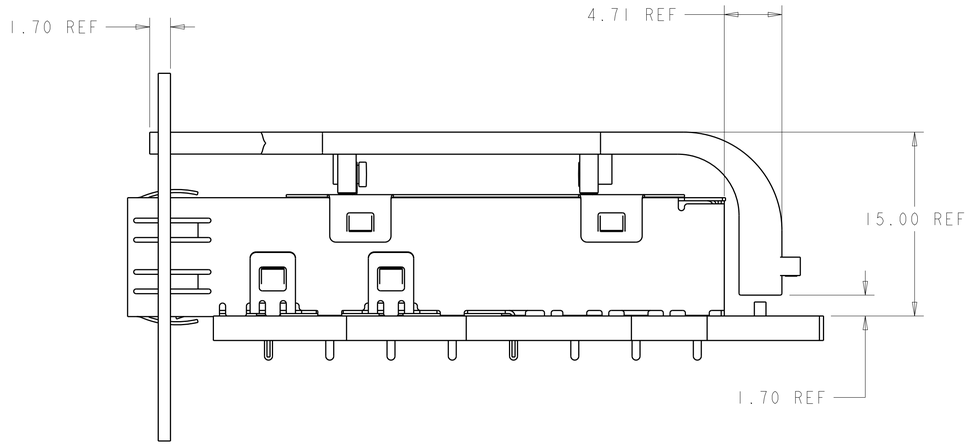

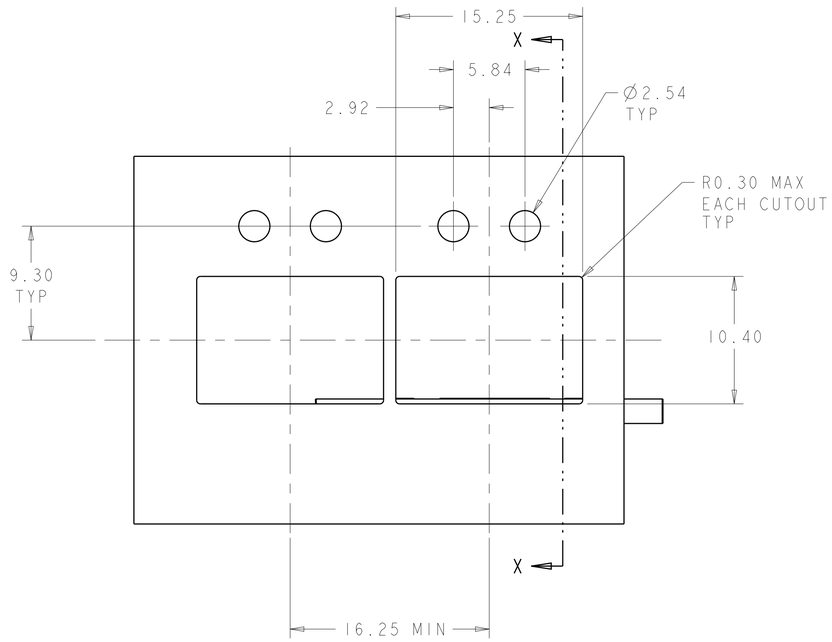

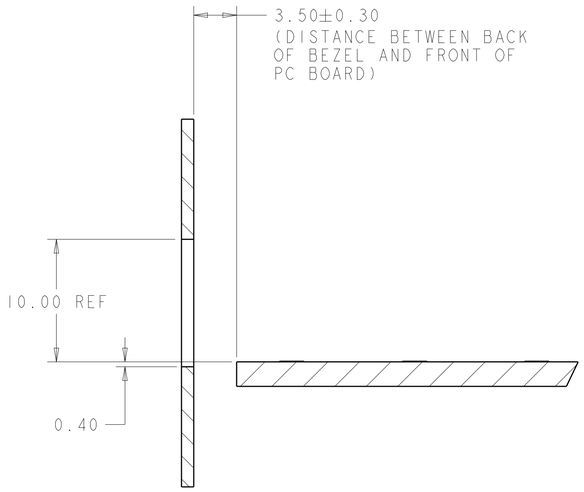

SECTION X-X

RECOMMENDED BEZEL CUTOUT
AND PC BOARD-BEZEL POSITION

THIS DRAWING IS A CONTROLLED DOCUMENT.		DWN ERIC SHI 31JAN2019	TE Connectivity
DIMENSIONS: mm	TOLERANCES UNLESS OTHERWISE SPECIFIED: 0 PLC ± / 1 PLC ± / 2 PLC ±0.10 / 3 PLC ± / 4 PLC ± / ANGLES ±	CHK SEAN HAN 31JAN2019	NAME -
		APVD SEAN HAN 31JAN2019	LIGHT PIPE ASSEMBLY FOR IXI SFP
		PRODUCT SPEC -	-
		APPLICATION SPEC -	SIZE A1 / CAGE CODE 00779 / DRAWING NO C-1367627 / RESTRICTED TO
MATERIAL - -	FINISH - -	WEIGHT -	CUSTOMER DRAWING / SCALE 2:1 / SHEET 3 OF 3 / REV D

Looking for pricing, stock, or lifecycle information?

Click below to explore more details on WIN SOURCE:

- View 1367627-1 on WIN SOURCE
- TE Connectivity Information

Optimize Your Supply Chain with WIN SOURCE Solutions

- Global Sourcing Solution
- Obsolete Management
- Cost Control Management
- Shortage Management
- Alternative Solution
- Excess Inventory Management