THE DATASHEET OF

CD4069UBM96

CD4069UB CMOS hex inverter

1 Features

- Standardized symmetrical output characteristics
- Medium speed operation: t_{PHL}, t_{PLH} = 30 ns at 10 V (Typical)
- 100% Tested for quiescent current at 20 V
- Maximum input current of 1 µA at 18 V over full package-temperature range, 100 nA at 18 V and 25°C
- Meets all requirements of JEDEC tentative standard No. 13B, *Standard Specifications for Description of B Series CMOS Devices*

2 Applications

- Logic inversion
- Pulse shaping
- Oscillators
- High-input-impedance amplifiers

3 Description

The CD4069UB device consist of six CMOS inverter circuits. These devices are intended for all general-purpose inverter applications where the medium-power TTL-drive and logic-level-conversion capabilities of circuits such as the CD4009 and CD4049 hex inverter and buffers are not required.

Device Information(1)

PART NUMBER	PACKAGE (PINS)	BODY SIZE (NOM)
CD4069UBE	PDIP (14)	19.30 mm × 6.35 mm
CD4069UBF	CDIP (14)	19.56 mm × 6.67 mm
CD4069UBM	SOIC (14)	8.65 mm × 3.91 mm
CD4069UBNSR	SO (14)	10.30 mm × 5.30 mm
CD4069UBPW	TSSOP (14)	5.00 mm × 4.40 mm

(1) For all available packages, see the orderable addendum at the end of the data sheet.

CD4069UB Functional Diagram

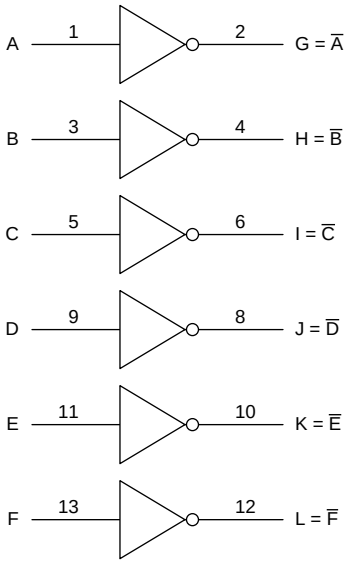

V_{DD} = Pin 14
V_{SS} = Pin 7

An IMPORTANT NOTICE at the end of this data sheet addresses availability, warranty, changes, use in safety-critical applications, intellectual property matters and other important disclaimers. PRODUCTION DATA.

Table of Contents

1 Features ... 1
2 Applications ... 1
3 Description ... 1
4 Revision History ... 2
5 Pin Configuration and Functions ... 3
6 Specifications ... 4
6.1 Absolute Maximum Ratings ... 4
6.2 ESD Ratings ... 4
6.3 Recommended Operating Conditions ... 4
6.4 Thermal Information ... 4
6.5 Electrical Characteristics – Dynamic ... 5
6.6 Electrical Characteristics – Static ... 5
6.7 Typical Characteristics ... 8
7 Parameter Measurement Information ... 9
8 Detailed Description ... 13
8.1 Overview ... 13
8.2 Functional Block Diagram ... 13
8.3 Feature Description ... 13
8.4 Device Functional Modes ... 13
9 Application and Implementation ... 14
9.1 Application Information ... 14
9.2 Typical Application ... 14
10 Power Supply Recommendations ... 16
11 Layout ... 16
11.1 Layout Guidelines ... 16
11.2 Layout Example ... 16
12 Device and Documentation Support ... 17
12.1 Device Support ... 17
12.2 Documentation Support ... 17
12.3 Community Resource ... 17
12.4 Trademarks ... 17
12.5 Electrostatic Discharge Caution ... 17
12.6 Glossary ... 17
13 Mechanical, Packaging, and Orderable Information ... 17

4 Revision History

NOTE: Page numbers for previous revisions may differ from page numbers in the current version.

Changes from Revision D (February 2016) to Revision E — **Page**

- Removed artifact "–" at t_{PHL} term on the second Features bullet ... 1
- Corrected V_I spec MIN/MAX values in the Abs Max Ratings table ... 4
- Corrected parameter I_{DD} max term to I_{DD} in the Elec Characteristics table ... 5
- Corrected parameter I_{OL} min term to I_{OL} in the Elec Characteristics table ... 5
- Corrected parameter V_{OL} max term to V_{OL} in the Elec Characteristics table ... 6
- Corrected parameter V_{IL} max term to V_{IL} in the Elec Characteristics table ... 6
- Corrected parameter V_{IH} min term to V_{IH} in the Elec Characteristics table ... 6
- Corrected parameter I_{IN} max term to I_{IN} in the Elec Characteristics table ... 7
- Added Y-axis label to Figure 1 image object ... 8
- Changed text string from " $–t_{PHL}$" to "of t_{PHL}" in the Feature Description paragraph. ... 13

Changes from Revision C (August 2003) to Revision D — **Page**

- Added *ESD Ratings* table, *Feature Description* section, *Device Functional Modes*, *Application and Implementation* section, *Power Supply Recommendations* section, *Layout* section, *Device and Documentation Support* section, and *Mechanical, Packaging, and Orderable Information* section ... 1

Copyright © 1998–2019, Texas Instruments Incorporated

5 Pin Configuration and Functions

D, J, N, NS, and PW Packages
14-Pin PDIP, CDIP, SOIC, SO, and TSSOP
Top View

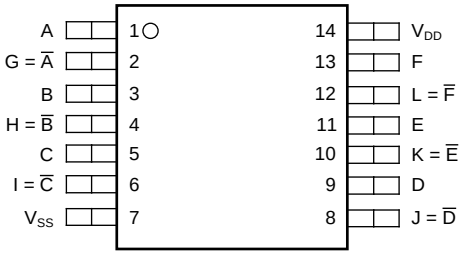

Pin Functions

PIN		I/O	DESCRIPTION
NAME	NO.		
A	1	I	A input
B	3	I	B input
C	5	I	C input
D	9	I	D input
E	11	I	E input
F	13	I	F input
G = $\overline{A}$	2	O	G output
H = $\overline{B}$	4	O	H output
I = $\overline{C}$	6	O	I output
J = $\overline{D}$	8	O	J output
K = $\overline{E}$	10	O	K output
L = $\overline{F}$	12	O	L output
V_{DD}	14	—	Positive supply
V_{SS}	7	—	Negative supply

Copyright © 1998–2019, Texas Instruments Incorporated

6 Specifications

6.1 Absolute Maximum Ratings

over operating free-air temperature range (unless otherwise noted)(1)

			MIN	MAX	UNIT
V_{DD}	DC supply-voltage (voltages referenced to V_{SS} terminal)		–0.5	20	V
V_I	Input voltage, all inputs		–0.5	V_{DD} + 0.5	V
I_{IK}	DC input current, any one input		–10	10	mA
P_D	Power dissipation per package	–55°C to 100°C		500	mW
		100°C to 125°C	12	200	
	Device dissipation per output transistor	Full range (all package types)		100	mW
	Lead temperature(2)			265	°C
T_J	Junction temperature			150	°C
T_{stg}	Storage temperature		–65	150	°C

(1) Stresses beyond those listed under *Absolute Maximum Ratings* may cause permanent damage to the device. These are stress ratings only, which do not imply functional operation of the device at these or any other conditions beyond those indicated under *Recommended Operating Conditions*. Exposure to absolute-maximum-rated conditions for extended periods may affect device reliability.
(2) During soldering at distance 1/16 inch ± 1/32 inch (1.59 mm ± 0.79 mm) from case for 10 s maximum

6.2 ESD Ratings

			VALUE	UNIT
$V_{(ESD)}$	Electrostatic discharge	Human-body model (HBM), per ANSI/ESDA/JEDEC JS-001(1)	±500	V
		Charged-device model (CDM), per JEDEC specification JESD22-C101(2)	±200	

(1) JEDEC document JEP155 states that 500-V HBM allows safe manufacturing with a standard ESD control process.
(2) JEDEC document JEP157 states that 250-V CDM allows safe manufacturing with a standard ESD control process.

6.3 Recommended Operating Conditions

over operating free-air temperature range (unless otherwise noted)

		MIN	MAX	UNIT
V_{DD}	Supply voltage	3	18	V
T_A	Operating temperature	–55	125	°C

6.4 Thermal Information

THERMAL METRIC(1)		CD4069UB					UNIT
		D (SOIC)	J (CDIP)	N (PDIP)	NS (SO)	PW (TSSOP)	
		14 PINS	14 PINS	14 PINS	14 PINS	14 PINS	
$R_{\theta JA}$	Junction-to-ambient thermal resistance	94.9	—	57.9	91.2	122.1	°C/W
$R_{\theta JC(top)}$	Junction-to-case (top) thermal resistance	56.4	28.5	45.5	48.8	50.8	°C/W
$R_{\theta JB}$	Junction-to-board thermal resistance	49.2	—	37.7	50	63.8	°C/W
ψ_{JT}	Junction-to-top characterization parameter	21.1	—	30.6	15	6.3	°C/W
ψ_{JB}	Junction-to-board characterization parameter	48.9	—	37.6	49.6	63.3	°C/W
$R_{\theta JC(bot)}$	Junction-to-case (bottom) thermal resistance	N/A	N/A	N/A	N/A	N/A	°C/W

(1) For more information about traditional and new thermal metrics, see the *Semiconductor and IC Package Thermal Metrics* application report, SPRA953.

Copyright © 1998–2019, Texas Instruments Incorporated

6.5 Electrical Characteristics – Dynamic

T_A = 25°C; input t_r, t_f = 20 ns; C_L = 50 pF; R_L = 200 kΩ (unless otherwise noted)

PARAMETER		TEST CONDITIONS	MIN	TYP	MAX	UNIT
t_{PLH}, t_{PHL}	Propagation delay time	V_{DD} (V) = 5		55	110	ns
		V_{DD} (V) = 10		30	60	
		V_{DD} (V) = 15		25	50	
t_{THL}, t_{TLH}	Transition time	V_{DD} (V) = 5		100	200	ns
		V_{DD} (V) = 10		50	100	
		V_{DD} (V) = 15		40	80	
C_{IN}	Input capacitance	Any input		10	15	pF

6.6 Electrical Characteristics – Static

T_A = 25°C; input t_r, t_f = 20 ns; C_L = 50 pF; R_L = 200 kΩ (unless otherwise noted)

PARAMETER		TEST CONDITIONS		MIN	TYP	MAX	UNIT
I_{DD}	Quiescent device current	V_{IN} = 0V or 5 V , V_{DD} = 5 V	T_A = –55°C			0.25	µA
			T_A = –40°C			0.25	
			T_A = 25°C		0.01	0.25	
			T_A = 85°C			7.5	
			T_A = 125°C			7.5	
		V_{IN} = 0 or 10 V, V_{DD} = 10 V	T_A = –55°C			0.5	
			T_A = –40°C			0.5	
			T_A = 25°C		0.01	0.5	
			T_A = 85°C			15	
			T_A = 125°C			15	
		V_{IN} = 0 or 15 V, V_{DD} = 15 V	T_A = –55°C			1	
			T_A = –40°C			1	
			T_A = 25°C		0.01	1	
			T_A = 85°C			30	
			T_A = 125°C			30	
		V_{IN} = 0 or 20 V, V_{DD} = 20 V	T_A = –55°C			5	
			T_A = –40°C			5	
			T_A = 25°C		0.02	5	
			T_A = 85°C			150	
			T_A = 125°C			150	
I_{OL}	Output low (sink) current	V_O = 0.4 V, V_{IN} = 5 V, V_{DD} = 5 V	T_A = –55°C	0.64			mA
			T_A = –40°C	0.61			
			T_A = 25°C	0.51	1		
			T_A = 85°C	0.42			
			T_A = 125°C	0.36			
		V_O = 0.5 V, V_{IN} = 10 V, V_{DD} = 10 V	T_A = –55°C	1.6			
			T_A = –40°C	1.5			
			T_A = 25°C	1.3	2.6		
			T_A = 85°C	1.1			
			T_A = 125°C	0.9			
		V_O = 1.5 V, V_{IN} = 15 V, V_{DD} = 15 V	T_A = –55°C	4.2			
			T_A = –40°C	4			
			T_A = 25°C	3.4	6.8		
			T_A = 85°C	2.8			
			T_A = 125°C	2.4			

Copyright © 1998–2019, Texas Instruments Incorporated

Electrical Characteristics – Static (continued)

T_A = 25°C; input t_r, t_f = 20 ns; C_L = 50 pF; R_L = 200 kΩ (unless otherwise noted)

PARAMETER		TEST CONDITIONS		MIN	TYP	MAX	UNIT
I_{OH}	Output high (source) current	V_O = 4.6 V, V_{IN} = 0 V, V_{DD} = 5 V	T_A = –55°C	–0.64			mA
			T_A = –40°C	–0.61			
			T_A = 25°C	–0.51	–1		
			T_A = 85°C	–0.42			
			T_A = 125°C	–0..36			
		V_O = 2.5 V, V_{IN} = 0 V, V_{DD} = 5 V	T_A = –55°C	–2			
			T_A = –40°C	–1.8			
			T_A = 25°C	–1.6	–3.2		
			T_A = 85°C	–1.3			
			T_A = 125°C	–1.15			
		V_O = 9.5 V, V_{IN} = 0 V, V_{DD} = 10 V	T_A = –55°C	–1.6			
			T_A = –40°C	–1.5			
			T_A = 25°C	–1.3	–2.6		
			T_A = 85°C	–1.1			
			T_A = 125°C	–0.9			
		V_O = 13.5 V, V_{IN} = 0 V, V_{DD} = 15 V	T_A = –55°C	–4.2			
			T_A = –40°C	–4			
			T_A = 25°C	–3.4	–6.8		
			T_A = 85°C	–2.8			
			T_A = 125°C	–2.4			
V_{OL}	Low-level output voltage	V_{IN} = 5 V, V_{DD} = 5 V	T_A = 25°C		0	0.05	V
			All other temperatures			0.05	
		V_{IN} = 10 V, V_{DD} = 10 V	T_A = 25°C		0	0.05	
			All other temperatures			0.05	
		V_{IN} = 15 V, V_{DD} = 15 V	T_A = 25°C		0	0.05	
			All other temperatures			0.05	
V_{OH}	High-level output voltage	V_{IN} = 0 V, V_{DD} = 5 V	T_A = 25°C	4.95	5		V
			All other temperatures	4.95			
		V_{IN} = 0 V, V_{DD} = 10 V	T_A = 25°C	9.95	10		
			All other temperatures	9.95			
		V_{IN} = 0 V, V_{DD} = 15 V	T_A = 25°C	14.95	15		
			All other temperatures	14.95			
V_{IL}	Input low voltage	V_O = 4.5 V, V_{DD} = 5 V, all temperatures				1	V
		V_O = 9 V, V_{DD} = 10 V, all temperatures				2	
		V_O = 13.5 V, V_{DD} = 15 V, all temperatures				2.5	
V_{IH}	Input high voltage	V_O = 0.5 V, V_{DD} = 5 V, all temperatures		4			V
		V_O = 1 V, V_{DD} = 10 V, all temperatures		8			
		V_O = 1.5 V, V_{DD} = 15 V, all temperatures		12.5			

Copyright © 1998–2019, Texas Instruments Incorporated

Electrical Characteristics – Static (continued)

T_A = 25°C; input t_r, t_f = 20 ns; C_L = 50 pF; R_L = 200 kΩ (unless otherwise noted)

PARAMETER		TEST CONDITIONS		MIN	TYP	MAX	UNIT
I_{IN}	Input current	V_{IN} = 0 V to 18 V, V_{DD} = 18 V	T_A = –55°C			±01	µA
			T_A = –40°C			±01	
			T_A = 25°C		$±10^{-5}$	±1	
			T_A = 85°C			±1	
			T_A = 125°C			±1	

Copyright © 1998–2019, Texas Instruments Incorporated

6.7 Typical Characteristics

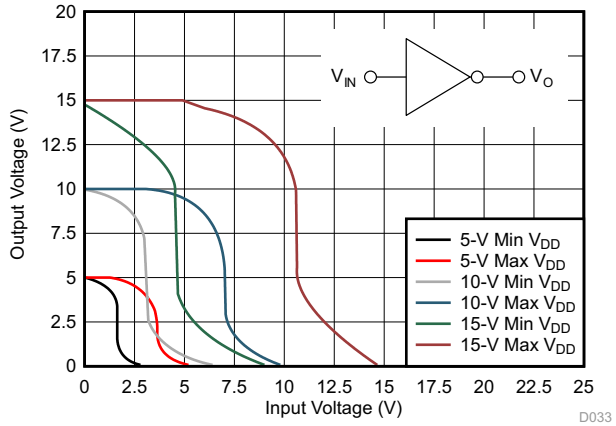

Figure 1. Minimum and Maximum Voltage Transfer Characteristics

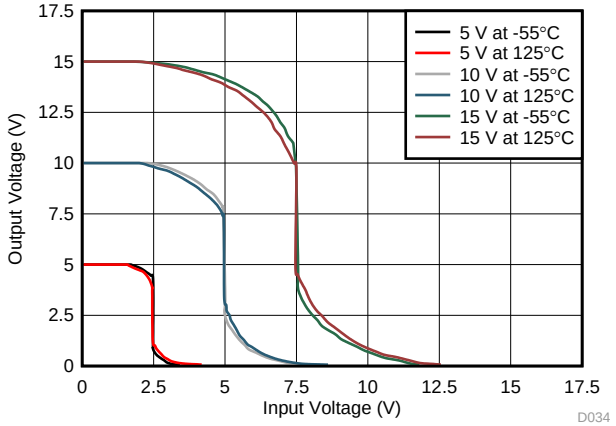

Figure 2. Typical Voltage Transfer Characteristics as a Function of Temperature

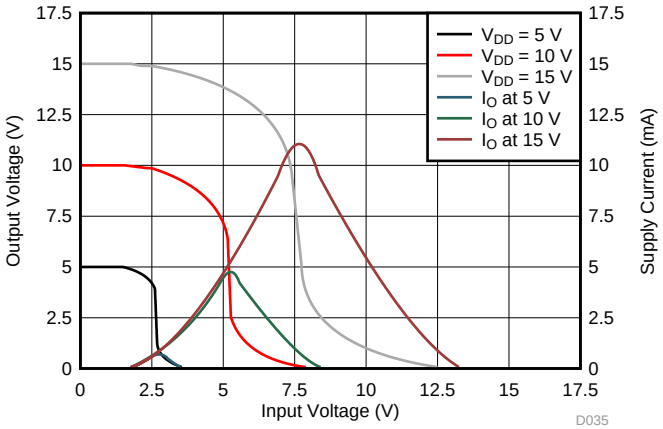

Figure 3. Typical Current and Voltage Transfer Characteristics

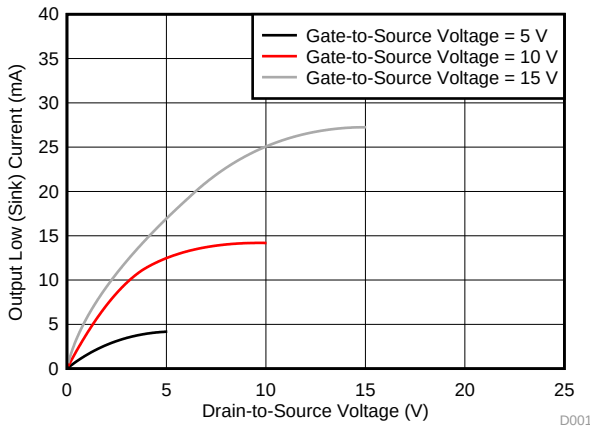

Figure 4. Typical Output Low (Sink) Current Characteristics

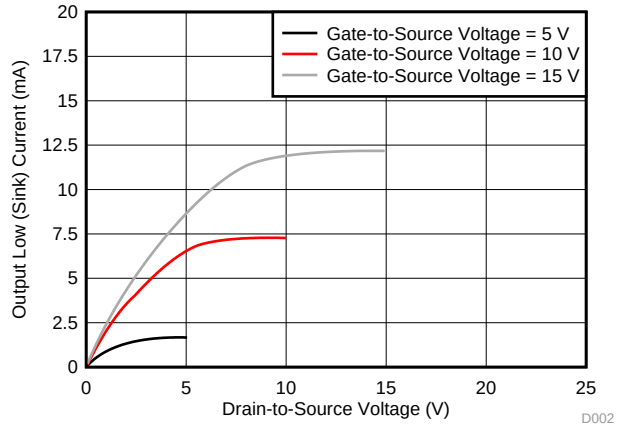

Figure 5. Minimum Output Low (Sink) Current Characteristics

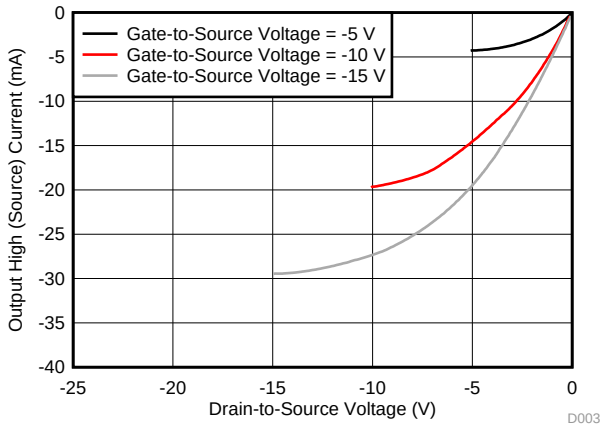

Figure 6. Typical Output High (Source) Current Characteristics

Copyright © 1998–2019, Texas Instruments Incorporated

Typical Characteristics (continued)

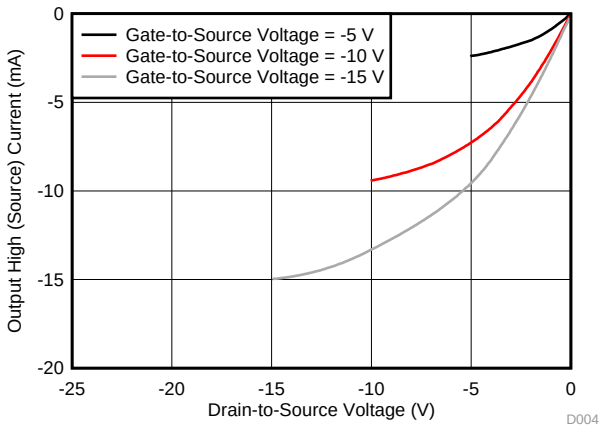

Figure 7. Minimum Output High (Source) Current Characteristics

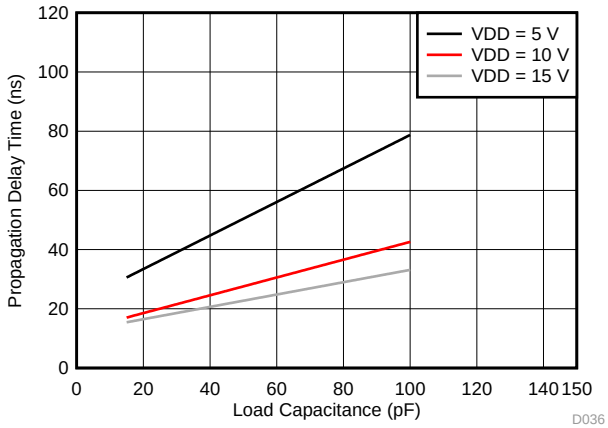

Figure 8. Typical Propagation Delay Time vs Load Capacitance

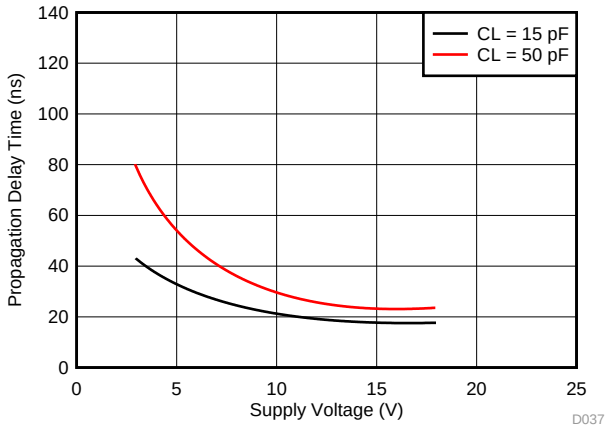

Figure 9. Typical Propagation Delay Time vs Supply Voltage

7 Parameter Measurement Information

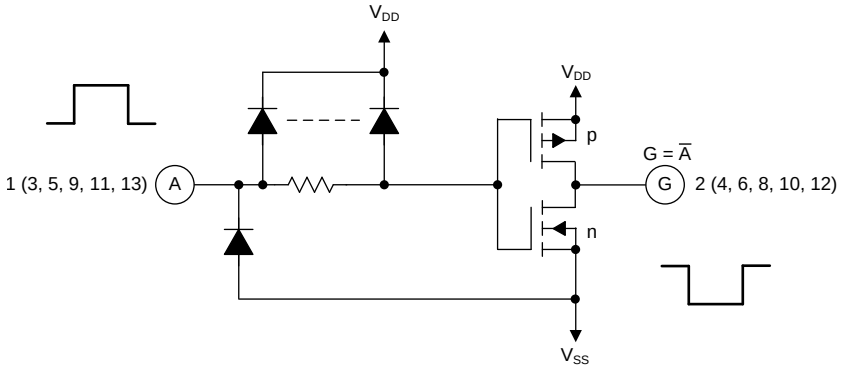

Figure 10. Schematic Diagram of One of Six Identical Inverters

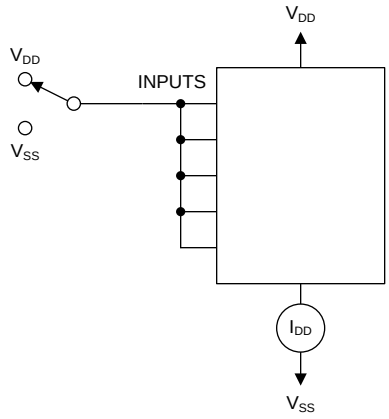

Figure 11. Quiescent Device Current Test Circuit

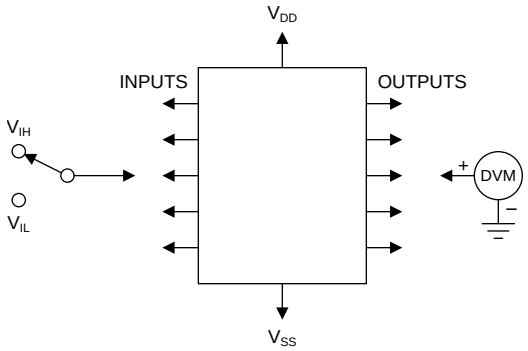

Figure 12. Noise Immunity Test Circuit

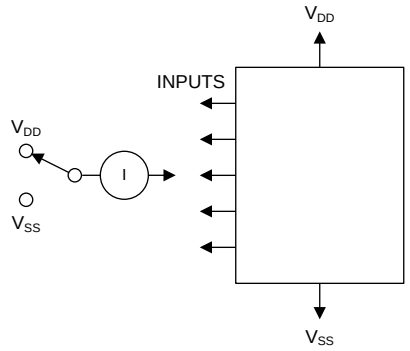

Figure 13. Input Leakage Current Test Circuit

Copyright © 1998–2019, Texas Instruments Incorporated

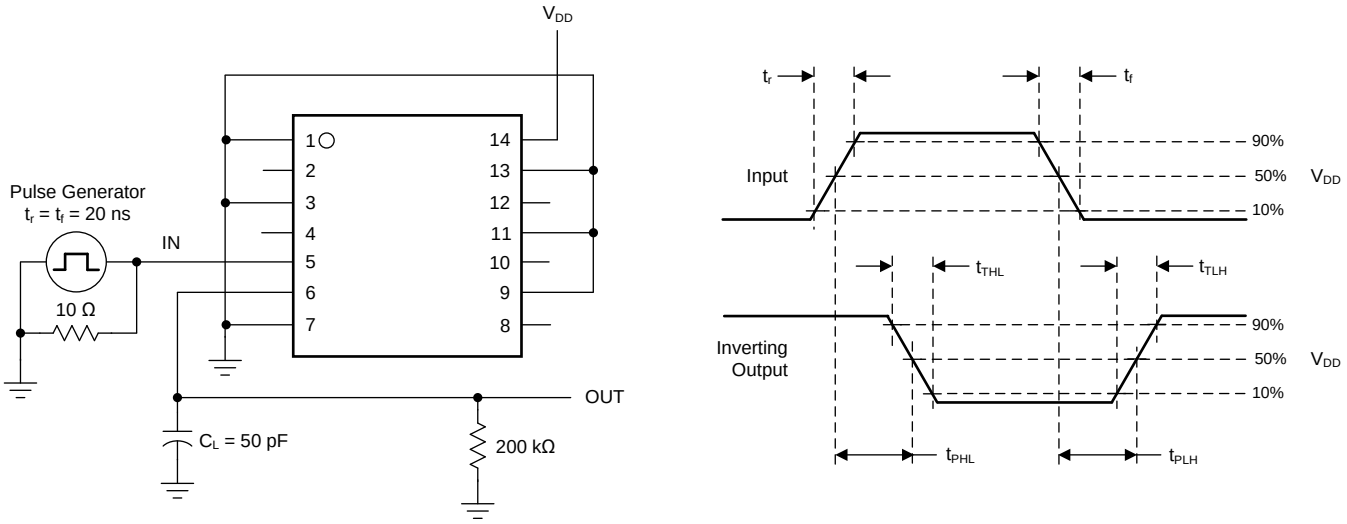

Figure 14. Dynamic Electrical Characteristics Test Circuit and Waveform

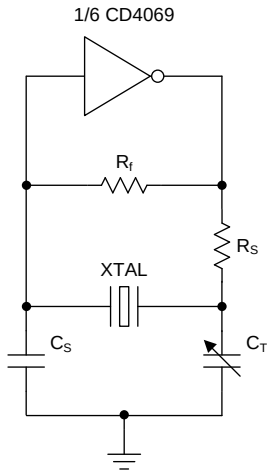

Figure 15. Typical Crystal Oscillator Circuit

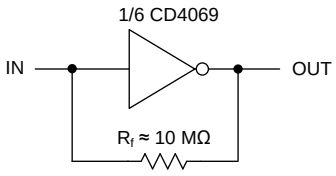

Figure 16. High-Input Impedance Amplifier

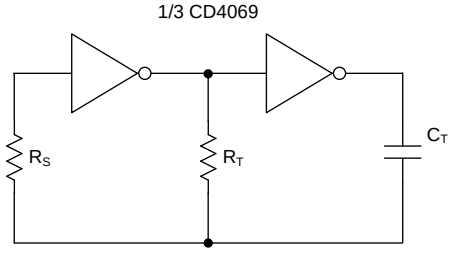

Figure 17. Typical RC Oscillator Circuit

Copyright © 1998–2019, Texas Instruments Incorporated

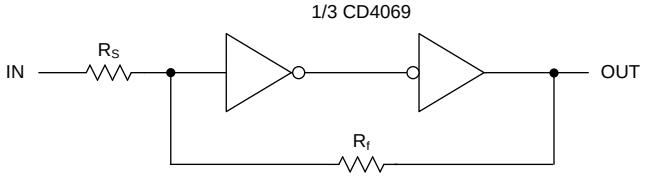

Upper Switching Point :

$$V_P = \frac{R_S + R_f}{R_f} \times \frac{V_{DD}}{2}$$

Lower Switching Point :

$$V_N = \frac{R_f - R_S}{R_f} \times \frac{V_{DD}}{2}$$

$$R_f > R_S$$

Figure 18. Input Pulse Shaping Circuit

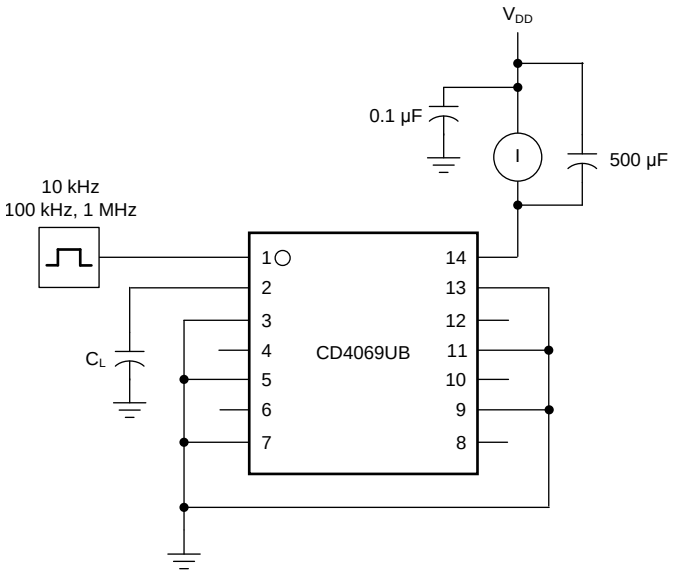

Figure 19. Dynamic Power Dissipation Test Circuit

Copyright © 1998–2019, Texas Instruments Incorporated

8 Detailed Description

8.1 Overview

The CD4069UB device has six inverter circuits. The recommended operating range is from 3 V to 18 V. The CD4069UB-series types are supplied in 14-pin hermetic dual-in-line ceramic packages (F3A suffix), 14-pin dual-in-line plastic packages (E suffix), 14-pin small-outline packages (M, MT, M96, and NSR suffixes), and 14-pin thin shrink small-outline packages (PW and PWR suffixes).

8.2 Functional Block Diagram

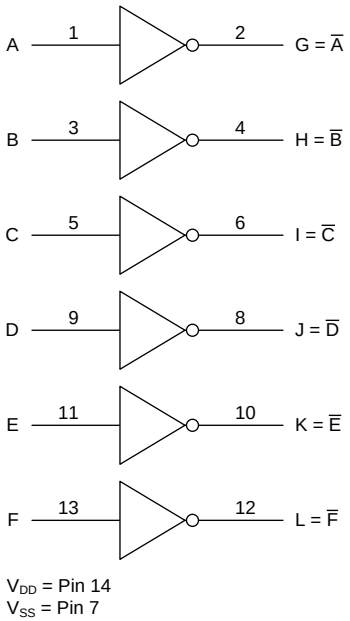

8.3 Feature Description

CD4069UB has standardized symmetrical output characteristics and a wide operating voltage range from 3 V to 18 V with quiescent current tested at 20 V. This has a medium operation speed of t_{PHL}, t_{PLH} = 30 ns (typical) at 10 V. The operating temperature is from –55°C to 125°C. CB4069B meets all requirements of JEDEC tentative standard No. 13B, *Standard Specifications for Description of B Series CMOS Devices*.

8.4 Device Functional Modes

Table 1 shows the functional modes for CD4069UB.

Table 1. Function Table

INPUT A, B, C, D, E, F	OUTPUT G, H, I, J, K, L
H	L
L	H

Copyright © 1998–2019, Texas Instruments Incorporated

9 Application and Implementation

NOTE

Information in the following applications sections is not part of the TI component specification, and TI does not warrant its accuracy or completeness. TI's customers are responsible for determining suitability of components for their purposes. Customers should validate and test their design implementation to confirm system functionality.

9.1 Application Information

The CD4069UB device has a low input current of 1 µA at 18 V over full package-temperature range and 100 nA at 18 V, 25°C. This device has a wide operating voltage range from 3 V to 18 V and used in high voltage applications.

9.2 Typical Application

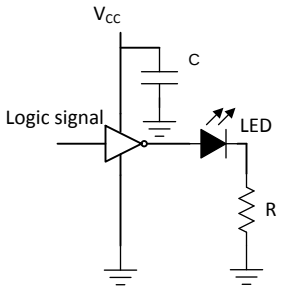

Copyright © 2016,
Texas Instruments Incorporated

Figure 20. CD4069UB Application

9.2.1 Design Requirements

The CD4069UB device is the industry's highest logic inverter operating at 18 V under recommended conditions. The lower drive capabilities makes it suitable for driving light loads like LED and greatly reduces chances of overshoots and undershoots.

9.2.2 Detailed Design Procedure

The recommended input conditions for Figure 20 includes rise time and fall time specifications (see $\Delta t/\Delta V$ in *Recommended Operating Conditions*) and specified high and low levels (see V_{IH} and V_{IL} in *Recommended Operating Conditions*). Inputs are not overvoltage tolerant and must be below V_{CC} level because of the presence of input clamp diodes to V_{CC}.

The recommended output condition for the CD4069UB application includes specific load currents. Load currents must be limited so as to not exceed the total power (continuous current through V_{CC} or GND) for the device. These limits are located in the *Absolute Maximum Ratings*. Outputs must not be pulled above V_{CC}.

Copyright © 1998–2019, Texas Instruments Incorporated

Typical Application (continued)

9.2.3 Application Curves

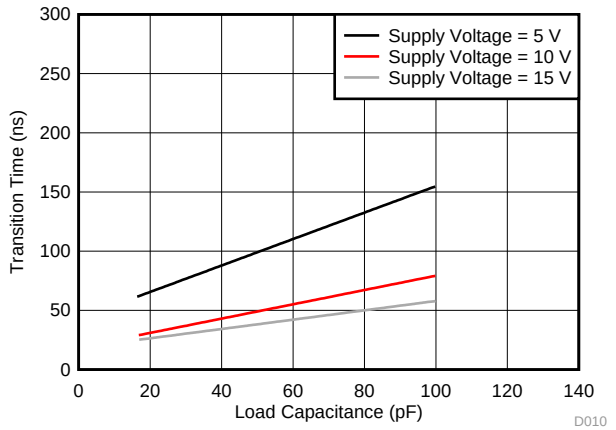

Figure 21. Typical Transition Time vs Load Capacitance

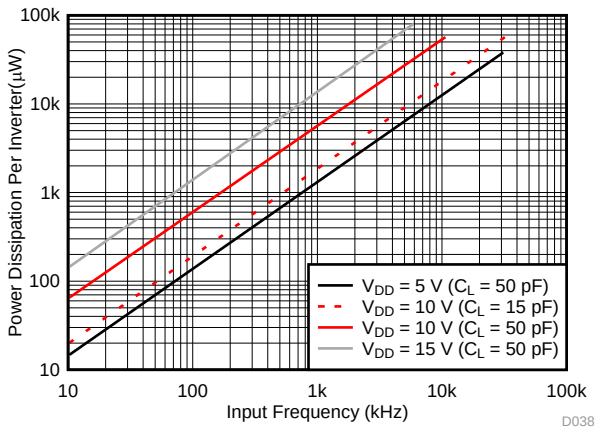

Figure 22. Typical Dynamic Power Dissipation vs Frequency

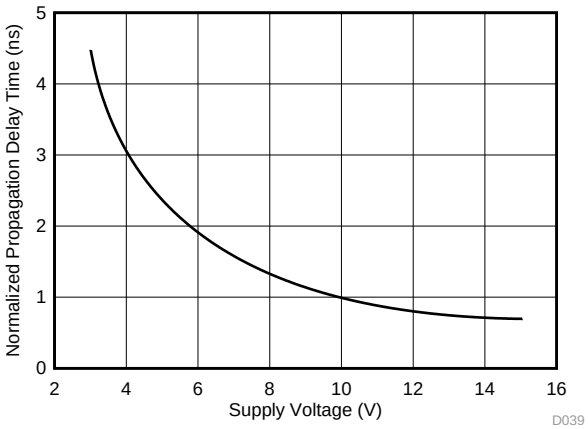

Figure 23. Variation of Normalized Propagation Delay Time (t_{PHL} and t_{PLH}) With Supply Voltage

10 Power Supply Recommendations

The power supply can be any voltage between the minimum and maximum supply voltage rating located in *Recommended Operating Conditions.*

Each V_{CC} pin must have a good bypass capacitor to prevent power disturbance. For devices with a single supply, TI recommends a 0.1-μF capacitor. If there are multiple V_{CC} pins, then TI recommends a 0.01-μF or 0.022-μF capacitor for each power pin. It is acceptable to parallel multiple bypass capacitors to reject different frequencies of noise. 0.1-μF and 1-μF capacitors are commonly used in parallel. The bypass capacitor must be installed as close to the power pin as possible for best results.

11 Layout

11.1 Layout Guidelines

When using multiple bit logic devices, inputs must never float.

In many cases, digital logic device functions or parts of these functions are unused (for example, when only two inputs of a triple-input and gate are used, or only 3 of the 4 buffer gates are used). Such input pins must not be left unconnected because the undefined voltages at the outside connections result in undefined operational states. This rule must be observed under all circumstances specified in the next paragraph.

All unused inputs of digital logic devices must be connected to a high or low bias to prevent them from floating. See the application note, *Implications of Slow or Floating CMOS Inputs* (SCBA004), for more information on the effects of floating inputs. The logic level must apply to any particular unused input depending on the function of the device. Generally, they are tied to GND or V_{CC} (whichever is convenient).

11.2 Layout Example

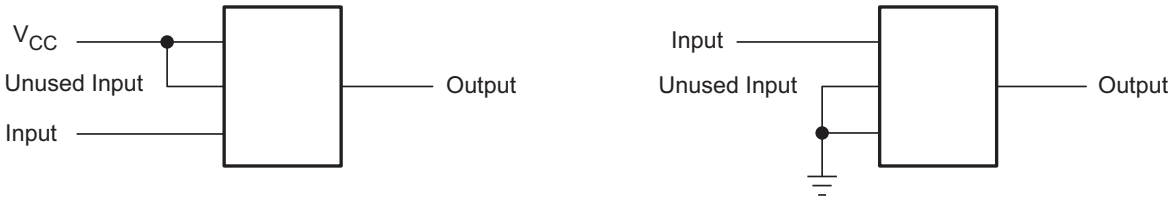

Copyright © 1998–2019, Texas Instruments Incorporated

12 Device and Documentation Support

12.1 Device Support

12.1.1 Third-Party Products Disclaimer

TI'S PUBLICATION OF INFORMATION REGARDING THIRD-PARTY PRODUCTS OR SERVICES DOES NOT CONSTITUTE AN ENDORSEMENT REGARDING THE SUITABILITY OF SUCH PRODUCTS OR SERVICES OR A WARRANTY, REPRESENTATION OR ENDORSEMENT OF SUCH PRODUCTS OR SERVICES, EITHER ALONE OR IN COMBINATION WITH ANY TI PRODUCT OR SERVICE.

12.2 Documentation Support

12.2.1 Related Documentation

For related documentation see the following:

- *Implications of Slow or Floating CMOS Inputs*, SCBA004

12.3 Community Resource

The following links connect to TI community resources. Linked contents are provided "AS IS" by the respective contributors. They do not constitute TI specifications and do not necessarily reflect TI's views; see TI's Terms of Use.

TI E2E™ Online Community ***TI's Engineer-to-Engineer (E2E) Community.*** Created to foster collaboration among engineers. At e2e.ti.com, you can ask questions, share knowledge, explore ideas and help solve problems with fellow engineers.

Design Support ***TI's Design Support*** Quickly find helpful E2E forums along with design support tools and contact information for technical support.

12.4 Trademarks

E2E is a trademark of Texas Instruments.
All other trademarks are the property of their respective owners.

12.5 Electrostatic Discharge Caution



These devices have limited built-in ESD protection. The leads should be shorted together or the device placed in conductive foam during storage or handling to prevent electrostatic damage to the MOS gates.

12.6 Glossary

SLYZ022 — *TI Glossary*.

This glossary lists and explains terms, acronyms, and definitions.

13 Mechanical, Packaging, and Orderable Information

The following pages include mechanical, packaging, and orderable information. This information is the most current data available for the designated devices. This data is subject to change without notice and revision of this document. For browser-based versions of this data sheet, refer to the left-hand navigation.

Copyright © 1998–2019, Texas Instruments Incorporated

PACKAGING INFORMATION

Orderable Device	Status (1)	Package Type	Package Drawing	Pins	Package Qty	Eco Plan (2)	Lead/Ball Finish (6)	MSL Peak Temp (3)	Op Temp (°C)	Device Marking (4/5)	Samples
CD4069UBE	ACTIVE	PDIP	N	14	25	Green (RoHS & no Sb/Br)	CU NIPDAU	N / A for Pkg Type	-55 to 125	CD4069UBE	Samples
CD4069UBEE4	ACTIVE	PDIP	N	14	25	Green (RoHS & no Sb/Br)	CU NIPDAU	N / A for Pkg Type	-55 to 125	CD4069UBE	Samples
CD4069UBF	ACTIVE	CDIP	J	14	1	TBD	A42	N / A for Pkg Type	-55 to 125	CD4069UBF	Samples
CD4069UBF3A	ACTIVE	CDIP	J	14	1	TBD	A42	N / A for Pkg Type	-55 to 125	CD4069UBF3A	Samples
CD4069UBM	ACTIVE	SOIC	D	14	50	Green (RoHS & no Sb/Br)	CU NIPDAU	Level-1-260C-UNLIM	-55 to 125	CD4069UBM	Samples
CD4069UBM96	ACTIVE	SOIC	D	14	2500	Green (RoHS & no Sb/Br)	CU NIPDAU | CU SN	Level-1-260C-UNLIM	-55 to 125	CD4069UBM	Samples
CD4069UBMT	ACTIVE	SOIC	D	14	250	Green (RoHS & no Sb/Br)	CU NIPDAU	Level-1-260C-UNLIM	-55 to 125	CD4069UBM	Samples
CD4069UBNSR	ACTIVE	SO	NS	14	2000	Green (RoHS & no Sb/Br)	CU NIPDAU	Level-1-260C-UNLIM	-55 to 125	CD4069UB	Samples
CD4069UBPW	ACTIVE	TSSOP	PW	14	90	Green (RoHS & no Sb/Br)	CU NIPDAU	Level-1-260C-UNLIM	-55 to 125	CM069UB	Samples
CD4069UBPWG4	ACTIVE	TSSOP	PW	14	90	Green (RoHS & no Sb/Br)	CU NIPDAU	Level-1-260C-UNLIM	-55 to 125	CM069UB	Samples
CD4069UBPWR	ACTIVE	TSSOP	PW	14	2000	Green (RoHS & no Sb/Br)	CU NIPDAU | CU SN	Level-1-260C-UNLIM	-55 to 125	CM069UB	Samples
JM38510/17401BCA	ACTIVE	CDIP	J	14	1	TBD	A42	N / A for Pkg Type	-55 to 125	JM38510/ 17401BCA	Samples
M38510/17401BCA	ACTIVE	CDIP	J	14	1	TBD	A42	N / A for Pkg Type	-55 to 125	JM38510/ 17401BCA	Samples

(1) The marketing status values are defined as follows:
ACTIVE: Product device recommended for new designs.
LIFEBUY: TI has announced that the device will be discontinued, and a lifetime-buy period is in effect.
NRND: Not recommended for new designs. Device is in production to support existing customers, but TI does not recommend using this part in a new design.
PREVIEW: Device has been announced but is not in production. Samples may or may not be available.
OBSOLETE: TI has discontinued the production of the device.

(2) RoHS: TI defines "RoHS" to mean semiconductor products that are compliant with the current EU RoHS requirements for all 10 RoHS substances, including the requirement that RoHS substance do not exceed 0.1% by weight in homogeneous materials. Where designed to be soldered at high temperatures, "RoHS" products are suitable for use in specified lead-free processes. TI may reference these types of products as "Pb-Free".
RoHS Exempt: TI defines "RoHS Exempt" to mean products that contain lead but are compliant with EU RoHS pursuant to a specific EU RoHS exemption.
Green: TI defines "Green" to mean the content of Chlorine (Cl) and Bromine (Br) based flame retardants meet JS709B low halogen requirements of <=1000ppm threshold. Antimony trioxide based flame retardants must also meet the <=1000ppm threshold requirement.

(3) MSL, Peak Temp. - The Moisture Sensitivity Level rating according to the JEDEC industry standard classifications, and peak solder temperature.

(4) There may be additional marking, which relates to the logo, the lot trace code information, or the environmental category on the device.

(5) Multiple Device Markings will be inside parentheses. Only one Device Marking contained in parentheses and separated by a "~" will appear on a device. If a line is indented then it is a continuation of the previous line and the two combined represent the entire Device Marking for that device.

(6) Lead/Ball Finish - Orderable Devices may have multiple material finish options. Finish options are separated by a vertical ruled line. Lead/Ball Finish values may wrap to two lines if the finish value exceeds the maximum column width.

Important Information and Disclaimer: The information provided on this page represents TI's knowledge and belief as of the date that it is provided. TI bases its knowledge and belief on information provided by third parties, and makes no representation or warranty as to the accuracy of such information. Efforts are underway to better integrate information from third parties. TI has taken and continues to take reasonable steps to provide representative and accurate information but may not have conducted destructive testing or chemical analysis on incoming materials and chemicals. TI and TI suppliers consider certain information to be proprietary, and thus CAS numbers and other limited information may not be available for release.

In no event shall TI's liability arising out of such information exceed the total purchase price of the TI part(s) at issue in this document sold by TI to Customer on an annual basis.

OTHER QUALIFIED VERSIONS OF CD4069UB, CD4069UB-MIL :

- Catalog: CD4069UB
- Military: CD4069UB-MIL

NOTE: Qualified Version Definitions:

- Catalog - TI's standard catalog product
- Military - QML certified for Military and Defense Applications

TAPE AND REEL INFORMATION

REEL DIMENSIONS

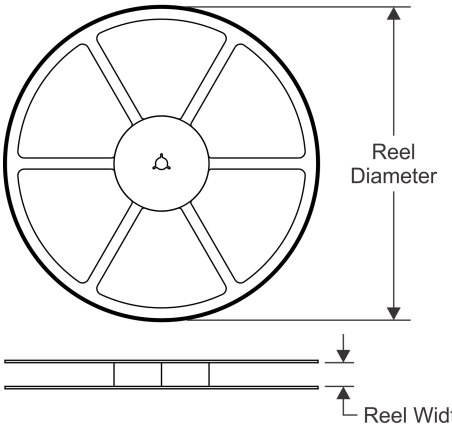

TAPE DIMENSIONS

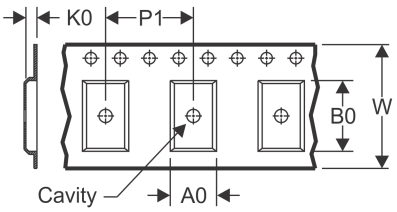

A0	Dimension designed to accommodate the component width
B0	Dimension designed to accommodate the component length
K0	Dimension designed to accommodate the component thickness
W	Overall width of the carrier tape
P1	Pitch between successive cavity centers

QUADRANT ASSIGNMENTS FOR PIN 1 ORIENTATION IN TAPE

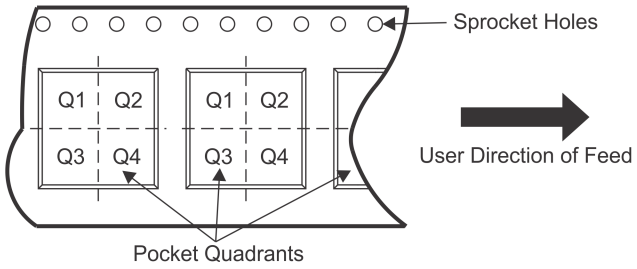

*All dimensions are nominal

Device	Package Type	Package Drawing	Pins	SPQ	Reel Diameter (mm)	Reel Width W1 (mm)	A0 (mm)	B0 (mm)	K0 (mm)	P1 (mm)	W (mm)	Pin1 Quadrant
CD4069UBM96	SOIC	D	14	2500	330.0	16.4	6.5	9.0	2.1	8.0	16.0	Q1
CD4069UBM96	SOIC	D	14	2500	330.0	16.8	6.5	9.5	2.1	8.0	16.0	Q1
CD4069UBMT	SOIC	D	14	250	330.0	16.4	6.5	9.0	2.1	8.0	16.0	Q1
CD4069UBNSR	SO	NS	14	2000	330.0	16.4	8.2	10.5	2.5	12.0	16.0	Q1
CD4069UBPWR	TSSOP	PW	14	2000	330.0	12.4	6.9	5.6	1.6	8.0	12.0	Q1
CD4069UBPWR	TSSOP	PW	14	2000	330.0	12.4	6.9	5.6	1.6	8.0	12.0	Q1

TAPE AND REEL BOX DIMENSIONS

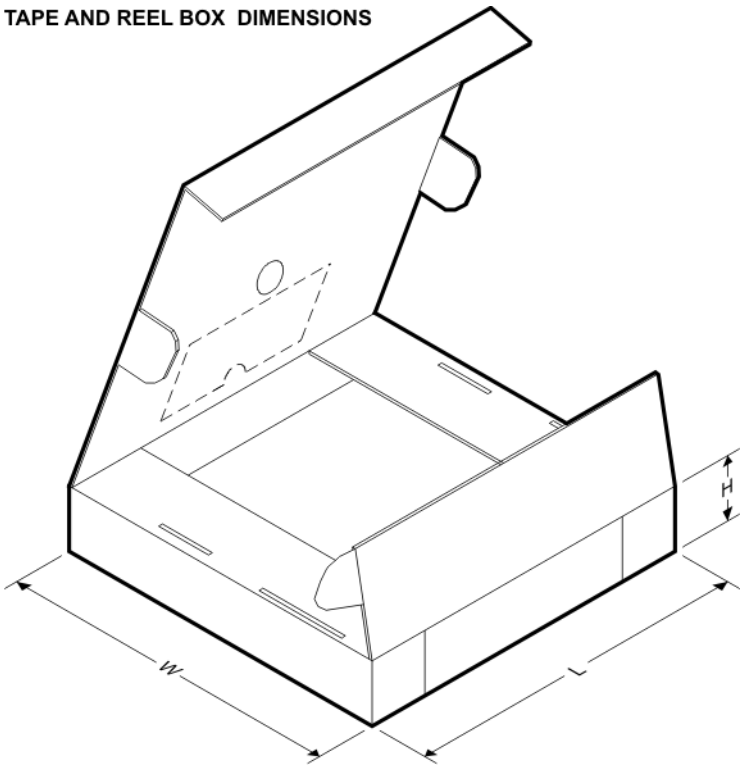

*All dimensions are nominal

Device	Package Type	Package Drawing	Pins	SPQ	Length (mm)	Width (mm)	Height (mm)
CD4069UBM96	SOIC	D	14	2500	367.0	367.0	38.0
CD4069UBM96	SOIC	D	14	2500	364.0	364.0	27.0
CD4069UBMT	SOIC	D	14	250	210.0	185.0	35.0
CD4069UBNSR	SO	NS	14	2000	367.0	367.0	38.0
CD4069UBPWR	TSSOP	PW	14	2000	367.0	367.0	35.0
CD4069UBPWR	TSSOP	PW	14	2000	364.0	364.0	27.0

MECHANICAL DATA

NS (R-PDSO-G)** **PLASTIC SMALL-OUTLINE PACKAGE**

14-PINS SHOWN

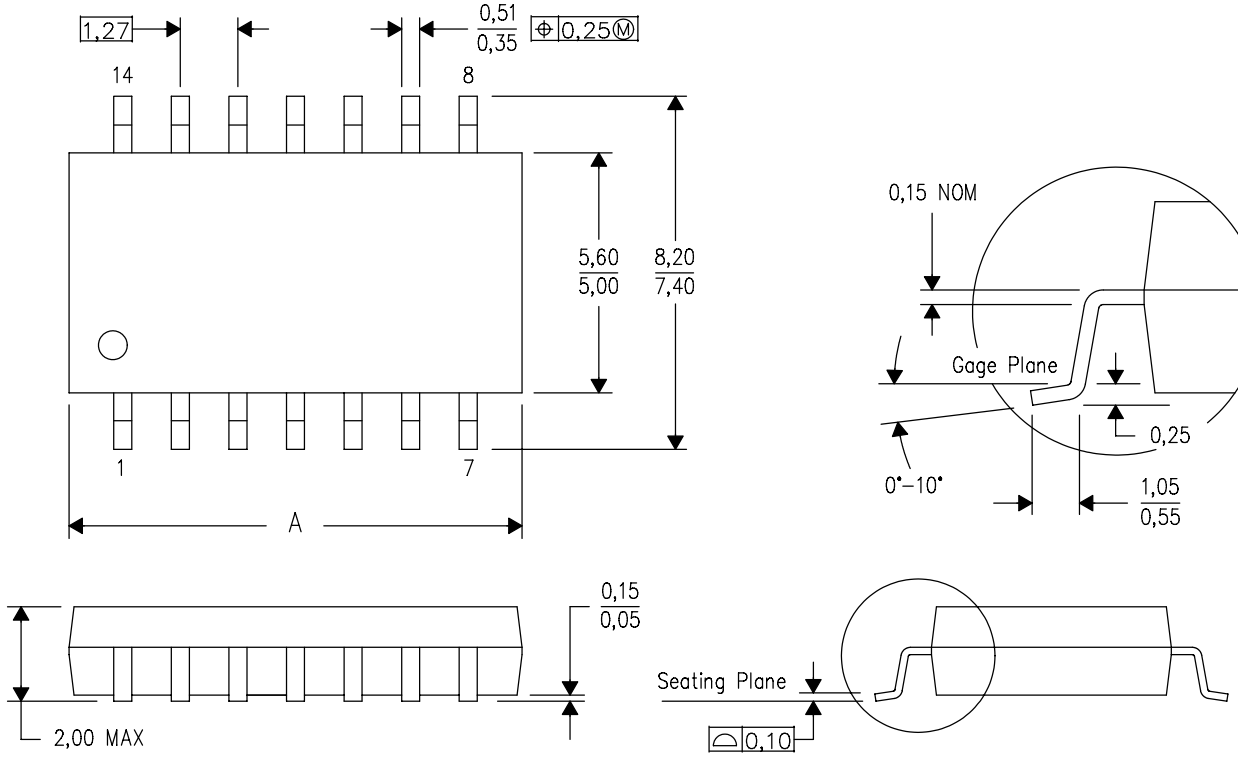

DIM \ PINS **	14	16	20	24
A MAX	10,50	10,50	12,90	15,30
A MIN	9,90	9,90	12,30	14,70

4040062/C 03/03

NOTES:
A. All linear dimensions are in millimeters.
B. This drawing is subject to change without notice.
C. Body dimensions do not include mold flash or protrusion, not to exceed 0,15.

GENERIC PACKAGE VIEW

J 14 CDIP - 5.08 mm max height

CERAMIC DUAL IN LINE PACKAGE

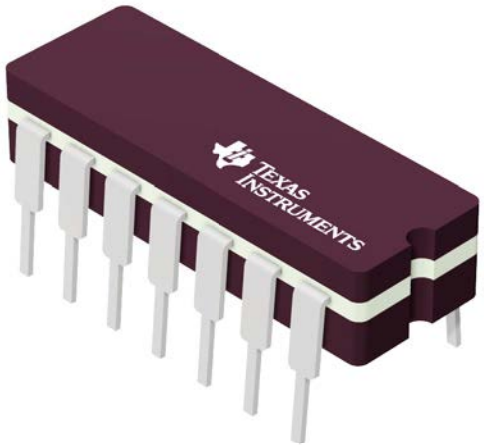

Images above are just a representation of the package family, actual package may vary.
Refer to the product data sheet for package details.

4040083-5/G



PACKAGE OUTLINE

J0014A

CDIP - 5.08 mm max height

CERAMIC DUAL IN LINE PACKAGE

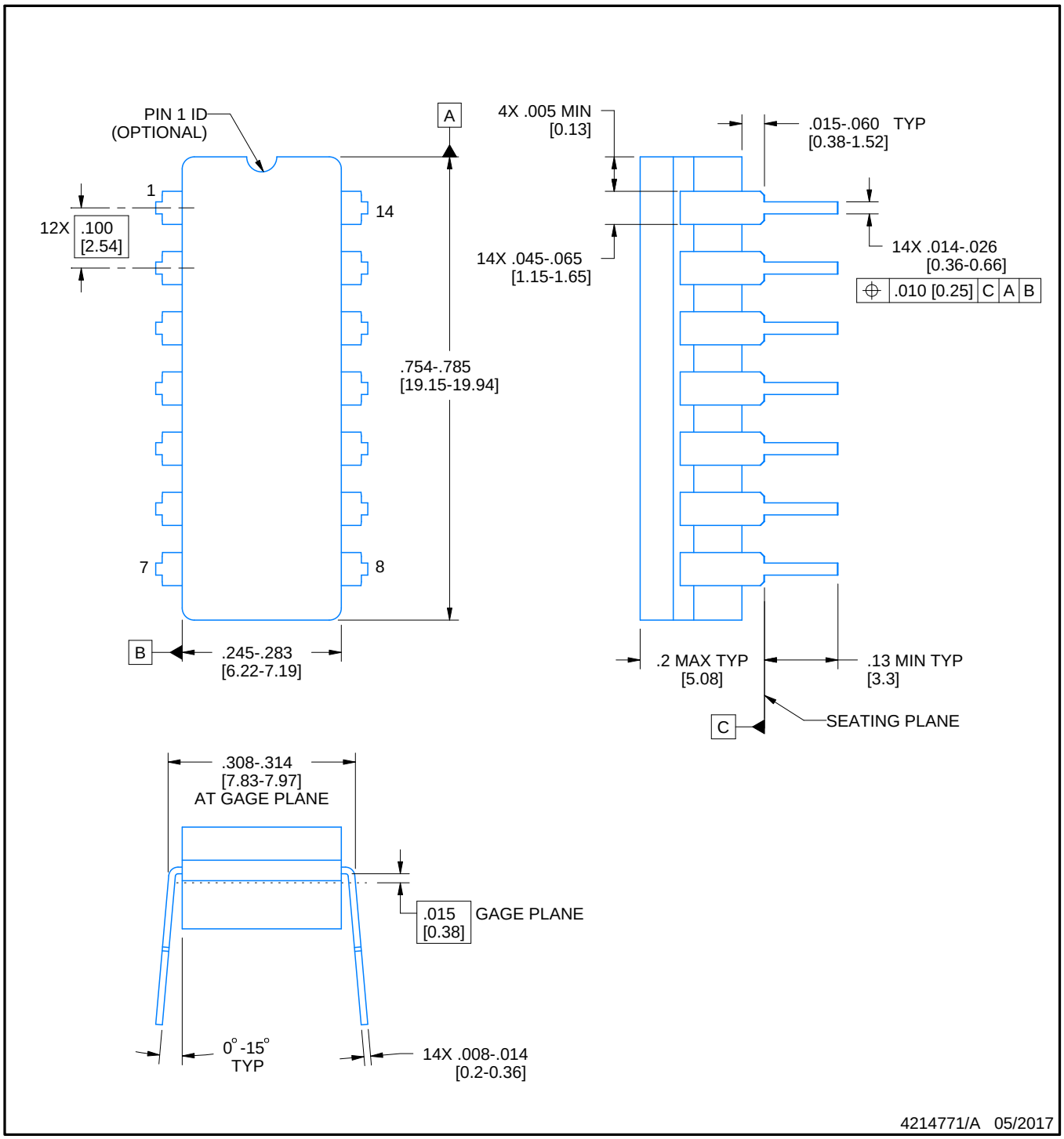

NOTES:

1. All controlling linear dimensions are in inches. Dimensions in brackets are in millimeters. Any dimension in brackets or parenthesis are for reference only. Dimensioning and tolerancing per ASME Y14.5M.
2. This drawing is subject to change without notice.
3. This package is hermitically sealed with a ceramic lid using glass frit.
4. Index point is provided on cap for terminal identification only and on press ceramic glass frit seal only.
5. Falls within MIL-STD-1835 and GDIP1-T14.

EXAMPLE BOARD LAYOUT

J0014A

CDIP - 5.08 mm max height

CERAMIC DUAL IN LINE PACKAGE

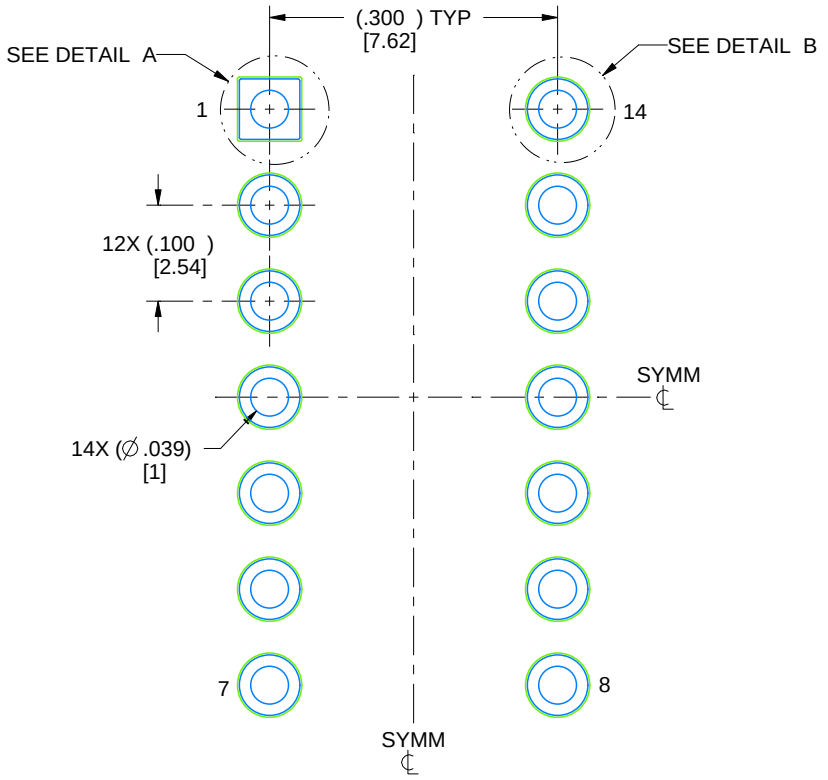

LAND PATTERN EXAMPLE
NON-SOLDER MASK DEFINED
SCALE: 5X

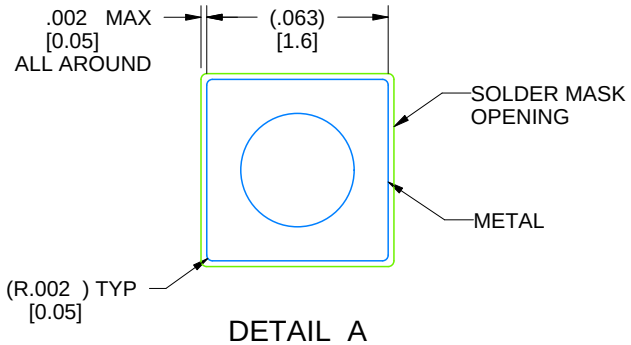

DETAIL A
SCALE: 15X

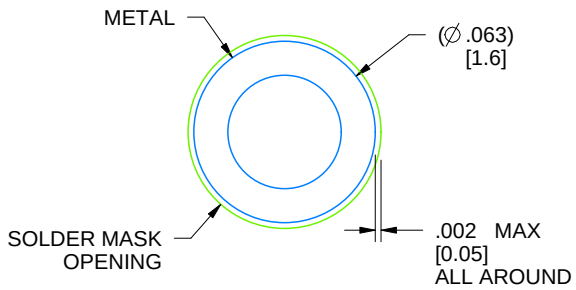

DETAIL B
13X, SCALE: 15X

4214771/A 05/2017

D (R–PDSO–G14) PLASTIC SMALL OUTLINE

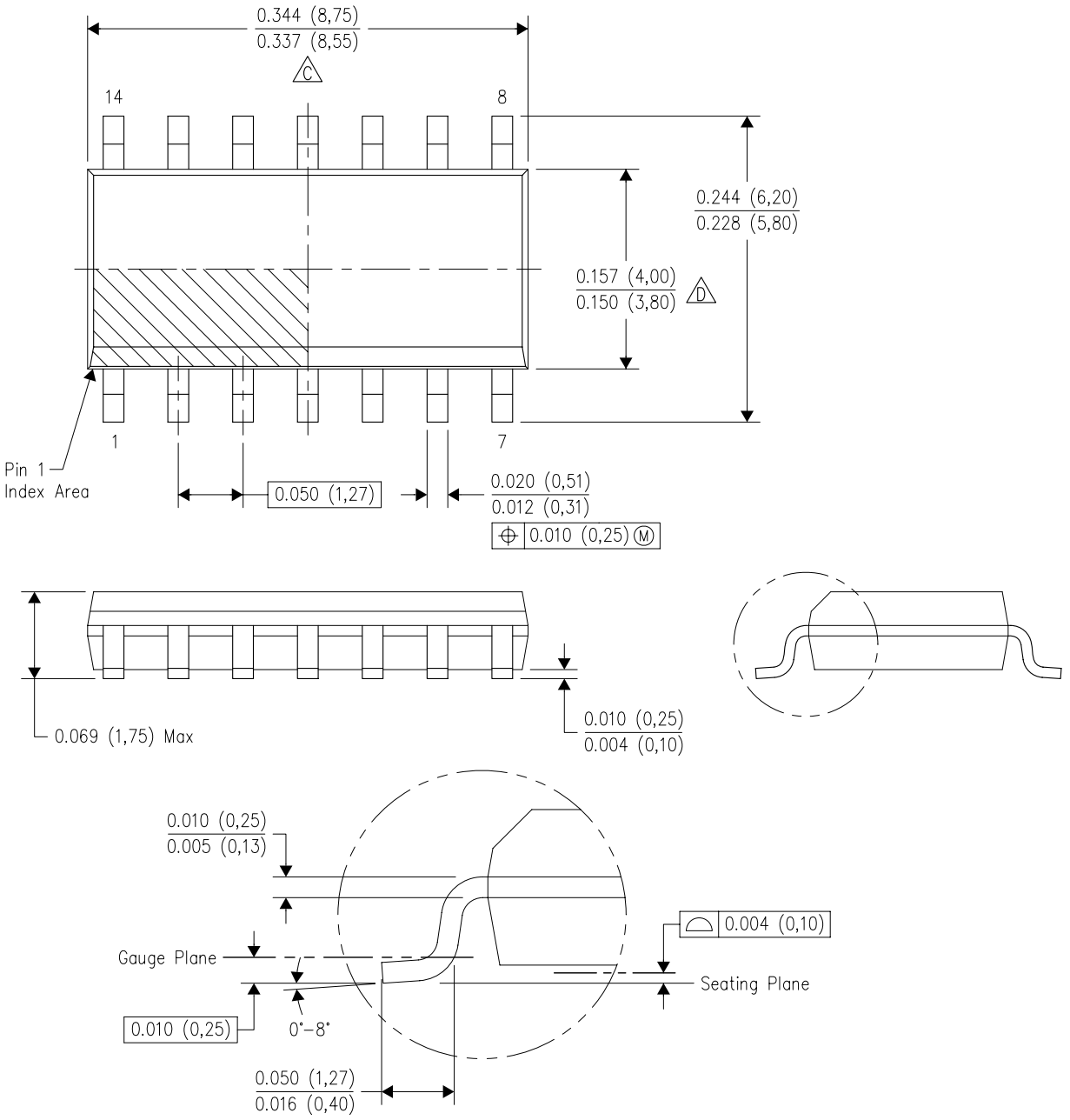

4040047–5/M 06/11

NOTES:
A. All linear dimensions are in inches (millimeters).
B. This drawing is subject to change without notice.
C. Body length does not include mold flash, protrusions, or gate burrs. Mold flash, protrusions, or gate burrs shall not exceed 0.006 (0,15) each side.
D. Body width does not include interlead flash. Interlead flash shall not exceed 0.017 (0,43) each side.
E. Reference JEDEC MS–012 variation AB.

D (R–PDSO–G14) PLASTIC SMALL OUTLINE

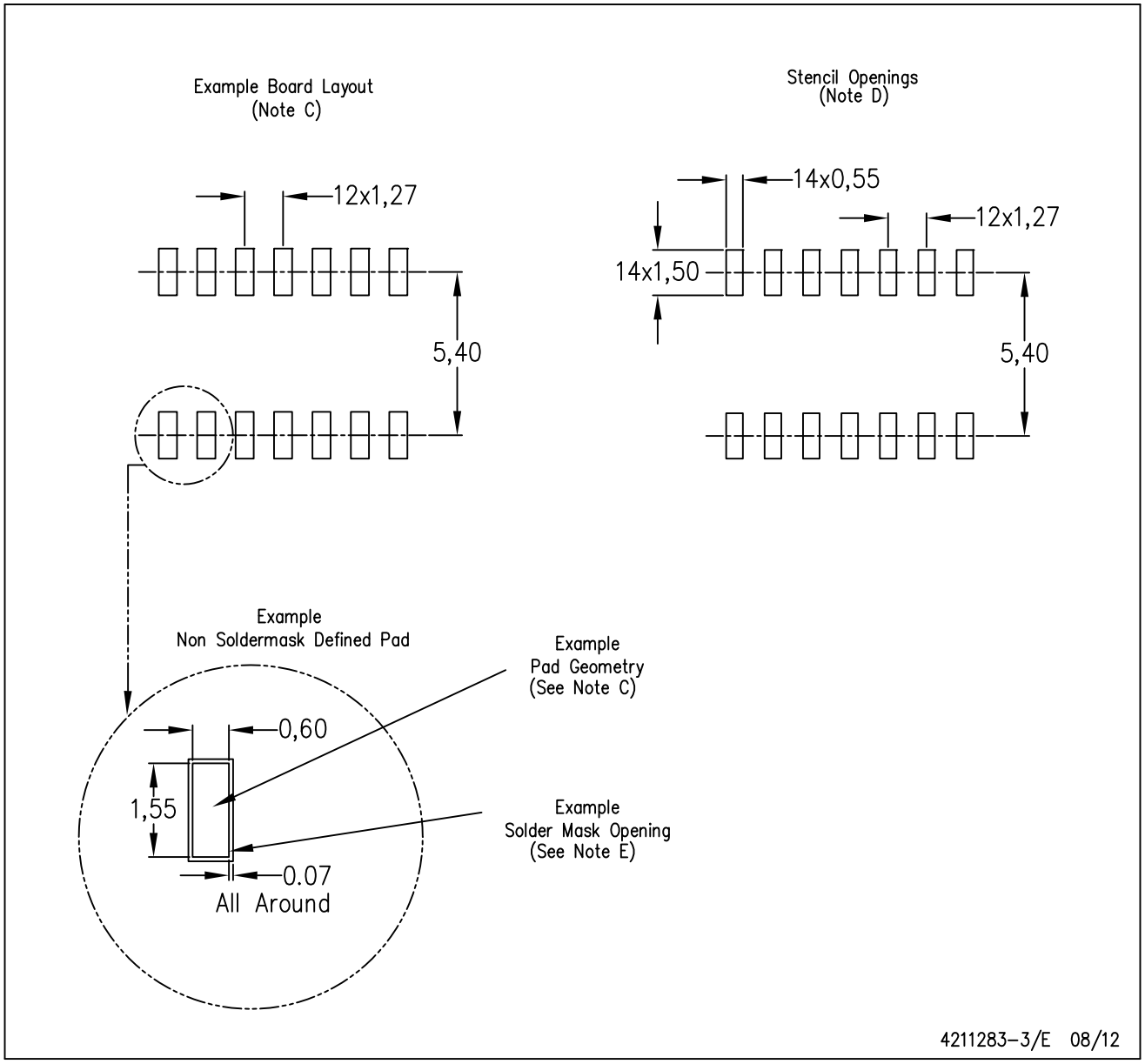

NOTES:
A. All linear dimensions are in millimeters.
B. This drawing is subject to change without notice.
C. Publication IPC–7351 is recommended for alternate designs.
D. Laser cutting apertures with trapezoidal walls and also rounding corners will offer better paste release. Customers should contact their board assembly site for stencil design recommendations. Refer to IPC–7525 for other stencil recommendations.
E. Customers should contact their board fabrication site for solder mask tolerances between and around signal pads.

PW (R–PDSO–G14) PLASTIC SMALL OUTLINE

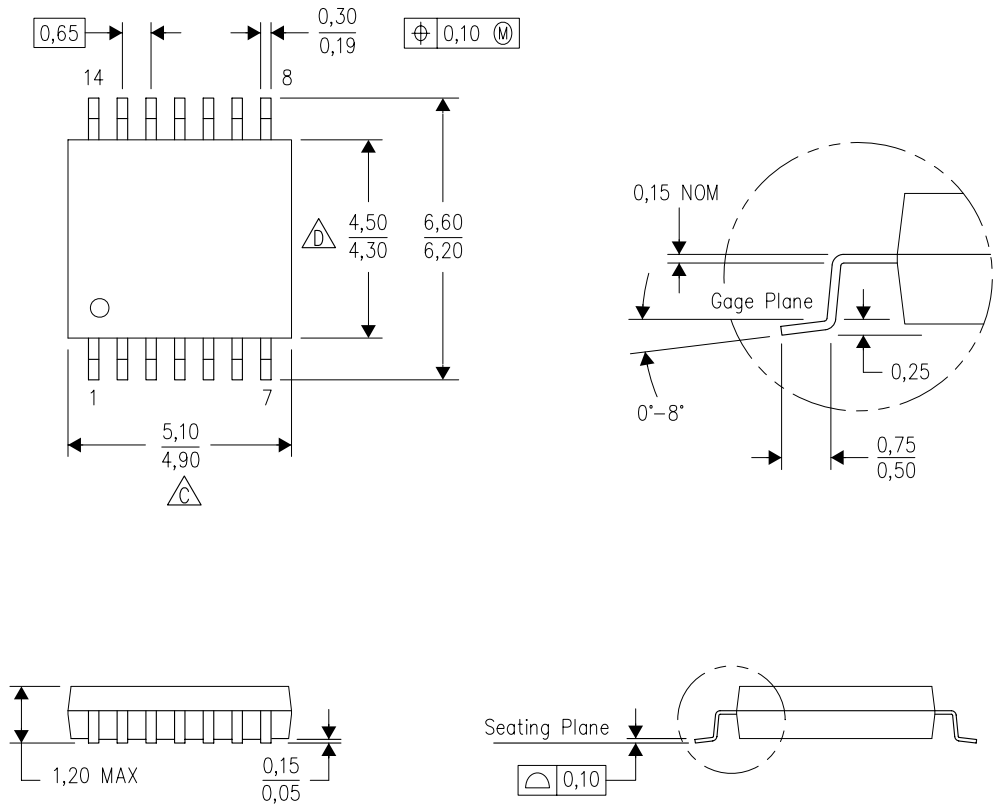

4040064–3/G 02/11

NOTES:
A. All linear dimensions are in millimeters. Dimensioning and tolerancing per ASME Y14.5M–1994.
B. This drawing is subject to change without notice.
C. Body length does not include mold flash, protrusions, or gate burrs. Mold flash, protrusions, or gate burrs shall not exceed 0,15 each side.
D. Body width does not include interlead flash. Interlead flash shall not exceed 0,25 each side.
E. Falls within JEDEC MO–153

PW (R–PDSO–G14) PLASTIC SMALL OUTLINE

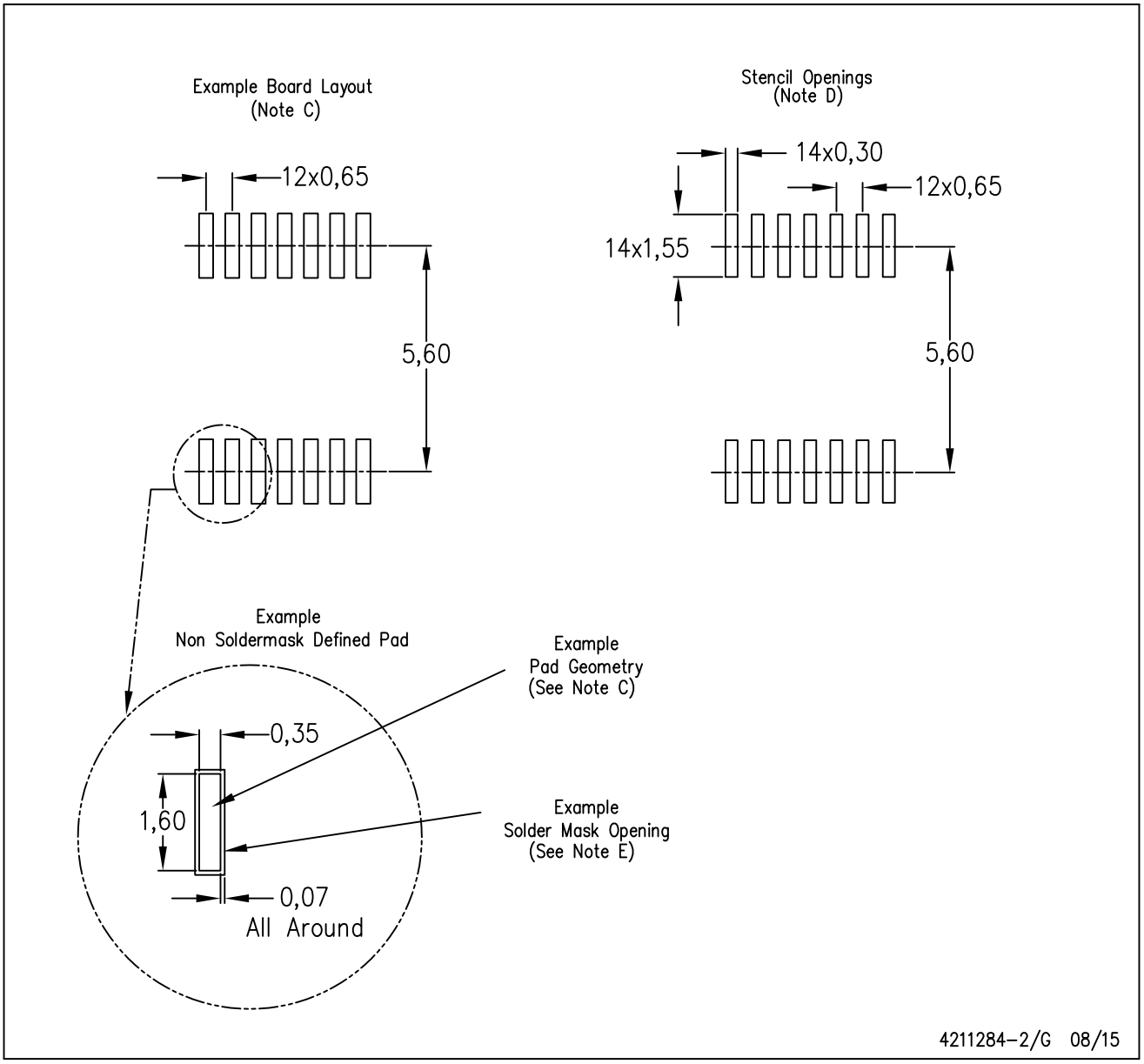

NOTES:
A. All linear dimensions are in millimeters.
B. This drawing is subject to change without notice.
C. Publication IPC–7351 is recommended for alternate designs.
D. Laser cutting apertures with trapezoidal walls and also rounding corners will offer better paste release. Customers should contact their board assembly site for stencil design recommendations. Refer to IPC–7525 for other stencil recommendations.
E. Customers should contact their board fabrication site for solder mask tolerances between and around signal pads.

N (R–PDIP–T**)

PLASTIC DUAL–IN–LINE PACKAGE

16 PINS SHOWN

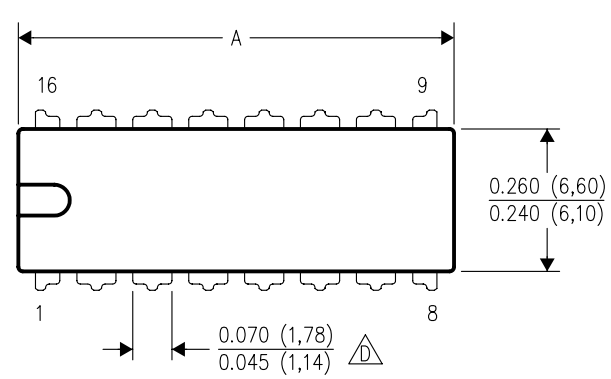

DIM \ PINS **	14	16	18	20
A MAX	0.775 (19,69)	0.775 (19,69)	0.920 (23,37)	1.060 (26,92)
A MIN	0.745 (18,92)	0.745 (18,92)	0.850 (21,59)	0.940 (23,88)
MS–001 VARIATION (C)	AA	BB	AC	AD

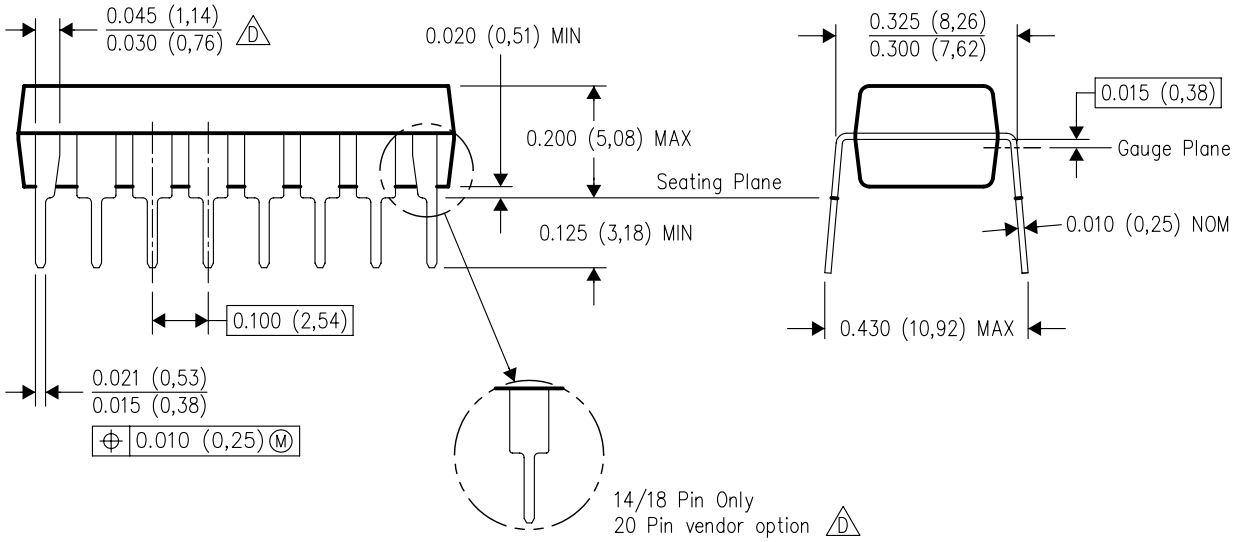

4040049/E 12/2002

NOTES:
A. All linear dimensions are in inches (millimeters).
B. This drawing is subject to change without notice.
C. Falls within JEDEC MS–001, except 18 and 20 pin minimum body length (Dim A).
D. The 20 pin end lead shoulder width is a vendor option, either half or full width.

IMPORTANT NOTICE AND DISCLAIMER

TI PROVIDES TECHNICAL AND RELIABILITY DATA (INCLUDING DATASHEETS), DESIGN RESOURCES (INCLUDING REFERENCE DESIGNS), APPLICATION OR OTHER DESIGN ADVICE, WEB TOOLS, SAFETY INFORMATION, AND OTHER RESOURCES “AS IS” AND WITH ALL FAULTS, AND DISCLAIMS ALL WARRANTIES, EXPRESS AND IMPLIED, INCLUDING WITHOUT LIMITATION ANY IMPLIED WARRANTIES OF MERCHANTABILITY, FITNESS FOR A PARTICULAR PURPOSE OR NON-INFRINGEMENT OF THIRD PARTY INTELLECTUAL PROPERTY RIGHTS.

These resources are intended for skilled developers designing with TI products. You are solely responsible for (1) selecting the appropriate TI products for your application, (2) designing, validating and testing your application, and (3) ensuring your application meets applicable standards, and any other safety, security, or other requirements. These resources are subject to change without notice. TI grants you permission to use these resources only for development of an application that uses the TI products described in the resource. Other reproduction and display of these resources is prohibited. No license is granted to any other TI intellectual property right or to any third party intellectual property right. TI disclaims responsibility for, and you will fully indemnify TI and its representatives against, any claims, damages, costs, losses, and liabilities arising out of your use of these resources.

TI’s products are provided subject to TI’s Terms of Sale (www.ti.com/legal/termsofsale.html) or other applicable terms available either on ti.com or provided in conjunction with such TI products. TI’s provision of these resources does not expand or otherwise alter TI’s applicable warranties or warranty disclaimers for TI products.

Mailing Address: Texas Instruments, Post Office Box 655303, Dallas, Texas 75265
Copyright © 2019, Texas Instruments Incorporated

Looking for pricing, stock, or lifecycle information?

Click below to explore more details on WIN SOURCE:

- View CD4069UBM96 on WIN SOURCE
- Texas Instruments Information

Optimize Your Supply Chain with WIN SOURCE Solutions

- Global Sourcing Solution
- Obsolete Management
- Cost Control Management
- Shortage Management
- Alternative Solution
- Excess Inventory Management