THE DATASHEET OF

CY29FCT818ATDMB

www.win-source.net 0086-755-83957316

- **Function, Pinout, and Drive Compatible With FCT, F Logic, and AM29818**
- **Reduced V_{OH} (Typically = 3.3 V) Version of Equivalent FCT Functions**
- **Edge-Rate Control Circuitry for Significantly Improved Noise Characteristics**
- **I_{off} Supports Partial-Power-Down Mode Operation**
- **Matched Rise and Fall Times**
- **Fully Compatible With TTL Input and Output Logic Levels**
- **8-Bit Pipeline and Shadow Register**
- **ESD Protection Exceeds JESD 22**
  - **2000-V Human-Body Model (A114-A)**
  - **200-V Machine Model (A115-A)**
  - **1000-V Charged-Device Model (C101)**
- **CY29FCT818CT**
  - **64-mA Output Sink Current**
  - **32-mA Output Source Current**
- **CY29FCT818ATDMB**
  - **20-mA Output Sink Current**
  - **3-mA Output Source Current**
- **3-State Outputs**

D, P, Q, OR SO PACKAGE
(TOP VIEW)

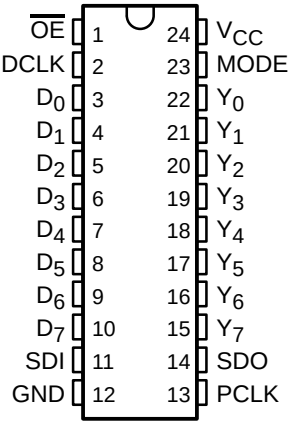

description

The CY29FCT818T contains a high-speed 8-bit general-purpose data pipeline register and a high-speed 8-bit shadow register. The general-purpose register can be used in an 8-bit-wide data path for a normal system application. The shadow register is designed for applications such as diagnostics in sequential circuits, where it is desirable to load known data at a specific location in the circuit and to read the data at that location.

The shadow register can load data from the output of the device, and can be used as a right-shift register with bit-serial input (SDI) and output (SDO), using DCLK. The data register input is multiplexed to enable loading from the shadow register or from the data input pins, using PCLK. Data can be loaded simultaneously from the shadow register to the pipeline register, and from the pipeline register to the shadow register, provided setup-time and hold-time requirements are satisfied, with respect to the two independent clock inputs.

In a typical application, the general-purpose register in this device replaces an 8-bit data register in the normal data path of a system. The shadow register is placed in an auxiliary bit-serial loop that is used for diagnostics. During diagnostic operation, data is shifted serially into the shadow register, then transferred to the general-purpose register to load a known value into the data path. To read the contents at that point in the data path, the data is transferred from the data register into the shadow register, then shifted serially in the auxiliary diagnostic loop to make it accessible to the diagnostics controller. This data then is compared with the expected value to diagnose faulty operation of the sequential circuit.

This device is fully specified for partial-power-down applications using I_{off}. The I_{off} circuitry disables the outputs, preventing damaging current backflow through the device when it is powered down.



Please be aware that an important notice concerning availability, standard warranty, and use in critical applications of Texas Instruments semiconductor products and disclaimers thereto appears at the end of this data sheet.

PRODUCTION DATA information is current as of publication date. Products conform to specifications per the terms of Texas Instruments standard warranty. Production processing does not necessarily include testing of all parameters.

Copyright © 2001, Texas Instruments Incorporated

On products compliant to MIL-PRF-38535, all parameters are tested unless otherwise noted. On all other products, production processing does not necessarily include testing of all parameters.

ORDERING INFORMATION

T_A	PACKAGE†		SPEED (ns)	ORDERABLE PART NUMBER	TOP-SIDE MARKING
–40°C to 85°C	DIP – P	Tube	6	CY29FCT818CTPC	CY29FCT818CTPC
	QSOP – Q	Tape and reel	6	CY29FCT818CTQCT	29FCT818C
	SOIC – SO	Tube	6	CY29FCT818CTSOC	29FCT818C
		Tape and reel	6	CY29FCT818CTSOCT	
–55°C to 125°C	CDIP – D	Tube	12	CY29FCT818ATDMB	

† Package drawings, standard packing quantities, thermal data, symbolization, and PCB design guidelines are available at www.ti.com/sc/package.

FUNCTION TABLE

INPUTS				OUTPUT SDO	SHADOW REGISTER	PIPELINE REGISTER	OPERATION
MODE	SDI	DCLK	PCLK				
L	X	↑	X	S_7	$S_0 \leftarrow SDI$ $S_i \leftarrow S_{i-1}$	NA	Serial shift; D_7–D_0 output disabled
L	X	X	↑	S_7	NA	$P_i \leftarrow D_i$	Load pipeline register from data input
H	L	↑	X	L	$S_i \leftarrow Y_i$	NA	Load shadow register from Y output
H	H	↑	X	H	Hold	NA	Hold shadow register; D_7–D_0 output enabled
H	X	X	↑	SDI	NA	$P_i \leftarrow S_i$	Load pipeline register from shadow register

H = High logic level, L = Low logic level, X = Don't care, ↑ Low-to-high transition, ← = Transfer direction, NA = Not applicable

logic diagram

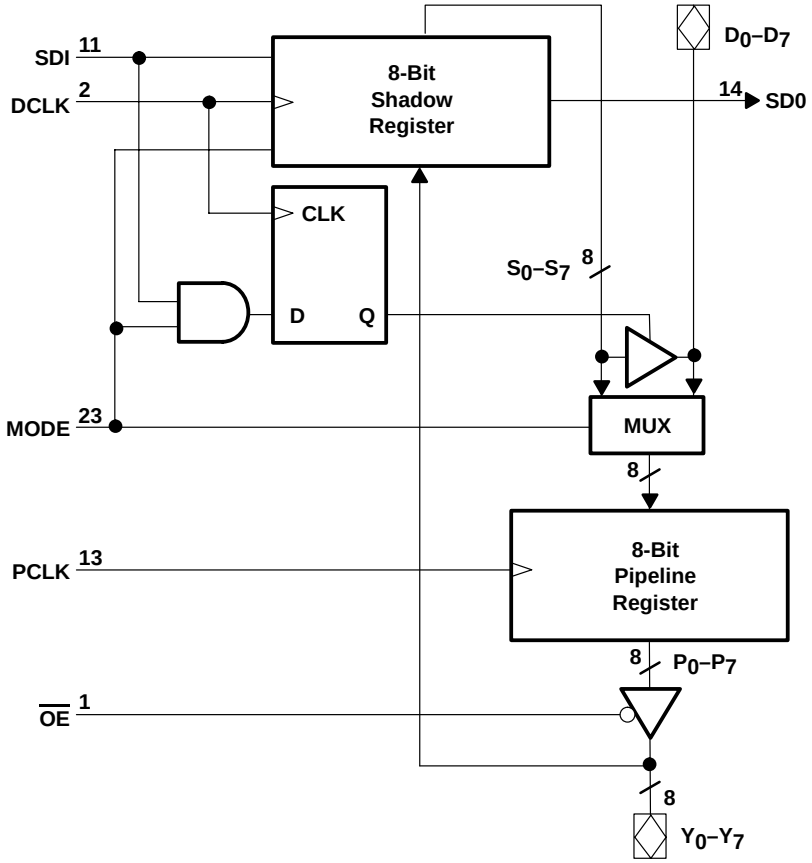

absolute maximum rating over operating free-air temperature range (unless otherwise noted)†

Supply voltage range to ground potential	–0.5 V to 7 V
DC input voltage range	–0.5 V to 7 V
DC output voltage range	–0.5 V to 7 V
DC output current (maximum sink current/pin)	120 mA
Package thermal impedance, θ_{JA} (see Note 1): P package	67°C/W
(see Note 2): Q package	61°C/W
(see Note 2): SO package	46°C/W
Ambient temperature range with power applied, T_A	–65°C to 135°C
Storage temperature range, T_{stg}	–65°C to 150°C

† Stresses beyond those listed under “absolute maximum ratings” may cause permanent damage to the device. These are stress ratings only, and functional operation of the device at these or any other conditions beyond those indicated under “recommended operating conditions” is not implied. Exposure to absolute-maximum-rated conditions for extended periods may affect device reliability.

NOTES: 1. The package thermal impedance is calculated in accordance with JESD 51-3.
2. The package thermal impedance is calculated in accordance with JESD 51-7.

recommended operating conditions (see Note 3)

		CY29FCT818ATDMB			CY29FCT818T			UNIT
		MIN	NOM	MAX	MIN	NOM	MAX	
V_{CC}	Supply voltage	4.5	5	5.5	4.75	5	5.25	V
V_{IH}	High-level input voltage	2			2			V
V_{IL}	Low-level input voltage			0.8			0.8	V
I_{OH}	High-level output current			–3			–32	mA
I_{OL}	Low-level output current			20			64	mA
T_A	Operating free-air temperature	–55		125	–40		85	°C

NOTE 3: All unused inputs of the device must be held at V_{CC} or GND to ensure proper device operation.

electrical characteristics over recommended operating free-air temperature range (unless otherwise noted)

PARAMETER	TEST CONDITIONS		CY29FCT818ATDMB			CY29FCT818T			UNIT
			MIN	TYP†	MAX	MIN	TYP†	MAX	
V_{IK}	V_{CC} = 4.5 V,	I_{IN} = –18 mA		–0.7	–1.2				V
	V_{CC} = 4.75 V,	I_{IN} = –18 mA					–0.7	–1.2	
V_{OH}	V_{CC} = 4.5 V,	I_{OH} = –3 mA	2.4	3.3					V
	V_{CC} = 4.75 V	I_{OH} = –32 mA				2			
		I_{OH} = –15 mA				2.4	3.3		
V_{OL}	V_{CC} = 4.5 V,	I_{OL} = 20 mA		0.3	0.55				V
	V_{CC} = 4.75 V,	I_{OL} = 64 mA					0.3	0.55	
V_{hys}	All inputs			0.2			0.2		V
I_I	V_{CC} = 5.5 V,	V_{IN} = V_{CC}			5				µA
	V_{CC} = 5.25 V,	V_{IN} = V_{CC}						5	
I_{IH}	V_{CC} = 5.5 V,	V_{IN} = 2.7 V			±1				µA
	V_{CC} = 5.25 V,	V_{IN} = 2.7 V						±1	
I_{IL}	V_{CC} = 5.5 V,	V_{IN} = 0.5 V			±1				µA
	V_{CC} = 5.25 V,	V_{IN} = 0.5 V						±1	
I_{OZH}	V_{CC} = 5.5 V,	V_{OUT} = 2.7 V			10				µA
	V_{CC} = 5.25 V,	V_{OUT} = 2.7 V						10	
I_{OZL}	V_{CC} = 5.5 V,	V_{OUT} = 0.5 V			–10				µA
	V_{CC} = 5.25 V,	V_{OUT} = 0.5 V						–10	
I_{OS}‡	V_{CC} = 5.5 V,	V_{OUT} = 0 V	–60	–120	–225				mA
	V_{CC} = 5.25 V,	V_{OUT} = 0 V				–60	–120	–225	
I_{off}	V_{CC} = 0 V,	V_{OUT} = 4.5 V			±1			±1	µA
I_{CC}	V_{CC} = 5.5 V,	V_{IN} ≤ 0.2 V, V_{IN} ≥ V_{CC} – 0.2 V		0.2	1.5				mA
	V_{CC} = 5.25 V,	V_{IN} ≤ 0.2 V, V_{IN} ≥ V_{CC} – 0.2 V					0.2	1.5	
ΔI_{CC}	V_{CC} = 5.5 V, V_{IN} = 3.4 V§, f_1 = 0, Outputs open			0.5	2				mA
	V_{CC} = 5.25 V, V_{IN} = 3.4 V§, f_1 = 0, Outputs open						0.5	2	

† Typical values are at V_{CC} = 5 V, T_A = 25°C.
‡ Not more than one output should be shorted at a time. Duration of short should not exceed one second. The use of high-speed test apparatus and/or sample-and-hold techniques are preferable to minimize internal chip heating and more accurately reflect operational values. Otherwise, prolonged shorting of a high output can raise the chip temperature well above normal and cause invalid readings in other parametric tests. In any sequence of parameter tests, I_{OS} tests should be performed last.
§ Per TTL-driven input (V_{IN} = 3.4 V); all other inputs at V_{CC} or GND

electrical characteristics over recommended operating free-air temperature range (unless otherwise noted) (continued)

PARAMETER	TEST CONDITIONS			CY29FCT818ATDMB			CY29FCT818T			UNIT
				MIN	TYP†	MAX	MIN	TYP†	MAX	
I_{CCD}¶	V_{CC} = 5.5 V, Outputs open, One input switching at 50% duty cycle, $\overline{OE}$ = GND, $V_{IN} \le 0.2$ V or $V_{IN} \ge V_{CC} - 0.2$ V					0.25				mA/ MHz
	V_{CC} = 5.25 V, Outputs open, One input switching at 50% duty cycle, $\overline{OE}$ = GND, $V_{IN} \le 0.2$ V or $V_{IN} \ge V_{CC} - 0.2$ V								0.25	
I_C#	V_{CC} = 5.5 V, Outputs open, f_0 = 10 MHz, $\overline{OE}$ = GND	One bit switching at f_1 = 5 MHz at 50% duty cycle	$V_{IN} \le 0.2$ V or $V_{IN} \ge V_{CC} - 0.2$ V			5.3				mA
			V_{IN} = 3.4 V or GND			7.3				
		Eight bits and four controls switching at f_1 = 5 MHz at 50% duty cycle	$V_{IN} \le 0.2$ V or $V_{IN} \ge V_{CC} - 0.2$ V			17.8‖				
			V_{IN} = 3.4 V or GND			30.8‖				
	V_{CC} = 5.25 V, Outputs open, f_0 = 10 MHz, $\overline{OE}$ = GND	One bit switching at f_1 = 5 MHz at 50% duty cycle	$V_{IN} \le 0.2$ V or $V_{IN} \ge V_{CC} - 0.2$ V						5.3	
			V_{IN} = 3.4 V or GND						7.3	
		Eight bits and four controls switching at f_1 = 5 MHz at 50% duty cycle	$V_{IN} \le 0.2$ V or $V_{IN} \ge V_{CC} - 0.2$ V						17.8‖	
			V_{IN} = 3.4 V or GND						30.8‖	
C_i					5	10		5	10	pF
C_o					9	12		9	12	pF

† Typical values are at V_{CC} = 5 V, T_A = 25°C.
¶ This parameter is derived for use in total power-supply calculations.
# $I_C = I_{CC} + \Delta I_{CC} \times D_H \times N_T + I_{CCD} (f_0/2 + f_1 \times N_1)$
Where:
I_C = Total supply current
I_{CC} = Power-supply current with CMOS input levels
ΔI_{CC} = Power-supply current for a TTL high input (V_{IN} = 3.4 V)
D_H = Duty cycle for TTL inputs high
N_T = Number of TTL inputs at D_H
I_{CCD} = Dynamic current caused by an input transition pair (HLH or LHL)
f_0 = Clock frequency for registered devices, otherwise zero
f_1 = Input signal frequency
N_1 = Number of inputs changing at f_1
All currents are in milliamperes and all frequencies are in megahertz.
‖ Values for these conditions are examples of the I_{CC} formula.

timing requirements over recommended operating free-air temperature range (unless otherwise noted) (see Figure 1)

PARAMETER			CY29FCT818AT		CY29FCT818CT		UNIT
			MIN	MAX	MIN	MAX	
t_w	Pulse width	PCLK high and low	15		5		ns
		DCLK high and low	25		5		
t_{su}	Setup time	D before PCLK↑	6		2		ns
		MODE before PCLK↑	15		3.5		
		Y before DCLK↑	5		2		
		MODE before DCLK↑	12		3.5		
		SDI before DCLK↑	10		3.5		
		DCLK before PCLK↑	15		3.5		
		PCLK before DCLK↑	45		8.5		
t_h	Hold time	D after PCLK↑	2		1.5		ns
		MODE after PCLK↑	0		0		
		Y after DCLK↑	5		1.5		
		MODE after DCLK↑	5		1.5		
		SDI after DCLK↑	0		0		

switching characteristics over operating free-air temperature range (see Figure 1)

PARAMETER	FROM (INPUT)	TO (OUTPUT)	CY29FCT818AT		CY29FCT818CT		UNIT
			MIN	MAX	MIN	MAX	
t_{pd}	PCLK	Y		12		6	ns
	MODE	SDO		18		7.2	
	SDI	SDO		18		7.1	
	DCLK	SDO		30		7.2	
t_{PZL}	$\overline{OE}$	Y		20		8	ns
	DCLK	D		35		9	
t_{PZH}	$\overline{OE}$	Y		20		8.5	ns
	DCLK	D		30		9	
t_{PLZ}	$\overline{OE}$	Y		20		5.5	ns
	DCLK	D		45		5.5	
t_{PHZ}	$\overline{OE}$	Y		30		8	ns
	DCLK	D		90		8	

PARAMETER MEASUREMENT INFORMATION

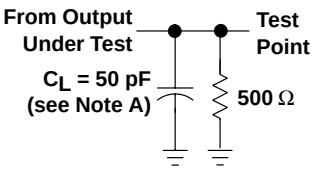

LOAD CIRCUIT FOR
TOTEM-POLE OUTPUTS

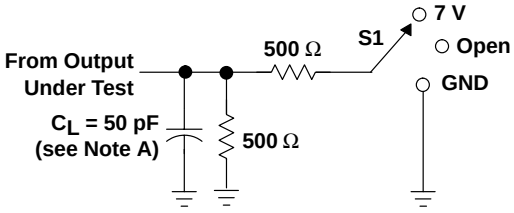

LOAD CIRCUIT FOR
3-STATE OUTPUTS

TEST	S1
t_{PLH}/t_{PHL}	Open
t_{PLZ}/t_{PZL}	7 V
t_{PHZ}/t_{PZH}	Open

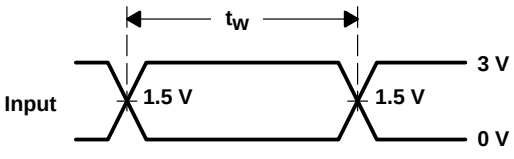

VOLTAGE WAVEFORMS
PULSE DURATION

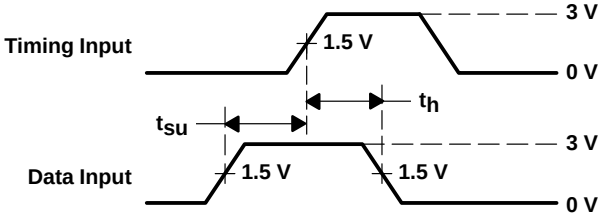

VOLTAGE WAVEFORMS
SETUP AND HOLD TIMES

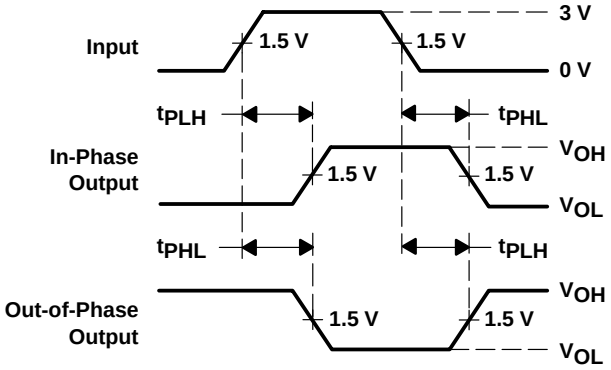

VOLTAGE WAVEFORMS
PROPAGATION DELAY TIMES
INVERTING AND NONINVERTING OUTPUTS

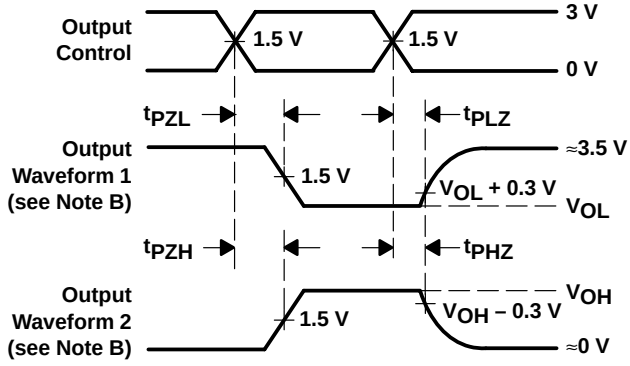

VOLTAGE WAVEFORMS
ENABLE AND DISABLE TIMES
LOW- AND HIGH-LEVEL ENABLING

NOTES: A. C_L includes probe and jig capacitance.
B. Waveform 1 is for an output with internal conditions such that the output is low except when disabled by the output control. Waveform 2 is for an output with internal conditions such that the output is high except when disabled by the output control.
C. The outputs are measured one at a time with one input transition per measurement.

Figure 1. Load Circuit and Voltage Waveforms

PACKAGING INFORMATION

Orderable Device	Status (1)	Package Type	Package Drawing	Pins	Package Qty	Eco Plan (2)	Lead finish/ Ball material (6)	MSL Peak Temp (3)	Op Temp (°C)	Device Marking (4/5)	Samples
5962-9682701QLA	ACTIVE	CDIP	JT	24	15	Non-RoHS & Green	SNPB	N / A for Pkg Type	-55 to 125	5962-9682701QL A CY29FCT818ATDM B	Samples
CY29FCT818ATDMB	ACTIVE	CDIP	JT	24	15	Non-RoHS & Green	SNPB	N / A for Pkg Type	-55 to 125	5962-9682701QL A CY29FCT818ATDM B	Samples
CY29FCT818CTSOCT	ACTIVE	SOIC	DW	24	2000	RoHS & Green	NIPDAU	Level-1-260C-UNLIM	-40 to 85	29FCT818C	Samples

(1) The marketing status values are defined as follows:
ACTIVE: Product device recommended for new designs.
LIFEBUY: TI has announced that the device will be discontinued, and a lifetime-buy period is in effect.
NRND: Not recommended for new designs. Device is in production to support existing customers, but TI does not recommend using this part in a new design.
PREVIEW: Device has been announced but is not in production. Samples may or may not be available.
OBSOLETE: TI has discontinued the production of the device.

(2) **RoHS:** TI defines "RoHS" to mean semiconductor products that are compliant with the current EU RoHS requirements for all 10 RoHS substances, including the requirement that RoHS substance do not exceed 0.1% by weight in homogeneous materials. Where designed to be soldered at high temperatures, "RoHS" products are suitable for use in specified lead-free processes. TI may reference these types of products as "Pb-Free".
RoHS Exempt: TI defines "RoHS Exempt" to mean products that contain lead but are compliant with EU RoHS pursuant to a specific EU RoHS exemption.
Green: TI defines "Green" to mean the content of Chlorine (Cl) and Bromine (Br) based flame retardants meet JS709B low halogen requirements of <=1000ppm threshold. Antimony trioxide based flame retardants must also meet the <=1000ppm threshold requirement.

(3) MSL, Peak Temp. - The Moisture Sensitivity Level rating according to the JEDEC industry standard classifications, and peak solder temperature.

(4) There may be additional marking, which relates to the logo, the lot trace code information, or the environmental category on the device.

(5) Multiple Device Markings will be inside parentheses. Only one Device Marking contained in parentheses and separated by a "~" will appear on a device. If a line is indented then it is a continuation of the previous line and the two combined represent the entire Device Marking for that device.

(6) Lead finish/Ball material - Orderable Devices may have multiple material finish options. Finish options are separated by a vertical ruled line. Lead finish/Ball material values may wrap to two lines if the finish value exceeds the maximum column width.

Important Information and Disclaimer: The information provided on this page represents TI's knowledge and belief as of the date that it is provided. TI bases its knowledge and belief on information provided by third parties, and makes no representation or warranty as to the accuracy of such information. Efforts are underway to better integrate information from third parties. TI has taken and continues to take reasonable steps to provide representative and accurate information but may not have conducted destructive testing or chemical analysis on incoming materials and chemicals. TI and TI suppliers consider certain information to be proprietary, and thus CAS numbers and other limited information may not be available for release.

In no event shall TI's liability arising out of such information exceed the total purchase price of the TI part(s) at issue in this document sold by TI to Customer on an annual basis.

TAPE AND REEL INFORMATION

REEL DIMENSIONS

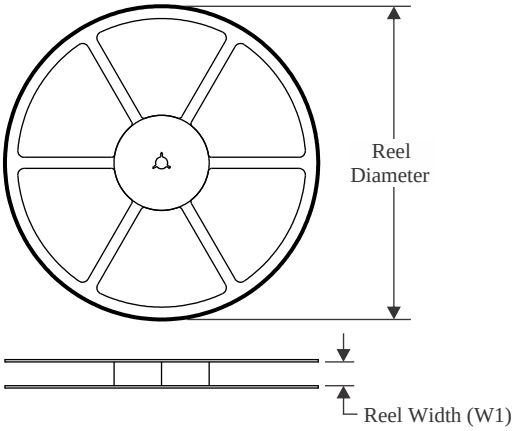

TAPE DIMENSIONS

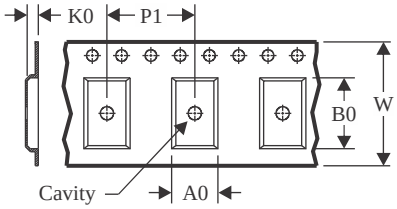

A0	Dimension designed to accommodate the component width
B0	Dimension designed to accommodate the component length
K0	Dimension designed to accommodate the component thickness
W	Overall width of the carrier tape
P1	Pitch between successive cavity centers

QUADRANT ASSIGNMENTS FOR PIN 1 ORIENTATION IN TAPE

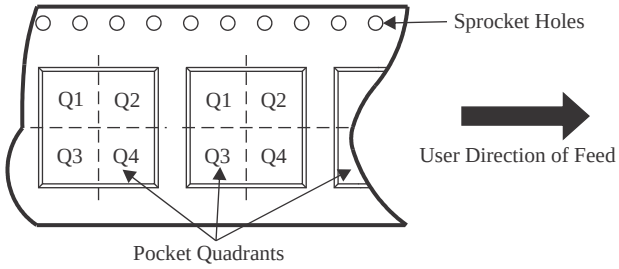

*All dimensions are nominal

Device	Package Type	Package Drawing	Pins	SPQ	Reel Diameter (mm)	Reel Width W1 (mm)	A0 (mm)	B0 (mm)	K0 (mm)	P1 (mm)	W (mm)	Pin1 Quadrant
CY29FCT818CTSOCT	SOIC	DW	24	2000	330.0	24.4	10.75	15.7	2.7	12.0	24.0	Q1

TAPE AND REEL BOX DIMENSIONS

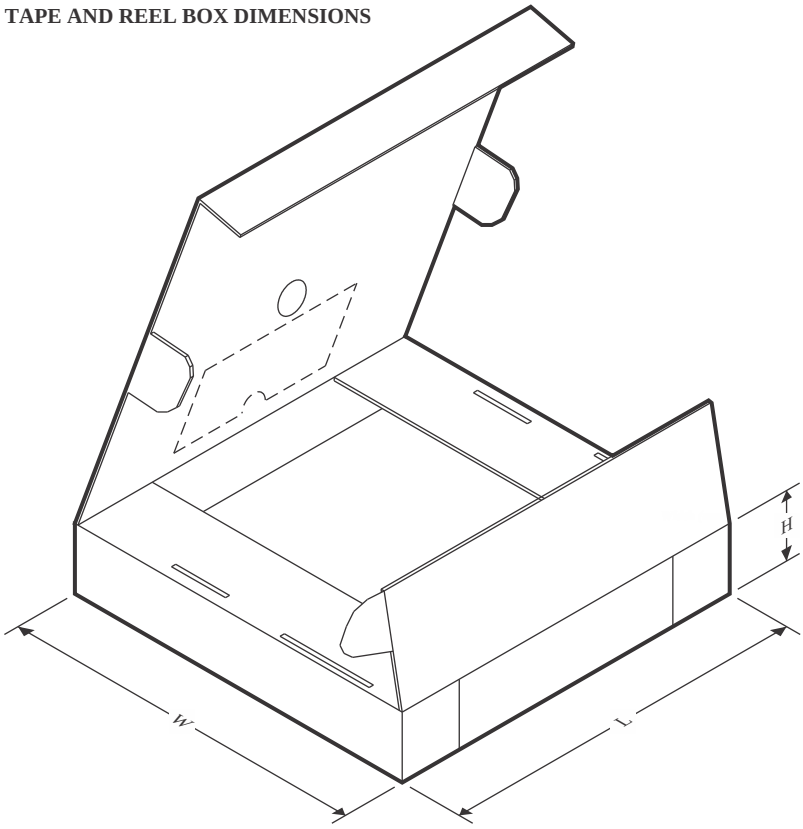

*All dimensions are nominal

Device	Package Type	Package Drawing	Pins	SPQ	Length (mm)	Width (mm)	Height (mm)
CY29FCT818CTSOCT	SOIC	DW	24	2000	350.0	350.0	43.0

MCER004A – JANUARY 1995 – REVISED JANUARY 1997

JT (R-GDIP-T)** **CERAMIC DUAL-IN-LINE**

24 LEADS SHOWN

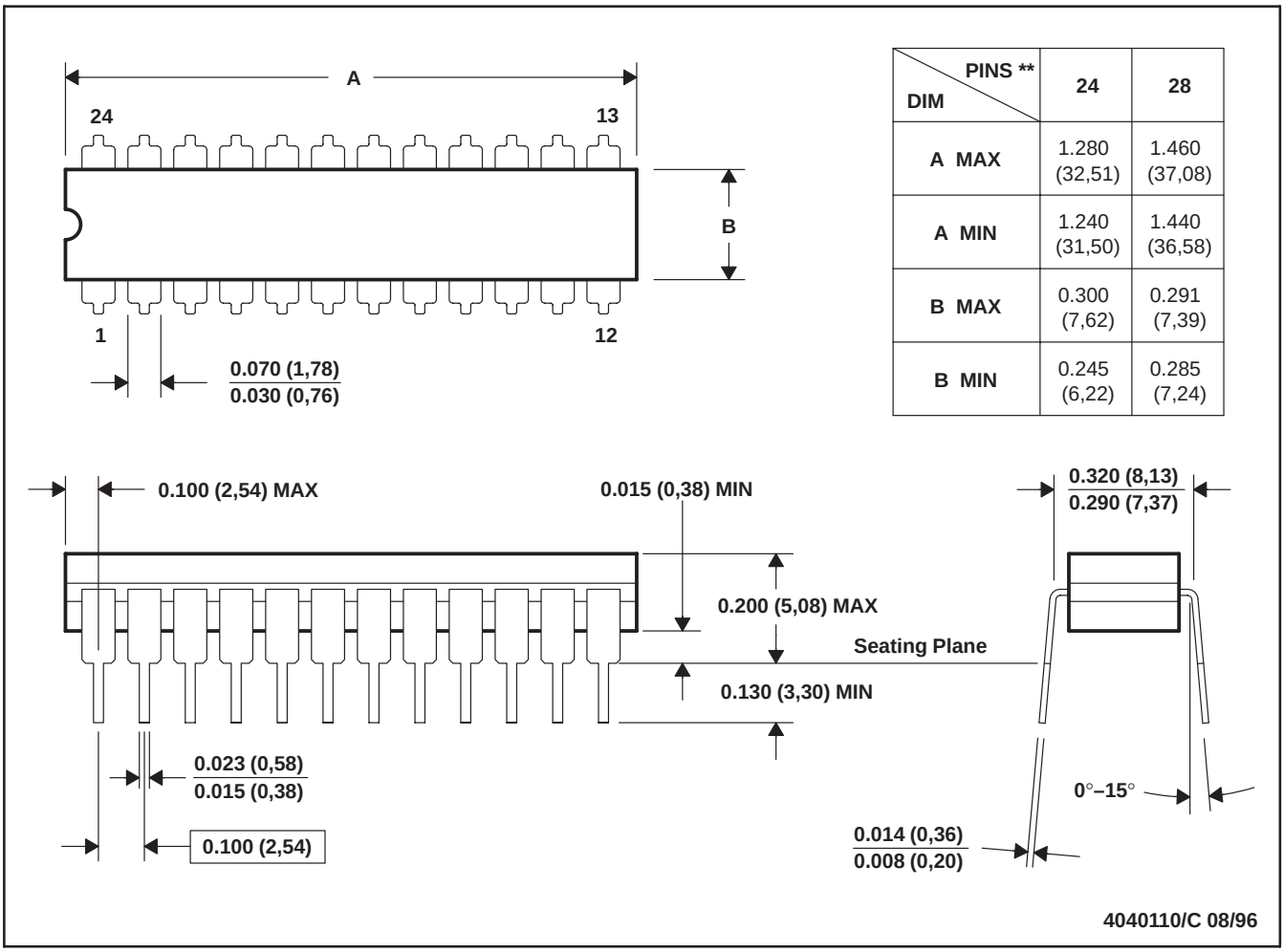

DIM \ PINS **	24	28
A MAX	1.280 (32,51)	1.460 (37,08)
A MIN	1.240 (31,50)	1.440 (36,58)
B MAX	0.300 (7,62)	0.291 (7,39)
B MIN	0.245 (6,22)	0.285 (7,24)

NOTES: A. All linear dimensions are in inches (millimeters).
B. This drawing is subject to change without notice.
C. This package can be hermetically sealed with a ceramic lid using glass frit.
D. Index point is provided on cap for terminal identification.
E. Falls within MIL STD 1835 GDIP3-T24, GDIP4-T28, and JEDEC MO-058 AA, MO-058 AB

DW (R–PDSO–G24) PLASTIC SMALL OUTLINE

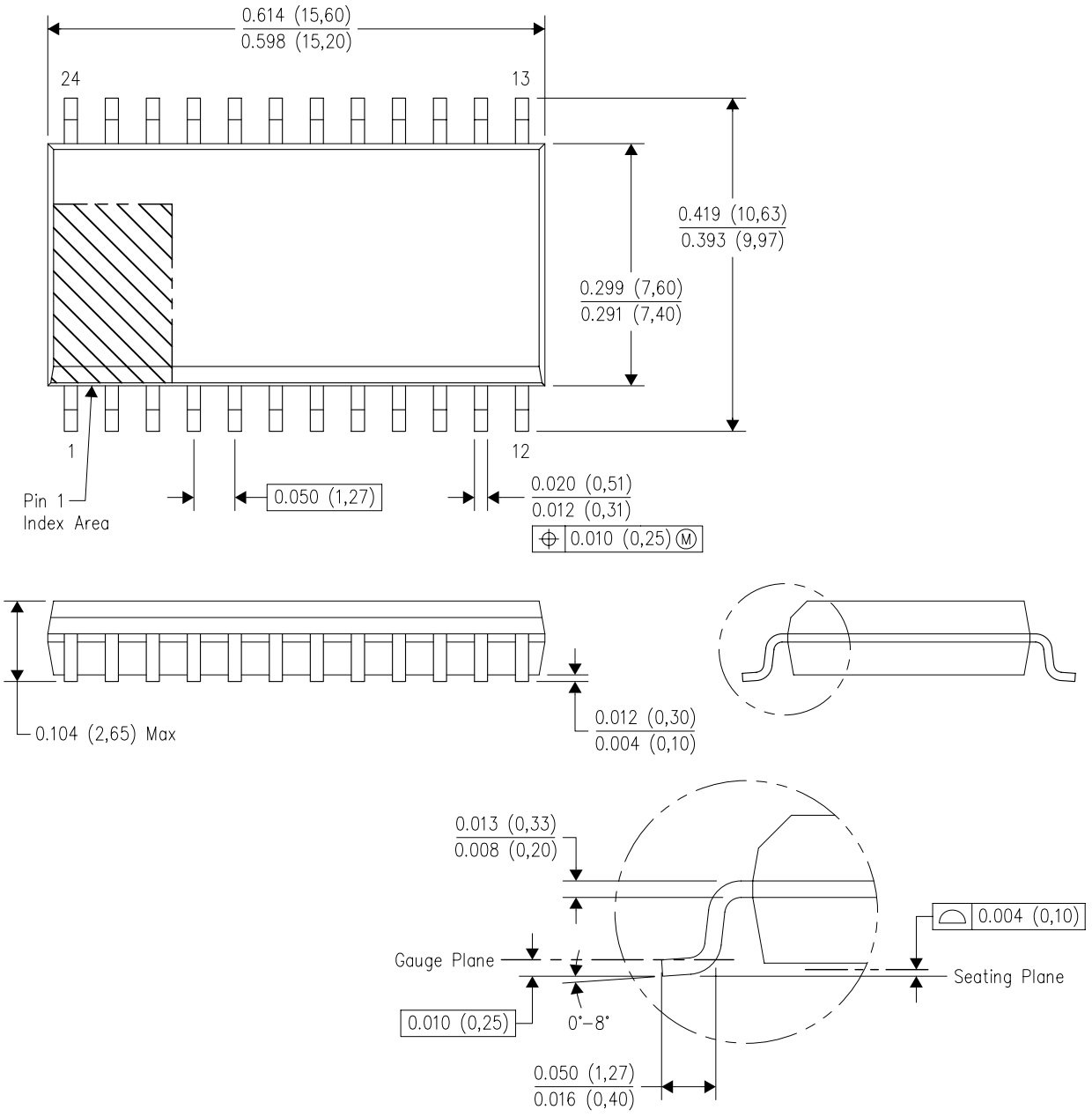

NOTES:
A. All linear dimensions are in inches (millimeters). Dimensioning and tolerancing per ASME Y14.5M–1994.
B. This drawing is subject to change without notice.
C. Body dimensions do not include mold flash or protrusion not to exceed 0.006 (0,15).
D. Falls within JEDEC MS–013 variation AD.

IMPORTANT NOTICE AND DISCLAIMER

TI PROVIDES TECHNICAL AND RELIABILITY DATA (INCLUDING DATA SHEETS), DESIGN RESOURCES (INCLUDING REFERENCE DESIGNS), APPLICATION OR OTHER DESIGN ADVICE, WEB TOOLS, SAFETY INFORMATION, AND OTHER RESOURCES “AS IS” AND WITH ALL FAULTS, AND DISCLAIMS ALL WARRANTIES, EXPRESS AND IMPLIED, INCLUDING WITHOUT LIMITATION ANY IMPLIED WARRANTIES OF MERCHANTABILITY, FITNESS FOR A PARTICULAR PURPOSE OR NON-INFRINGEMENT OF THIRD PARTY INTELLECTUAL PROPERTY RIGHTS.

These resources are intended for skilled developers designing with TI products. You are solely responsible for (1) selecting the appropriate TI products for your application, (2) designing, validating and testing your application, and (3) ensuring your application meets applicable standards, and any other safety, security, regulatory or other requirements.

These resources are subject to change without notice. TI grants you permission to use these resources only for development of an application that uses the TI products described in the resource. Other reproduction and display of these resources is prohibited. No license is granted to any other TI intellectual property right or to any third party intellectual property right. TI disclaims responsibility for, and you will fully indemnify TI and its representatives against, any claims, damages, costs, losses, and liabilities arising out of your use of these resources.

TI’s products are provided subject to TI’s Terms of Sale or other applicable terms available either on ti.com or provided in conjunction with such TI products. TI’s provision of these resources does not expand or otherwise alter TI’s applicable warranties or warranty disclaimers for TI products.

TI objects to and rejects any additional or different terms you may have proposed.

Mailing Address: Texas Instruments, Post Office Box 655303, Dallas, Texas 75265
Copyright © 2023, Texas Instruments Incorporated

Looking for pricing, stock, or lifecycle information?

Click below to explore more details on WIN SOURCE:

- View CY29FCT818ATDMB on WIN SOURCE
- Texas Instruments Information

Optimize Your Supply Chain with WIN SOURCE Solutions

- Global Sourcing Solution
- Obsolete Management
- Cost Control Management
- Shortage Management
- Alternative Solution
- Excess Inventory Management