THE DATASHEET OF

LM317AEMPX

LM317A 1% Accurate Three-Terminal Adjustable Regulator

1 Features

- Typical 0.005%/V Line Regulation
- 1% Output Voltage Tolerance
- 1.5-A Output Current
- Adjustable Output Down to 1.25 V
- Current Limit Constant with Temperature
- 80-dB Ripple Rejection
- Short-Circuit Protected Output
- −40°C to 125°C Operating Temperature Range

2 Applications

- Automotive LED Lighting
- Battery Chargers
- Post Regulation for Switching Supplies
- Constant-Current Regulator
- Microprocessor Supplies

Typical Application

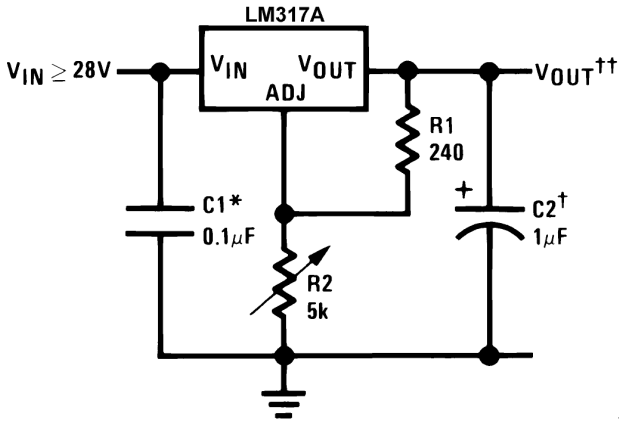

*Needed if device is more than 6 inches from filter capacitors.

†Optional—improves transient response

$$_{\dagger\dagger} V_{OUT} = 1.25\ V \left(1 + \frac{R2}{R1}\right) + I_{ADJ}\left(R_2\right)$$

3 Description

The LM317A adjustable 3-terminal, positive-voltage regulators are capable of supplying current in excess of 1.5 A over a 1.25-V to 37-V output range and provide 1% output-voltage accuracy. The LM317A device is available in an SOT-223 package, which makes it ideal for space-constrained applications that require high-performance regulation. The device is exceptionally easy to use and requires only two external resistors to set the output voltage. Both line regulation and load regulation are better achieved with the LM317A device than with standard fixed regulators.

The LM317A offers full overload protection such as current limit, thermal-overload protection, and safe-area protection. All overload protection circuitry remains fully functional even if the adjustment terminal is disconnected.

Typically, no capacitors are needed unless the device is situated more than 6 inches from the input filter capacitors, in which case an input bypass is needed. An optional output capacitor can be added to improve transient response. The adjustment terminal can be bypassed to achieve very high ripple-rejection ratios that are difficult to achieve with standard 3-terminal regulators.

Because the LM317A regulator is *floating* and detects only the input-to-output differential voltage, supplies of several hundred volts can be regulated as long as the maximum input-to-output differential is not exceeded. Exceeding the maximum input-to-output deferential will result in short-circuiting the output.

By connecting a fixed resistor between the adjustment pin and output, the LM317A can be also used as a precision current regulator. Supplies with electronic shutdown can be achieved by clamping the adjustment terminal to ground, which programs the output to 1.25 V where most loads draw little current.

For applications requiring greater output current, see data sheets for LM150 series (3A), SNVS772, and LM138 series (5A), SNVS771. For the negative complement, see LM137 (SNVS778) series data sheet.

Device Information(1)

PART NUMBER	PACKAGE	BODY SIZE (NOM)
LM317A	TO-220 (3)	14.986 mm × 10.16 mm
	SOT-223 (4)	6.50 mm × 3.50 mm
	TO (3)	8.255 mm × 8.255 mm
	TO-252 (3)	6.58 mm × 6.10 mm

(1) For all available packages, see the orderable addendum at the end of the data sheet.

An IMPORTANT NOTICE at the end of this data sheet addresses availability, warranty, changes, use in safety-critical applications, intellectual property matters and other important disclaimers. PRODUCTION DATA.

Table of Contents

1 Features ... 1
2 Applications ... 1
3 Description ... 1
4 Revision History ... 2
5 Device Comparison Table ... 3
6 Pin Configuration and Functions ... 4
7 Specifications ... 5
7.1 Absolute Maximum Ratings ... 5
7.2 ESD Ratings ... 5
7.3 Recommended Operating Conditions ... 5
7.4 Thermal Information ... 5
7.5 Electrical Characteristics ... 6
7.6 Typical Characteristics ... 7
8 Detailed Description ... 10
8.1 Overview ... 10
8.2 Functional Block Diagram ... 11
8.3 Feature Description ... 12
8.4 Device Functional Modes ... 12
9 Application and Implementation ... 14
9.1 Application Information ... 14
9.2 Typical Applications ... 14
10 Power Supply Recommendations ... 25
11 Layout ... 25
11.1 Layout Guidelines ... 25
11.2 Layout Examples ... 25
11.3 Thermal Considerations ... 26
12 Device and Documentation Support ... 32
12.1 Documentation Support ... 32
12.2 Community Resources ... 32
12.3 Trademarks ... 32
12.4 Electrostatic Discharge Caution ... 32
12.5 Glossary ... 32
13 Mechanical, Packaging, and Orderable Information ... 32

4 Revision History

NOTE: Page numbers for previous revisions may differ from page numbers in the current version.

DATE	REVISION	NOTES
October 2015	*	Initial Release

Copyright © 2015, Texas Instruments Incorporated

5 Device Comparison Table

Table 1. LM317 Family Options

PART NUMBER	TEMPERATURE	DESCRIPTION	PRODUCT FOLDER
LM317-N	0°C to 125°C	40-V, 1.5-A Catalog device	Click here
LM317A	−40°C to 125°C	40-V, 1.5-A Industrial device	Click here
LM317HV	0°C to 125°C	60-V, 1.5-A Catalog device	Click here
LM317L-N	−40°C to 125°C	40-V, 0.1-A Industrial device	Click here
LM117	−55°C to 150°C	40-V, 1.5-A Extended temperature device	Click here
LM117HV	−55°C to 150°C	60-V, 1.5-A Extended temperature device	Click here
LM117HVQML	−55°C to 125°C	60-V, 1.5-A Military grade device per spec MIL-PRF-38535	Click here
LM117HVQML-SP	−55°C to 125°C	60-V, 1.5-A Space grade device	Click here
LM117JAN	−55°C to 125°C	40-V, 1.5-A Military grade device per spec MIL-PRF-38510	Click here
LM117QML	−55°C to 125°C	40-V, 1.5-A Military grade device per spec MIL-PRF-38535	Click here
LM117QML-SP	−55°C to 125°C	40-V, 1.5-A Space grade device	Click here

Copyright © 2015, Texas Instruments Incorporated

6 Pin Configuration and Functions

Metal Can NDT Package
3-Pin TO
Bottom View

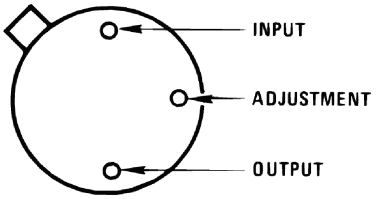

CASE IS OUTPUT

Surface-Mount DCY Package
4-Pin SOT-223
Top View

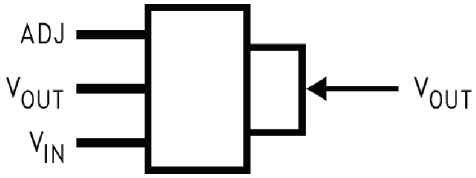

Plastic NDE Package
3-Pin TO-220
Front View

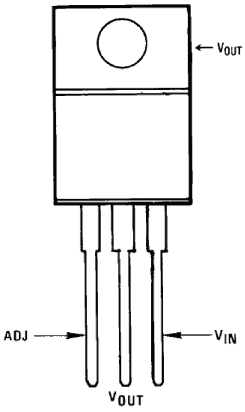

Surface-Mount NDP Package
4-Pin TO-252
Front View

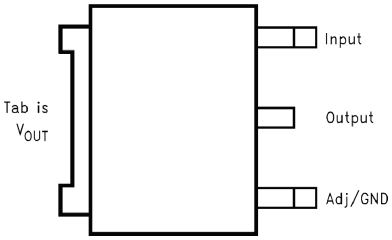

Pin Functions

PIN					I/O	DESCRIPTION
NAME	TO-220	SOT-223	TO-252	TO		
ADJ	1	1	1	2	—	Adjust pin
V_{IN}	3	3	3	1	I	Input voltage pin for the regulator
V_{OUT}	2, TAB	2, 4	2, TAB	3, CASE	O	Output voltage pin for the regulator

Copyright © 2015, Texas Instruments Incorporated

7 Specifications

7.1 Absolute Maximum Ratings

over operating free-air temperature range (unless otherwise noted)(1)(2)

		MIN	MAX	UNIT
Power dissipation		Internally Limited		
Input-output voltage differential		−0.3	40	V
Lead temperature	Metal Package (Soldering, 10 seconds)		300	°C
	Plastic Package (Soldering, 4 seconds)		260	°C
Storage temperature, T_{stg}		−65	150	°C

(1) Stresses beyond those listed under *Absolute Maximum Ratings* may cause permanent damage to the device. These are stress ratings only, which do not imply functional operation of the device at these or any other conditions beyond those indicated under *Recommended Operating Conditions*. Exposure to absolute-maximum-rated conditions for extended periods may affect device reliability.
(2) If Military/Aerospace specified devices are required, please contact the Texas Instruments Sales Office/Distributors for availability and specifications.

7.2 ESD Ratings

			VALUE	UNIT
$V_{(ESD)}$	Electrostatic discharge	Human body model (HBM)(1)	±3000	V

(1) Manufacturing with less than 500-V HBM is possible with the necessary precautions. Pins listed as ±3000 V may actually have higher performance.

7.3 Recommended Operating Conditions

over operating free-air temperature range (unless otherwise noted)

	MIN	MAX	UNIT
Operating temperature	−40	125	°C

7.4 Thermal Information

THERMAL METRIC(1)(2)		LM317A				UNIT
		NDE (TO-220)	DCY (SOT-223)	NDT (TO)	NDP (TO-252)	
		3 PINS	4 PINS	3 PINS	3 PINS	
$R_{\theta JA}$	Junction-to-ambient thermal resistance	23.3	59.6	186(3)	54.0	°C/W
$R_{\theta JC(top)}$	Junction-to-case (top) thermal resistance	16.2	39.3	21	51.3	°C/W
$R_{\theta JB}$	Junction-to-board thermal resistance	4.9	8.4	—	28.6	°C/W
ψ_{JT}	Junction-to-top characterization parameter	2.7	1.8	—	3.9	°C/W
ψ_{JB}	Junction-to-board characterization parameter	4.9	8.3	—	28.1	°C/W
$R_{\theta JC(bot)}$	Junction-to-case (bottom) thermal resistance	1.1	—	—	0.9	°C/W

(1) For more information about traditional and new thermal metrics, see the *Semiconductor and IC Package Thermal Metrics* application report, SPRA953.
(2) When surface mount packages are used (SOT-223, TO-252), the junction to ambient thermal resistance can be reduced by increasing the PCB copper area that is thermally connected to the package. See *Heatsink Requirements* for heatsink techniques.
(3) No heatsink.

Copyright © 2015, Texas Instruments Incorporated

7.5 Electrical Characteristics

Some specifications apply over full operating temperature range as noted. Unless otherwise specified, T_J = 25°C, $V_{IN} - V_{OUT}$ = 5 V, and I_{OUT} = 10 mA.(1)

PARAMETER	TEST CONDITIONS		MIN	TYP	MAX	UNIT
Reference voltage	T_J = 25°C		1.238	1.250	1.262	V
	3 V ≤ ($V_{IN} - V_{OUT}$) ≤ 40 V, 10 mA ≤ I_{OUT} ≤ I_{MAX}(1) over full operating temperature range		1.225	1.250	1.270	V
Line regulation	3 V ≤ ($V_{IN} - V_{OUT}$) ≤ 40 V(2)	T_J = 25°C		0.005	0.01	%/V
		over full operating temperature range		0.01	0.02	
Load regulation	10 mA ≤ I_{OUT} ≤ I_{MAX}(1) (2)	T_J = 25°C		0.1%	0.5%	
		over full operating temperature range		0.3%	1%	
Thermal regulation	20-ms pulse			0.04	0.07	%/W
Adjustment pin current	over full operating temperature range			50	100	µA
Adjustment pin current change	10 mA ≤ I_{OUT} ≤ I_{MAX}(1) 3 V ≤ ($V_{IN} - V_{OUT}$) ≤ 40 V (over full operating temperature range)			0.2	5	µA
Temperature stability	T_{MIN} ≤ T_J ≤ T_{MAX}, over full operating temperature range			1%		
Minimum load current	($V_{IN} - V_{OUT}$) = 40 V over full operating temperature range			3.5	10	mA
Current limit	($V_{IN} - V_{OUT}$) ≤ 15 V	SOT-223, TO-220 Packages, over full operating temperature range	1.5	2.2	3.4	A
		TO, TO-252 Packages, over full operating temperature range	0.5	0.8	1.8	
	($V_{IN} - V_{OUT}$) = 40 V	SOT-223, TO-220 Packages	0.15	0.40		A
		TO, TO-252 Packages	0.075	0.20		
RMS output noise, % of V_{OUT}	10 Hz ≤ f ≤ 10 kHz			0.003%		
Ripple rejection ratio	V_{OUT} = 10 V, f = 120 Hz, C_{ADJ} = 0 µF over full operating temperature range			65		dB
	V_{OUT} = 10 V, f = 120 Hz, C_{ADJ} = 10 µF over full operating temperature range		66	80		dB
Long-term stability	T_J = 125°C, 1000 hrs			0.3%	1%	

(1) I_{MAX} = 1.5 A for the NDE (TO-220). I_{MAX} = 1.0 A for the DCY (SOT-223) package.
I_{MAX} = 0.5 A for the NDT (TO) and NDP (TO-252) packages. Device power dissipation (P_D) is limited by ambient temperature (T_A), device maximum junction temperature (T_J), and package thermal resistance (θ_{JA}). The maximum allowable power dissipation at any temperature is : $P_{D(MAX)} = ((T_{J(MAX)} - T_A) / \theta_{JA})$. All minimum and maximum limits are ensured to TI's Average Outgoing Quality Level (AOQL).

(2) Regulation is measured at a constant junction temperature, using pulse testing with a low duty cycle. Changes in output voltage due to heating effects are covered under the specifications for thermal regulation.

Copyright © 2015, Texas Instruments Incorporated

7.6 Typical Characteristics

Output Capacitor = 0 µF unless otherwise noted

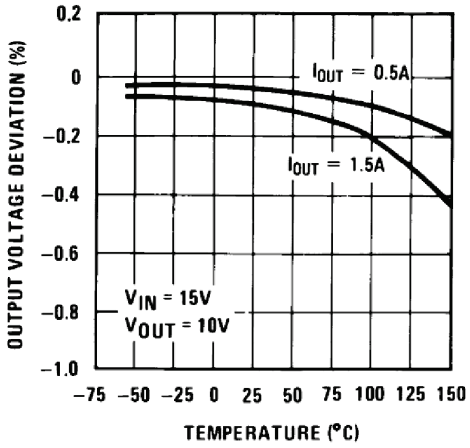

Figure 1. Load Regulation

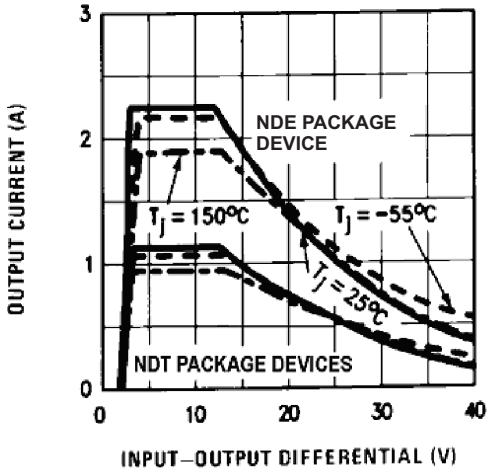

Figure 2. Current Limit

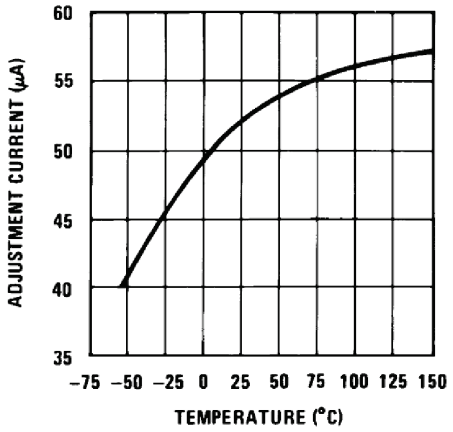

Figure 3. Adjustment Current

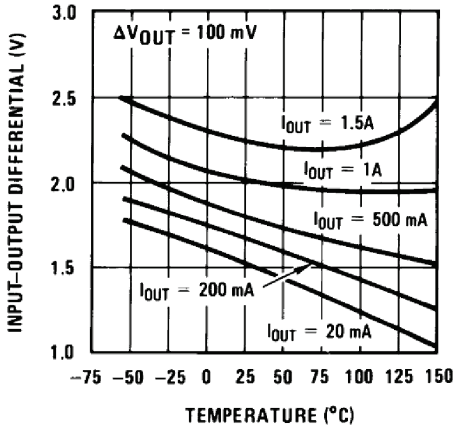

Figure 4. Dropout Voltage

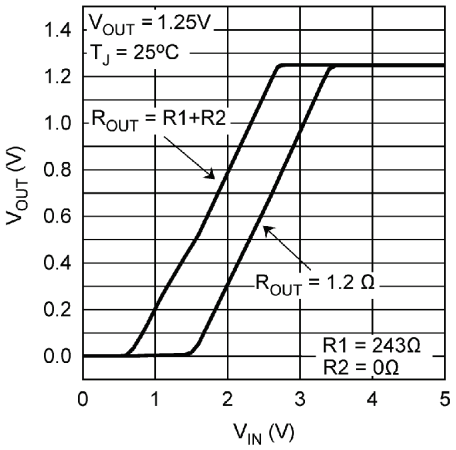

Figure 5. V_{OUT} vs V_{IN}, V_{OUT} = V_{REF}

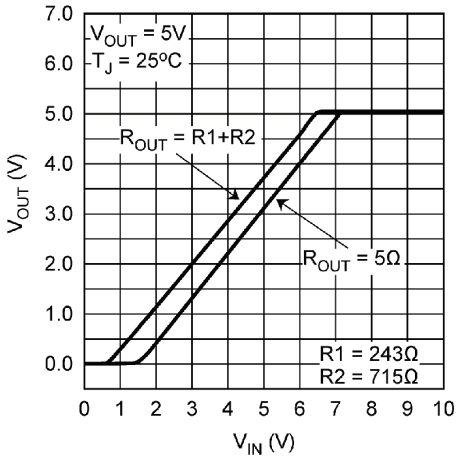

Figure 6. V_{OUT} vs V_{IN}, V_{OUT} = 5V

Copyright © 2015, Texas Instruments Incorporated

Typical Characteristics (continued)

Output Capacitor = 0 µF unless otherwise noted

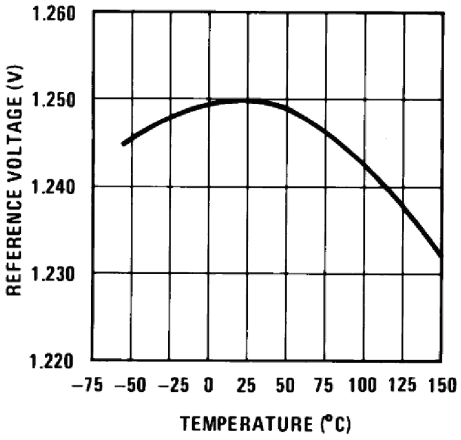

Figure 7. Temperature Stability

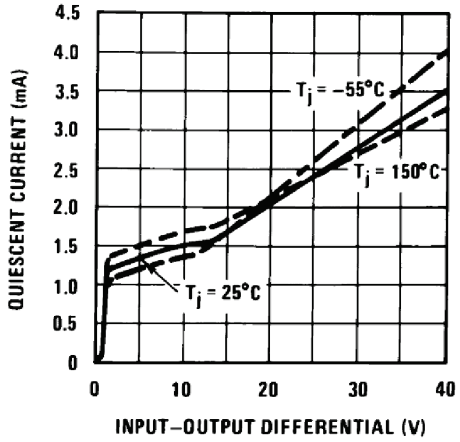

Figure 8. Minimum Operating Current

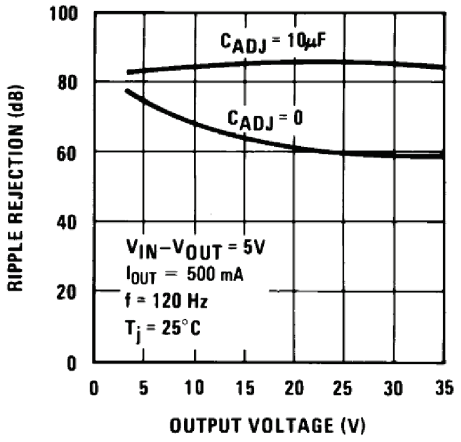

Figure 9. Ripple Rejection

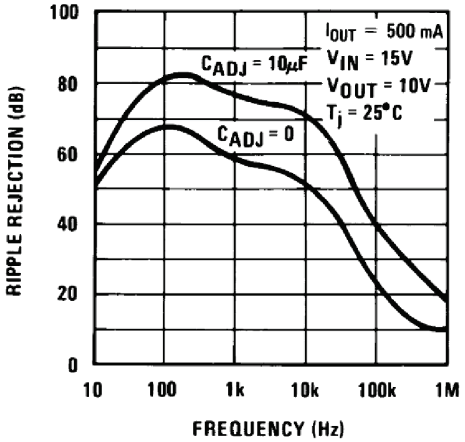

Figure 10. Ripple Rejection

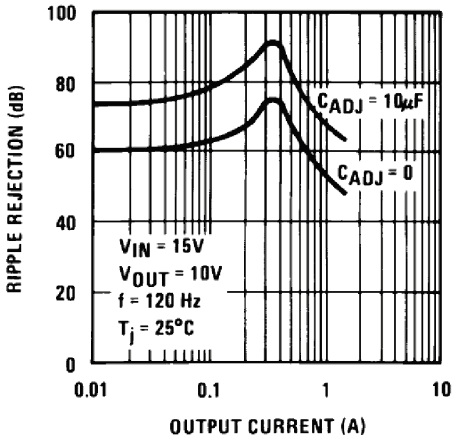

Figure 11. Ripple Rejection

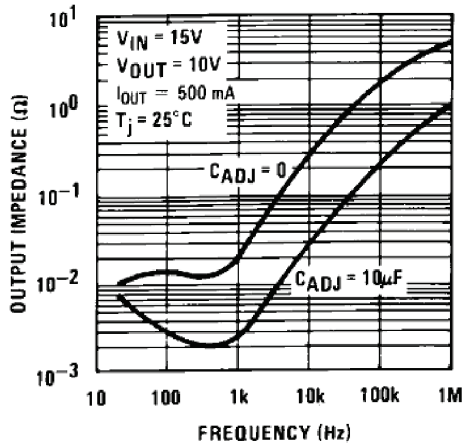

Figure 12. Output Impedance

Copyright © 2015, Texas Instruments Incorporated

Typical Characteristics (continued)

Output Capacitor = 0 µF unless otherwise noted

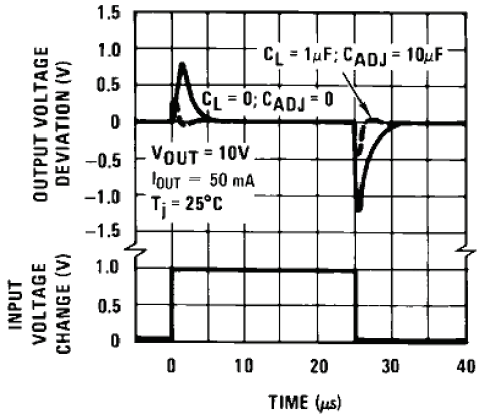

Figure 13. Line Transient Response

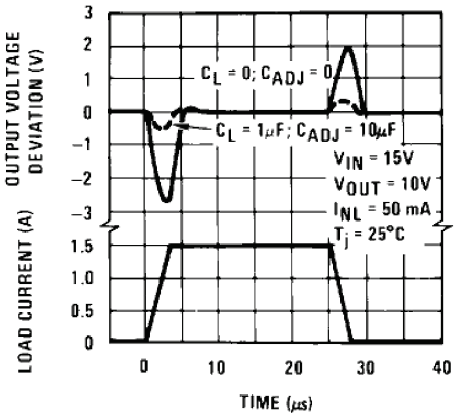

Figure 14. Load Transient Response

8 Detailed Description

8.1 Overview

In operation, the LM317A develops a nominal 1.25-V reference voltage, V_{REF}, between the output and adjustment terminal. The reference voltage is impressed across program resistor R1 and, because the voltage is constant, a constant current I_1 then flows through the output set resistor R2 giving an output voltage calculated by Equation 1:

$$V_{OUT} = 1.25\ V \left(1 + \frac{R2}{R1}\right) + I_{ADJ}\left(R_2\right) \quad (1)$$

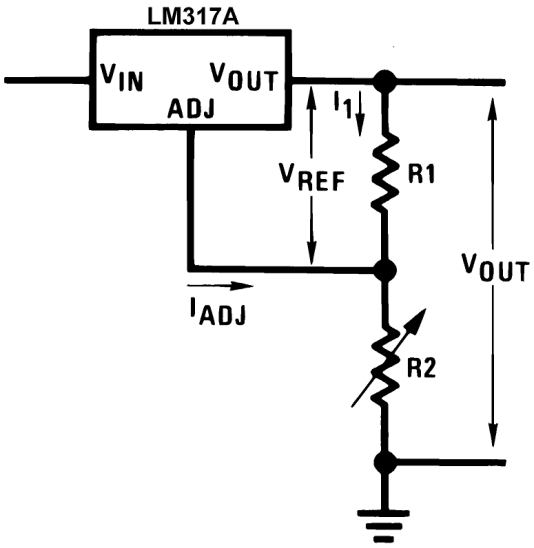

Figure 15. Setting the V_{OUT} Voltage

Because the 100-µA current from the adjustment terminal represents an error term, the LM317A was designed to minimize I_{ADJ} and make it very constant with line and load changes. To do this, all quiescent operating current is returned to the output, establishing a minimum load current requirement. If there is insufficient load on the output, the output will rise.

Copyright © 2015, Texas Instruments Incorporated

8.2 Functional Block Diagram

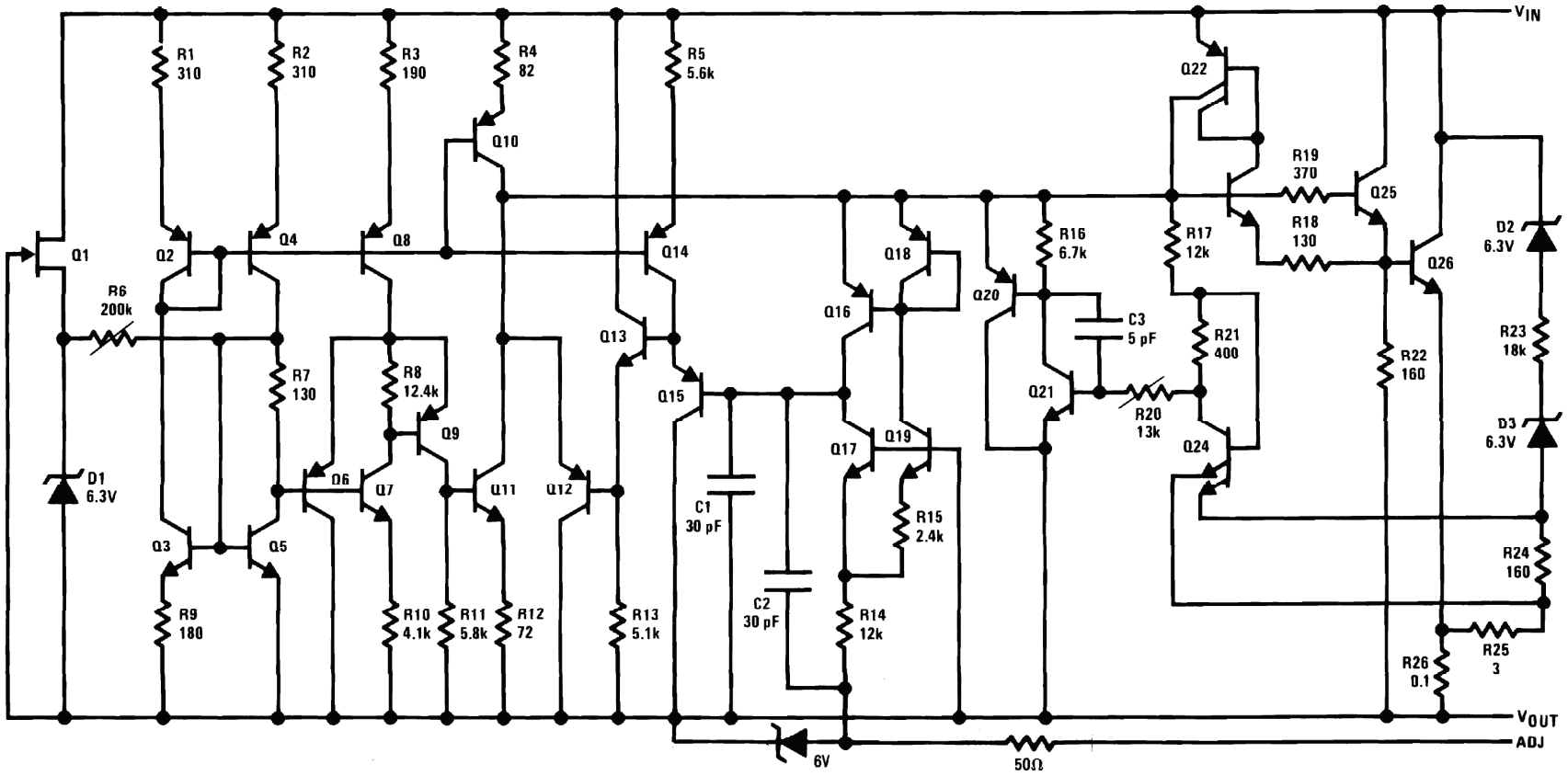

8.3 Feature Description

8.3.1 Load Regulation

The LM317A is capable of providing extremely good load regulation but a few precautions are needed to obtain maximum performance. The current set resistor, R1, should be connected near the output terminal of the regulator rather than near the load. If R1 is placed too far from the output terminal, then the increased trace resistance, R_S, will cause an error voltage drop in the adjustment loop and degrade load regulation performance. Therefore, R1 should be placed as close as possible to the output terminal to minimize R_S and maximize load regulation performance.

Figure 16 shows the effect of the trace resistance, R_S, when R1 is placed far from the output terminal of the regulator. It is clear that R_S will cause an error voltage drop especially during higher current loads, so it is important to minimize the R_S trace resistance by keeping R1 close to the regulator output terminal.

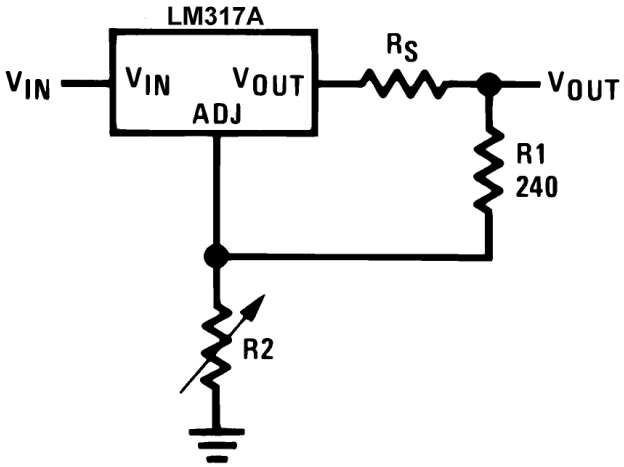

Figure 16. Regulator with Line Resistance in Output Lead

With the TO package, care should be taken to minimize the wire length of the output lead. The ground of R2 can be returned near the ground of the load to provide remote ground sensing and improve load regulation.

8.4 Device Functional Modes

8.4.1 External Capacitors

An input-bypass capacitor is recommended. A 0.1-µF disc or 1-µF solid tantalum on the input is suitable input bypassing for almost all applications. The device is more sensitive to the absence of input bypassing when adjustment or output capacitors are used, but the above values will eliminate the possibility of problems.

The adjustment terminal can be bypassed to ground on the LM317A to improve ripple rejection. This bypass capacitor prevents ripple from being amplified as the output voltage is increased. With a 10-µF bypass capacitor, 80-dB ripple rejection is obtainable at any output level. Increases over 10 µF do not appreciably improve the ripple rejection at frequencies above 120 Hz. If the bypass capacitor is used, it is sometimes necessary to include protection diodes to prevent the capacitor from discharging through internal low current paths and damaging the device.

In general, the best type of capacitor to use is solid tantalum. Solid tantalum capacitors have low impedance even at high frequencies. Depending upon capacitor construction, it takes about 25 µF in aluminum electrolytic to equal 1-µF solid tantalum at high frequencies. Ceramic capacitors are also good at high frequencies. However, some types have a large decrease in capacitance at frequencies around 0.5 MHz. For this reason, 0.01-µF disc may seem to work better than a 0.1-µF disc as a bypass.

Although the LM317A is stable with no output capacitors, like any feedback circuit, certain values of external capacitance can cause excessive ringing. This occurs with values between 500 pF and 5000 pF. A 1-µF solid tantalum (or 25-µF aluminum electrolytic) on the output swamps this effect and insures stability. Any increase of the load capacitance larger than 10 µF will merely improve the loop stability and output impedance.

Copyright © 2015, Texas Instruments Incorporated

Device Functional Modes (continued)

8.4.2 Protection Diodes

When external capacitors are used with any IC regulator, it is sometimes necessary to add protection diodes to prevent the capacitors from discharging through low-current points into the regulator. Most 10-µF capacitors have low enough internal series resistance to deliver 20-A spikes when shorted. Although the surge is short, there is enough energy to damage parts of the IC.

When an output capacitor is connected to a regulator and the input is shorted, the output capacitor will discharge into the output of the regulator. The discharge current depends on the value of the capacitor, the output voltage of the regulator, and the rate of decrease of V_{IN}. In the LM317A, this discharge path is through a large junction that is able to sustain 15-A surge with no problem. This is not true of other types of positive regulators. For output capacitors of 25 µF or less, there is no need to use diodes.

The bypass capacitor on the adjustment terminal can discharge through a low current junction. Discharge occurs when *either* the input, or the output, is shorted. Internal to the LM317A is a 50-Ω resistor which limits the peak discharge current. No protection is needed for output voltages of 25 V or less and 10-µF capacitance. Figure 17 shows an LM317A with protection diodes included for use with outputs greater than 25 V and high values of output capacitance.

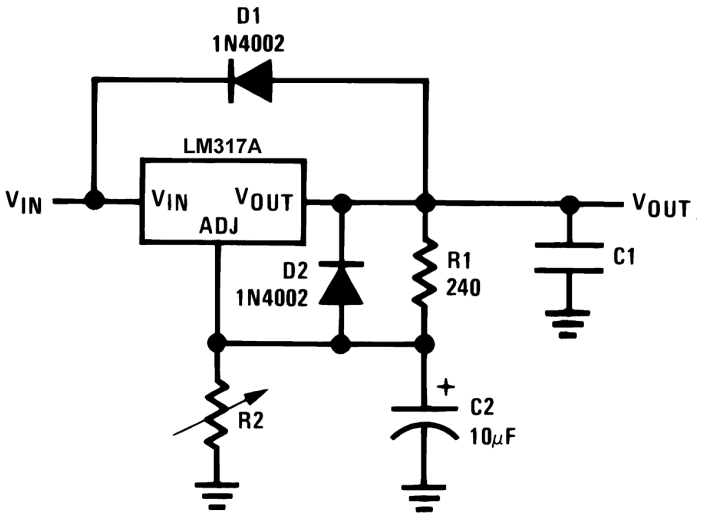

$$V_{OUT} = 1.25\ V\left(1+\frac{R2}{R1}\right)+I_{ADJ}\left(R_2\right)$$

D1 protects against C1

D2 protects against C2

Figure 17. Regulator With Protection Diodes

9 Application and Implementation

NOTE

Information in the following applications sections is not part of the TI component specification, and TI does not warrant its accuracy or completeness. TI's customers are responsible for determining suitability of components for their purposes. Customers should validate and test their design implementation to confirm system functionality.

9.1 Application Information

The LM317A is a versatile, high-performance, linear regulator with 1% output-voltage accuracy. An output capacitor can be added to further improve transient response, and the ADJ pin can be bypassed to achieve very high ripple-rejection ratios. Its functionality can be utilized in many different applications that require high performance regulation, such as battery chargers, constant-current regulators, and microprocessor supplies.

9.2 Typical Applications

9.2.1 1.25-V to 25-V Adjustable Regulator

The LM317A can be used as a simple, low-dropout regulator to enable a variety of output voltages needed for demanding applications. By using an adjustable R2 resistor, a variety of output voltages can be made possible as shown in Figure 18.

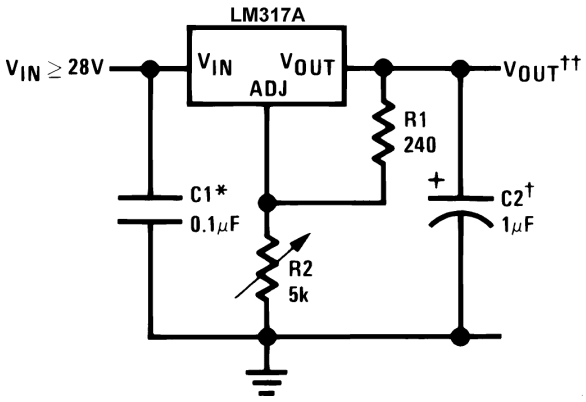

NOTE: Full output current not available at high input-output voltages

*Needed if device is more than 6 inches from filter capacitors.

†Optional—improves transient response. Output capacitors in the range of 1 μF to 1000 μF of aluminum or tantalum electrolytic are commonly used to provide improved output impedance and rejection of transients.

$$\dagger\dagger V_{OUT} = 1.25V \left(1 + \frac{R2}{R1}\right) + I_{ADJ}(R_2)$$

Figure 18. 1.25-V to 25-V Adjustable Regulator

9.2.1.1 Design Requirements

The device component count is very minimal, employing two resistors as part of a voltage-divider circuit and an output capacitor for load regulation. An input capacitor is needed if the device is more than 6 inches from filter capacitors. An optional bypass capacitor across R2 can also be used to improve PSRR.

9.2.1.2 Detailed Design Procedure

The output voltage is set based on the selection of the two resistors, R1 and R2, as shown in Figure 18. For details on capacitor selection, refer to *External Capacitors*.

Copyright © 2015, Texas Instruments Incorporated

Typical Applications (continued)

9.2.1.3 Application Curve

As shown in Figure 19, V_{OUT} will rise with V_{IN} minus some dropout voltage. This dropout voltage during startup will vary with R_{OUT}.

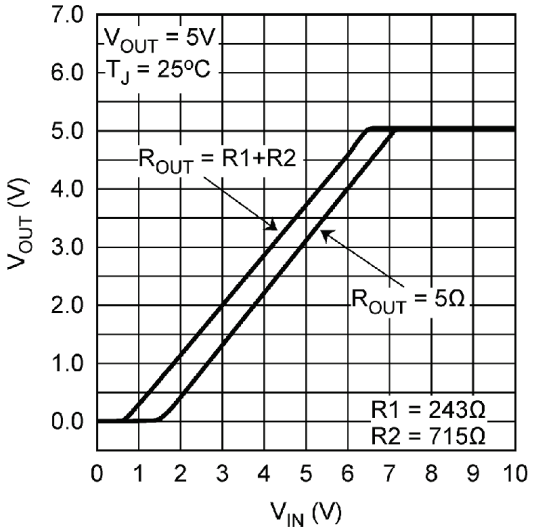

Figure 19. V_{OUT} vs V_{IN}, V_{OUT} = 5 V

9.2.2 5-V Logic Regulator With Electronic Shutdown

Figure 20 shows a variation of the 5-V output regulator application uses the LM317A, along with an NPN transistor, to provide shutdown control. The NPN will either block or sink the current from the ADJ pin by responding to the TTL pin logic. When TTL is pulled high, the NPN is on and pulls the ADJ pin to GND, and the LM317A outputs about 1.25 V. When TTL is pulled low, the NPN is off and the regulator outputs according to the programmed adjustable voltage.

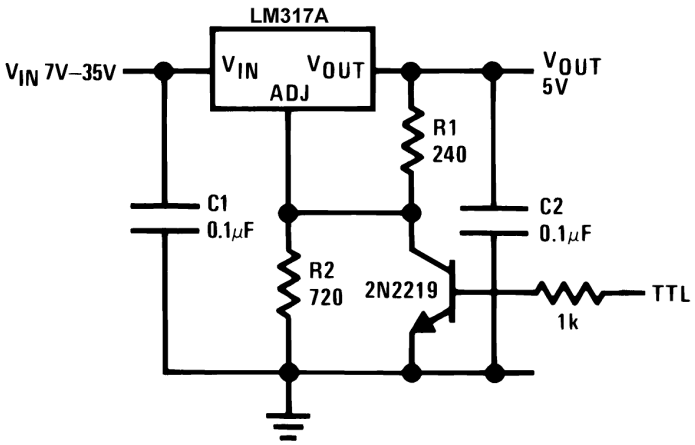

NOTE: * Min. output ≅ 1.25 V

Figure 20. 5-V Logic Regulator With Electronic Shutdown

Typical Applications (continued)

9.2.3 Slow Turnon 15-V Regulator

An application of LM317A includes a PNP transistor with a capacitor to implement slow turnon functionality (see Figure 21). As V_{IN} rises, the PNP sinks current from the ADJ rail. The output voltage at start up is the addition of the 1.25-V reference plus the drop across the base to emitter. While this is happening, the capacitor begins to charge and eventually opens the PNP. At this point, the device functions normally, regulating the output at 15 V. A diode is placed between C1 and V_{OUT} to provide a path for the capacitor to discharge. Such controlled turnon is useful for limiting the in-rush current.

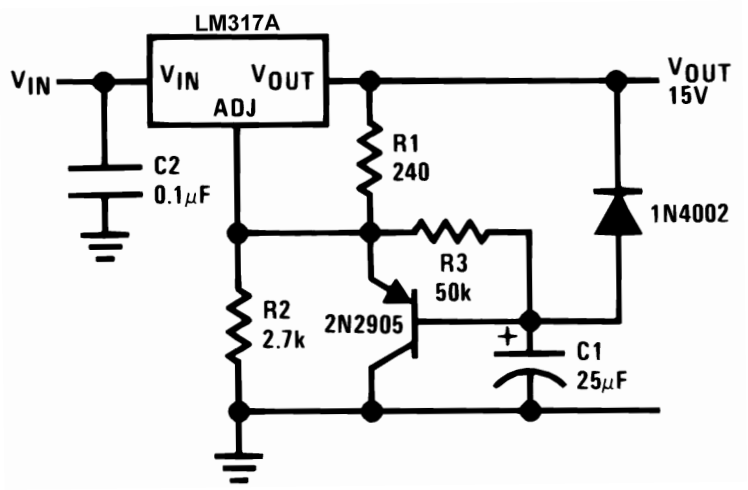

Figure 21. Slow Turnon 15-V Regulator

9.2.4 Adjustable Regulator With Improved Ripple Rejection

To improve ripple rejection, a capacitor is used to bypass the ADJ pin to GND (see Figure 22). This is used to smooth output ripple by cleaning the feedback path and stopping unnecessary noise from being fed back into the device, propagating the noise.

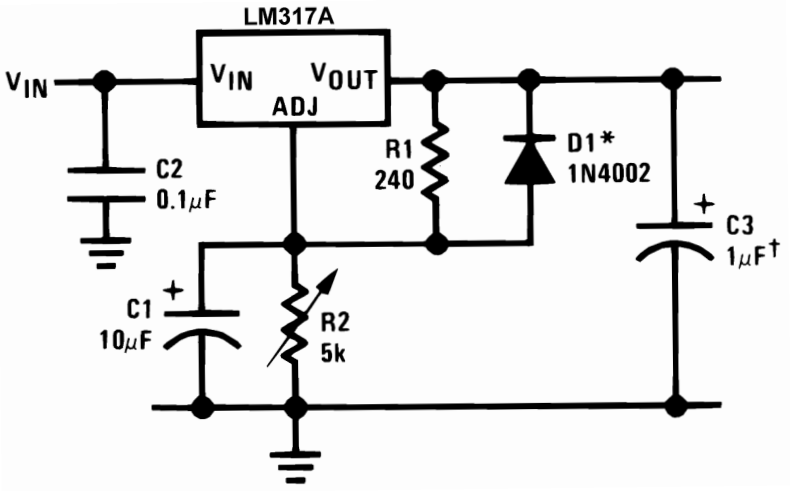

NOTE: †Solid tantalum
*Discharges C1 if output is shorted to ground

Figure 22. Adjustable Regulator With Improved Ripple Rejection

Copyright © 2015, Texas Instruments Incorporated

Typical Applications (continued)

9.2.5 High-Stability 10-V Regulator

Using a high-stability shunt voltage reference in the feedback path, such as the LM329, provides damping necessary for a stable, low noise output (see Figure 23).

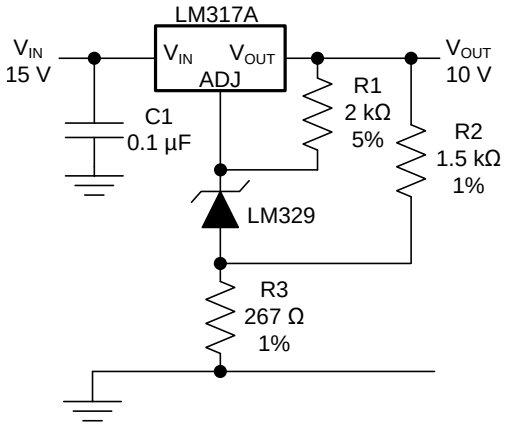

Figure 23. High-Stability 10-V Regulator

9.2.6 High-Current Adjustable Regulator

Using the LM195 power transistor in parallel with the LM317A can increase the maximum possible output load current (see Figure 24). Sense resistor R1 provides the 0.6 V across base to emitter to turn on the PNP. This on switch allows current to flow, and the voltage drop across R3 drives three LM195 power transistors designed to carry an excess of 1 A each.

NOTE

The selection of R1 determines a minimum load current for the PNP to turn on. The higher the resistor value, the lower the load current must be before the transistors turn on.

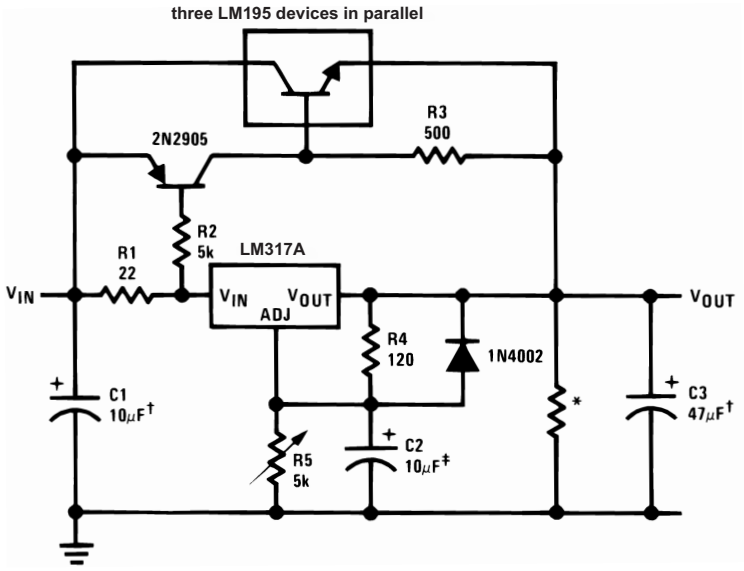

NOTE: ‡Optional—improves ripple rejection
†Solid tantalum
*Minimum load current = 30 mA

Figure 24. High-Current Adjustable Regulator

Typical Applications (continued)

9.2.7 Emitter-Follower Current Amplifier

The LM317A is used as a constant-current source in the emitter-follower circuit (see Figure 25). The LM195 power transistor is being used as a current-gain amplifier, boosting the INPUT current. The LM317A provides a more stable current bias than a current bias from a system using only a resistor.

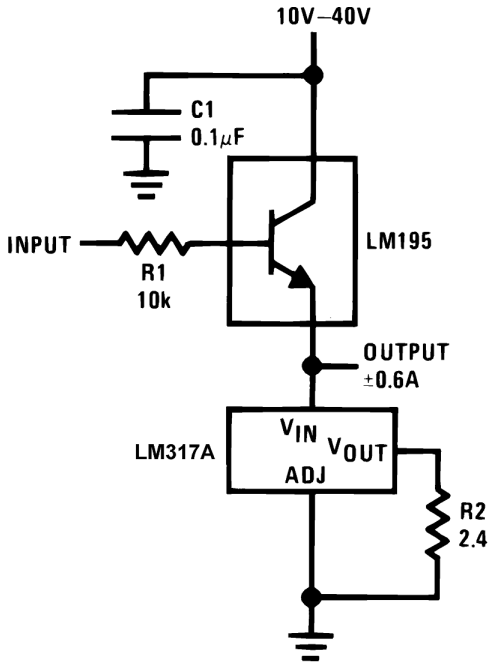

Figure 25. Emitter-Follower Current Amplifier

Copyright © 2015, Texas Instruments Incorporated

Typical Applications (continued)

9.2.8 1-A Current Regulator

A simple, fixed-current regulator can be made by placing a resistor between the V_{OUT} and ADJ pins of the LM317A (see Figure 26). By regulating a constant 1.25 V between these two terminals, a constant current is delivered to the load.

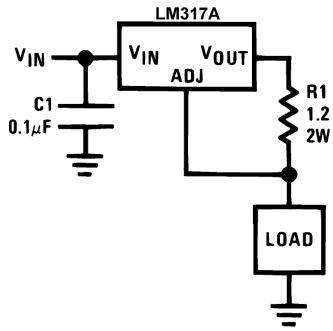

Figure 26. 1-A Current Regulator

9.2.9 Common-Emitter Amplifier

Sometimes it is necessary to use a power transistor for high current gain. In this case, the LM317A provides constant current at the collector of the LM195 in this common emitter application (see Figure 27). The 1.25-V reference between V_{OUT} and ADJ is maintained across the 2.4-Ω resistor, providing about 500-mA constant bias current into the collector of the LM195.

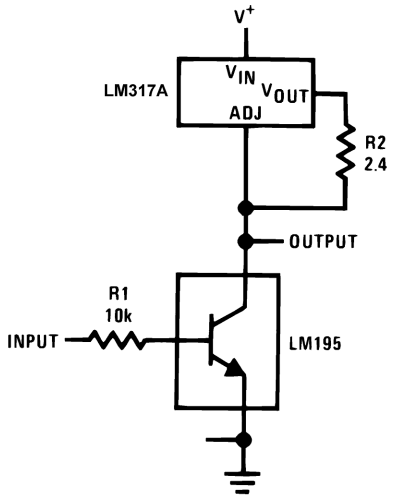

Figure 27. Common-Emitter Amplifier

Typical Applications (continued)

9.2.10 Low-Cost 3-A Switching Regulator

The LM317A can be used in a switching buck regulator application in cost sensitive applications that require high efficiency. The switch node above D1 oscillates between ground and VIN, as the voltage across sense resistor R1 drives the power transistor on and off. Figure 28 exhibits self-oscillating behavior by negative feedback through R6 and C3 to the ADJ pin of the LM317A.

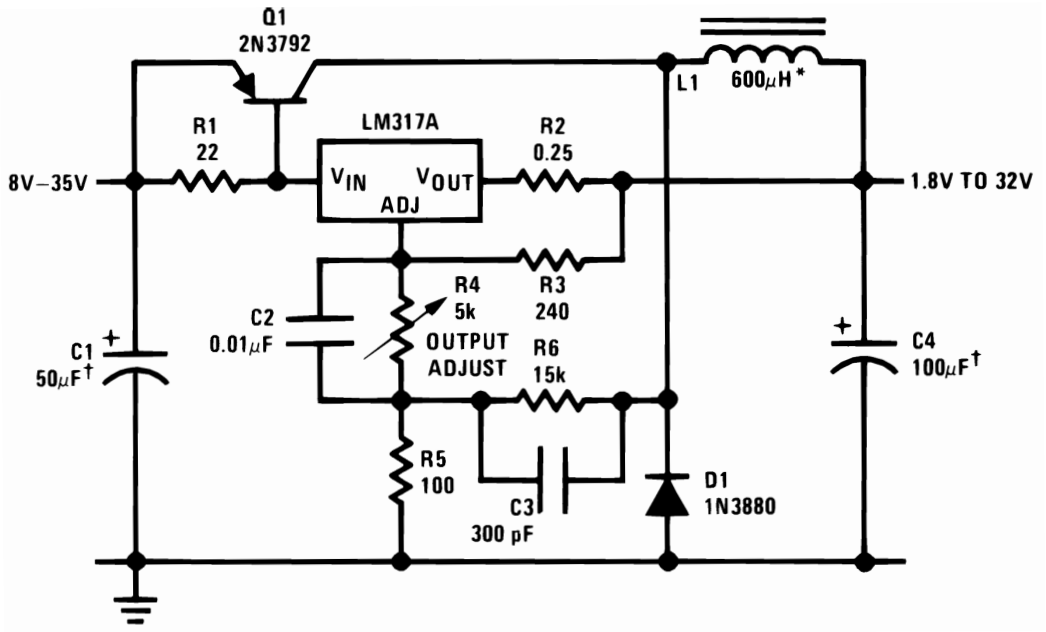

NOTE: †Solid tantalum
*Core—Arnold A-254168-2 60 turns

Figure 28. Low-Cost 3-A Switching Regulator

Copyright © 2015, Texas Instruments Incorporated

Typical Applications (continued)

9.2.11 Current-Limited Voltage Regulator

A maximum limit on output current can be set using Figure 29. The load current travels through R3 and R4. As the load current increases, the voltage drop across R3 increases until the NPN transistor is driven, during which the ADJ pin is pulled down to ground and the output voltage is pulled down to the reference voltage of 1.25 V.

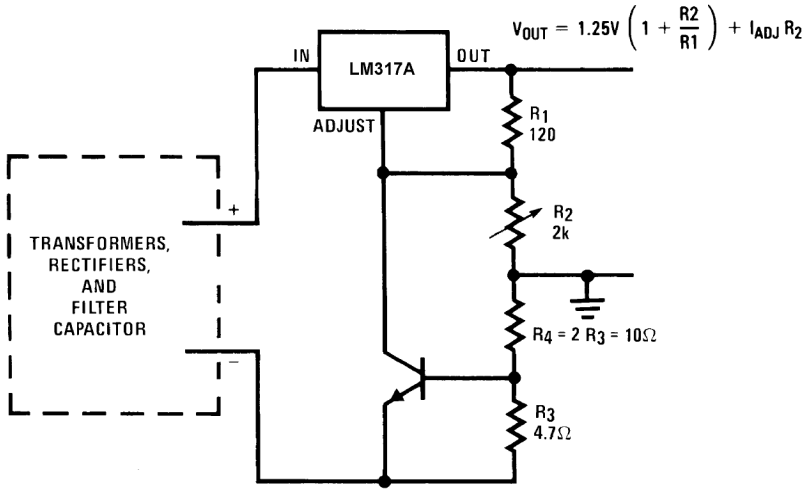

–*Short circuit current is approximately* $\frac{600\ mV}{R3}$*, or 210 mA*

(Compared to LM117's higher current limit)

—At 50 mA output only ¾ volt of drop occurs in R_3 and R_4

Figure 29. Current-Limited Voltage Regulator

9.2.12 Adjusting Multiple On-Card Regulators With Single Control

Figure 30 shows how multiple LM317A regulators can be controlled by setting one resistor. Because each device maintains the reference voltage of about 1.25 V between its V_{OUT} and ADJ pins, we can connect each ADJ rail to a single resistor, setting the same output voltage across all devices. This allows for independent outputs, each responding to its corresponding input only. Designers must also consider that by the nature of the circuit, changes to R1 and R2 will affect all regulators.

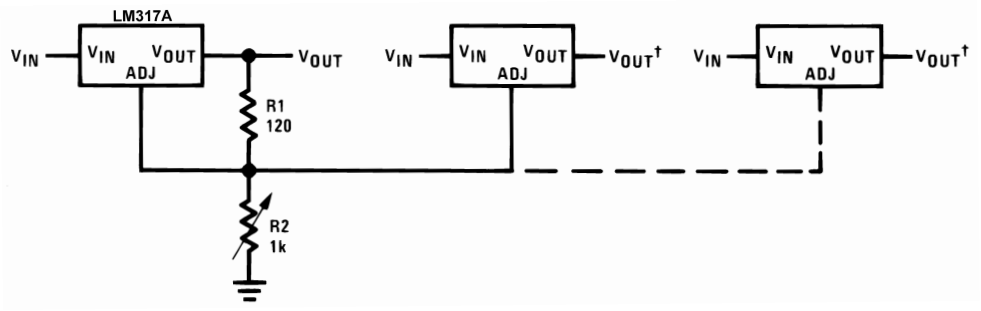

NOTE: *All outputs within ±100 mV
†Minimum load—10 mA

Figure 30. Adjusting Multiple On-Card Regulators With Single Control

Typical Applications (continued)

9.2.13 AC Voltage Regulator

In Figure 31, the top regulator is 6 V above the bottom regulator. It is clear that when the input rises above 6 V plus the dropout voltage, only the top LM317A regulates 6 V at the output. When the input falls below –6 V minus the dropout voltage, only the bottom LM317A regulates –6 V at the output. For regions where the output is not clipped, there is no regulation taking place, so the output follows the input.

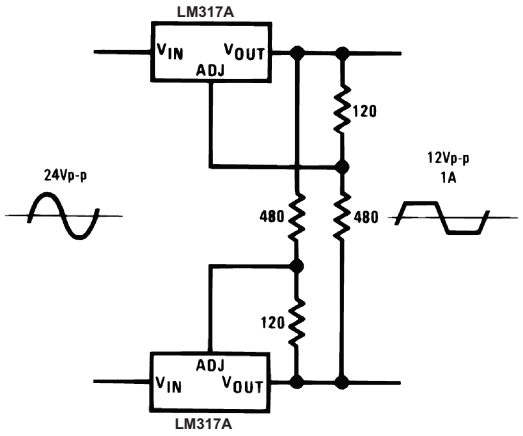

Figure 31. AC Voltage Regulator

9.2.14 12-V Battery Charger

The LM317A can be used in a battery charger application shown in Figure 32, where the device maintains either constant voltage or constant current mode depending on the current charge of the battery. To do this, the part senses the voltage drop across the battery and delivers the maximum charging current necessary to charge the battery. When the battery charge is low, there exists a voltage drop across the sense resistor R_S, providing constant current to the battery at that instant. As the battery approaches full charge, the potential drop across R_S approaches zero, reducing the current and maintaining the fixed voltage of the battery.

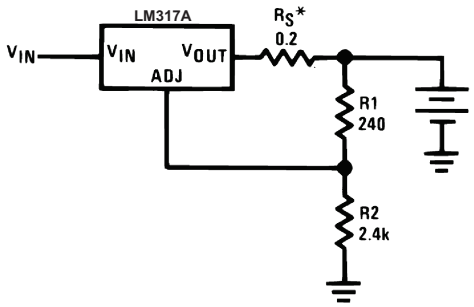

*R_S—sets output impedance of charger: $Z_{OUT} = R_S \left(1 + \frac{R2}{R1}\right)$

Use of R_S allows low charging rates with fully charged battery.

Figure 32. 12-V Battery Charger

Copyright © 2015, Texas Instruments Incorporated

Typical Applications (continued)

9.2.15 Adjustable 4-A Regulator

Using three LM317A devices in parallel increases load-current capability (see Figure 33). Output voltage is set by the variable resistor tied to the noninverting terminal of the operational amplifier, and reference current to the transistor is developed across the 100-Ω resistor. When output voltage rises, the operational amplifier corrects by drawing current from the base, closing the transistor. This effectively pulls ADJ down and lowers the output voltage through negative feedback.

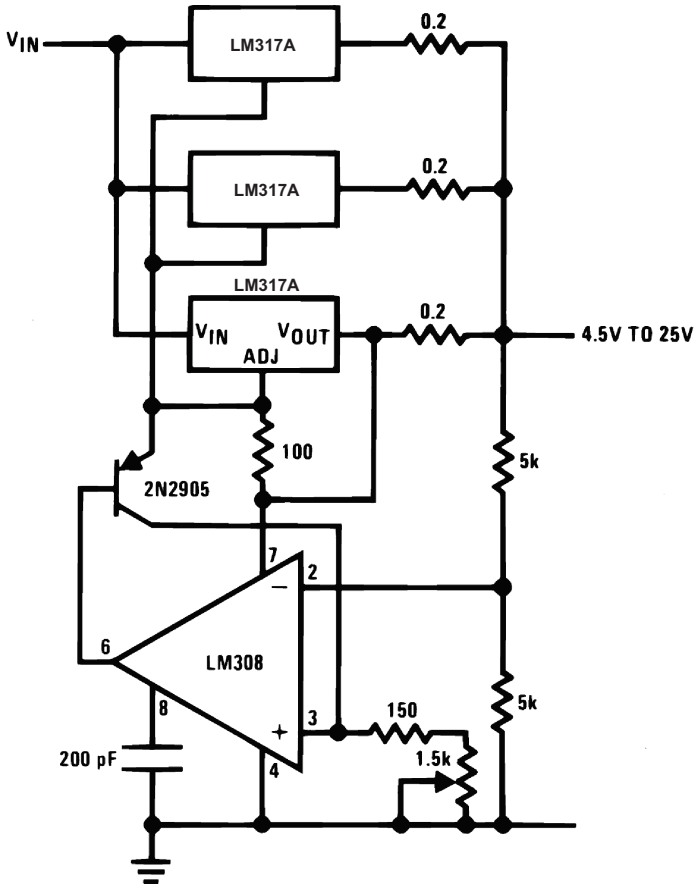

Figure 33. Adjustable 4-A Regulator

Typical Applications (continued)

9.2.16 Current-Limited 6-V Charger

The current in a battery charger application is limited by switching between constant current and constant voltage states (see Figure 34). When the battery pulls low current, the drop across the 1 Ω resistor is not substantial and the NPN remains off. A constant voltage is seen across the battery, as regulated by the resistor divider. When current through the battery rises past peak current, the 1 Ω provides enough voltage to turn the transistor on, pulling ADJ close to ground. This results in limiting the maximum current to the battery.

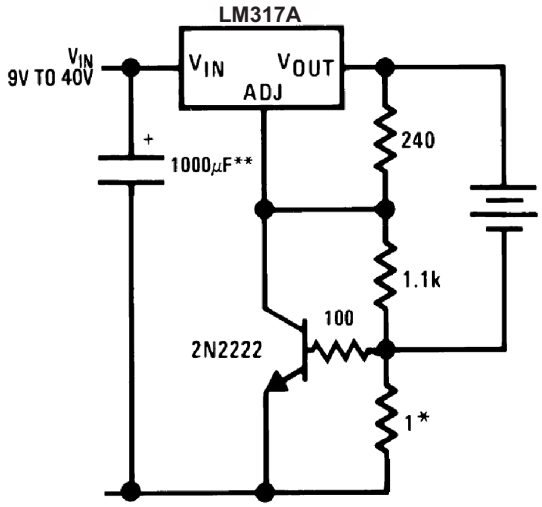

NOTE: *Sets peak current (0.6A for 1Ω)
**The 1000-μF is recommended to filter out input transients

Figure 34. Current-Limited 6-V Charger

9.2.17 Digitally-Selected Outputs

Figure 35 demonstrates a digitally-selectable output voltage. In its default state, all transistors are off and the output voltage is set based on R1 and R2. By driving certain transistors, the associated resistor is connected in parallel to R2, modifying the output voltage of the regulator.

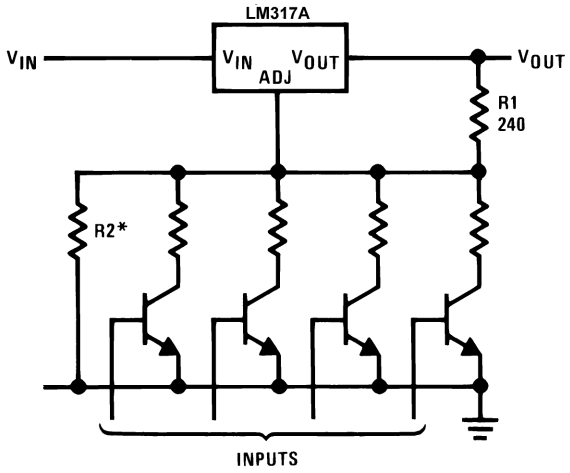

NOTE: *Sets maximum V_{OUT}

Figure 35. Digitally-Selected Outputs

Copyright © 2015, Texas Instruments Incorporated

10 Power Supply Recommendations

The input supply to the LM317A should be kept at a voltage level lower than the maximum input-to-output differential voltage of 40 V. When possible, the minimum dropout voltage should also be met with extra headroom to keep the LM317A in regulation. TI recommends the use of an input capacitor, especially when the input pin is located more than 6 inches away from the power supply source. For more information regarding capacitor selection, refer to *External Capacitors*.

11 Layout

11.1 Layout Guidelines

Some layout guidelines should be followed to ensure proper regulation of the output voltage with minimum noise. Traces carrying the load current should be wide to reduce the amount of parasitic trace inductance and the feedback loop from V_{OUT} to ADJ should be kept as short as possible. To improve PSRR, a bypass capacitor can be placed at the ADJ pin and should be located as close as possible to the IC. In cases when V_{IN} shorts to ground, an external diode should be placed from V_{OUT} to V_{IN} to divert the surge current from the output capacitor and protect the IC. Similarly, in cases when a large bypass capacitor is placed at the ADJ pin and V_{OUT} shorts to ground, an external diode should be placed from ADJ to V_{OUT} to provide a path for the bypass capacitor to discharge. These diodes should be placed close to the corresponding IC pins to increase their effectiveness.

11.2 Layout Examples

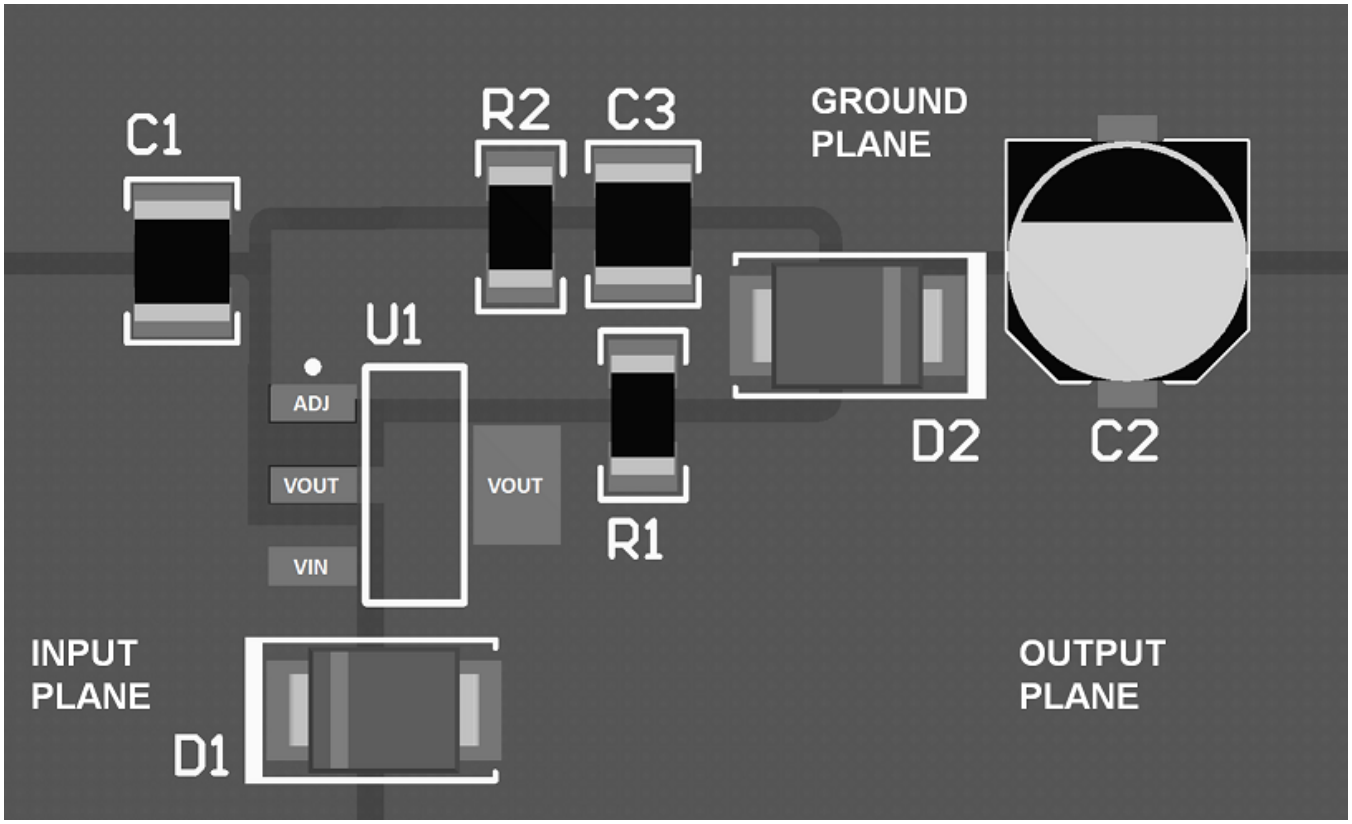

Figure 36. Layout Example (SOT-223)

Layout Examples (continued)

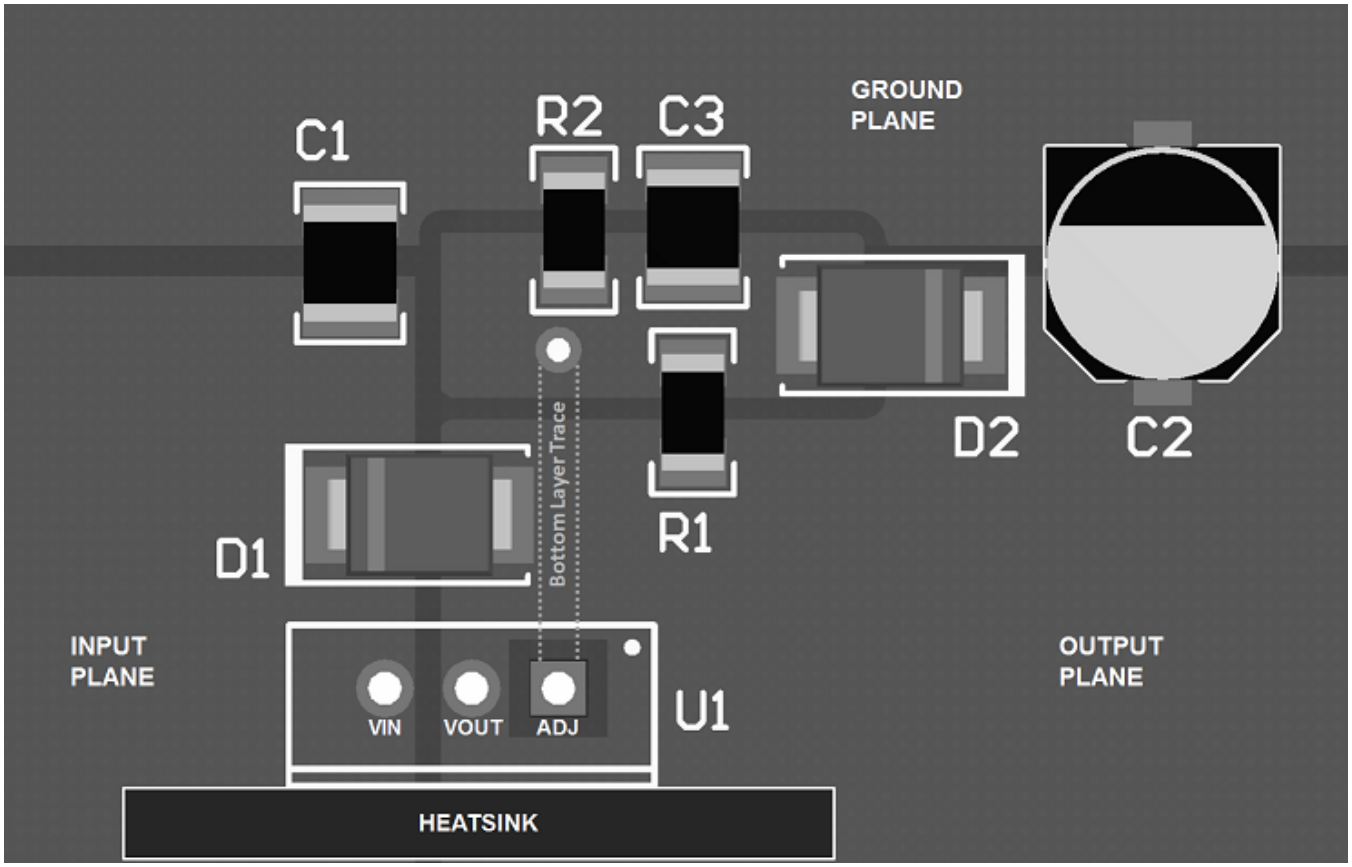

Figure 37. Layout Example (TO-220)

11.3 Thermal Considerations

11.3.1 Heatsink Requirements

The LM317A regulators have internal thermal shutdown to protect the device from over-heating. Under all operating conditions, the junction temperature of the LM317A should not exceed the rated maximum junction temperature (T_J) of 125°C. A heatsink may be required depending on the maximum device power dissipation and the maximum ambient temperature of the application. To determine if a heatsink is needed, the power dissipated by the regulator, P_D, must be calculated by Equation 2:

$$P_D = ((V_{IN} - V_{OUT}) \times I_L) + (V_{IN} \times I_G) \quad (2)$$

Figure 38 shows the voltage and currents which are present in the circuit.

The next parameter which must be calculated is the maximum allowable temperature rise, $T_{R(MAX)}$ in Equation 3:

$$T_{R(MAX)} = T_{J(MAX)} - T_{A(MAX)}$$

where

- $T_{J(MAX)}$ is the maximum allowable junction temperature (125°C for the LM317A),
- and $T_{A(MAX)}$ is the maximum ambient temperature that will be encountered in the application. (3)

Using the calculated values for $T_{R(MAX)}$ and P_D, the maximum allowable value for the junction-to-ambient thermal resistance (θ_{JA}) can be calculated by Equation 4:

$$\theta_{JA} = (T_{R(MAX)} / P_D) \quad (4)$$

Copyright © 2015, Texas Instruments Incorporated

Thermal Considerations (continued)

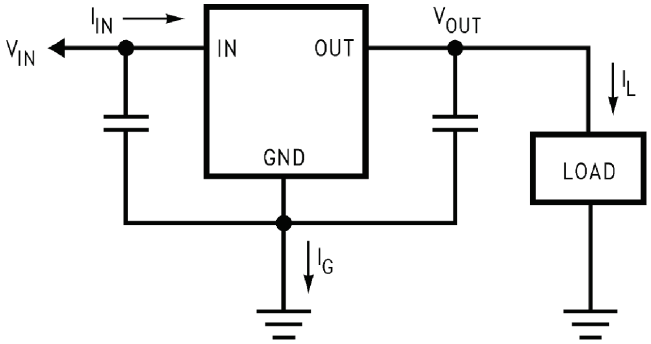

Figure 38. Power Dissipation Diagram

If the calculated maximum allowable thermal resistance is higher than the actual package rating, then no additional work is needed. If the calculated maximum allowable thermal resistance is lower than the actual package rating, either the power dissipation (P_D) needs to be reduced, the maximum ambient temperature $T_{A(MAX)}$ needs to be reduced, the thermal resistance (θ_{JA}) must be lowered by adding a heatsink, or some combination of these measures should be implemented.

If a heatsink is needed, the value can be calculated from Equation 5:

$$\theta_{HA} \leq (\theta_{JA} - (\theta_{CH} + \theta_{JC})) \quad (5)$$

where

- θ_{CH} is the thermal resistance of the contact area between the device case and the heatsink surface
- θ_{JC} is thermal resistance from the junction of the die to surface of the package case

When a value for θ_{HA} is found using the equation shown, a heatsink must be selected that has a value that is less than or equal to this number.

The θ_{HA} rating is specified numerically by the heatsink manufacturer in the catalog, or shown in a curve that plots temperature rise vs power dissipation for the heatsink.

11.3.2 Heatsinking Surface Mount Packages

The SOT-223 (DCY) and TO-252 (NDP) packages use a copper plane on the PCB and the PCB itself as a heatsink. To optimize the heat-sinking ability of the plane and PCB, solder the tab of the package to the plane.

11.3.2.1 Heatsinking the SOT-223 (DCY) Package

Figure 39 and Figure 40 show the information for the SOT-223 package. Figure 40 assumes a θ_{JA} of 74°C/W for 1-oz. copper and 59.6°C/W for 2-oz. copper and a maximum junction temperature of 125°C. See AN-1028 (SNVA036) for thermal enhancement techniques to be used with SOT-223 and TO-252 packages.

Copyright © 2015, Texas Instruments Incorporated

Thermal Considerations (continued)

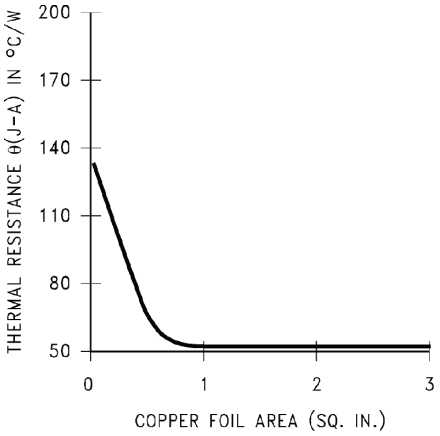

Figure 39. θ_{JA} vs Copper (2-oz.) Area for the SOT-223 Package

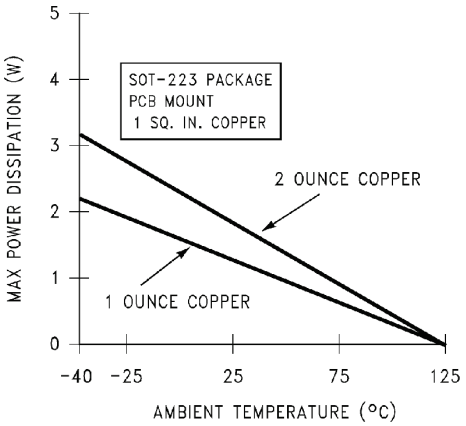

Figure 40. Maximum Power Dissipation vs T_{AMB} for the SOT-223 Package

11.3.2.2 Heatsinking the TO-252 (NDP) Package

If the maximum allowable value for θ_{JA} is found to be ≥54°C/W (typical rated value) for the TO-252 package, no heatsink is needed because the package alone will dissipate enough heat to satisfy these requirements. If the calculated value for θ_{JA} falls below these limits, a heatsink is required.

As a design aid, Table 2 shows the value of the θ_{JA} of NDP the package for different heatsink area. The copper patterns that we used to measure these θ_{JA}s are shown in Figure 45. Figure 41 reflects the same test results as what are in Table 2.

Figure 42 shows the maximum allowable power dissipation versus ambient temperature for the TO-252 device. Figure 43 shows the maximum allowable power dissipation versus copper area (in^2) for the TO-252 device. See AN-1028 (SNVA036) for thermal enhancement techniques to be used with SOT-223 and TO-252 packages.

Copyright © 2015, Texas Instruments Incorporated

Thermal Considerations (continued)

Table 2. θ_{JA} Different Heatsink Area

Layout	Copper Area		Thermal Resistance
	Top Side (in^2)(1)	Bottom Side (in^2)	(θ_{JA}°C/W) TO-252
1	0.0123	0	103
2	0.066	0	87
3	0.3	0	60
4	0.53	0	54
5	0.76	0	52
6	1	0	47
7	0.066	0.2	84
8	0.066	0.4	70
9	0.066	0.6	63
10	0.066	0.8	57
11	0.066	1	57
12	0.066	0.066	89
13	0.175	0.175	72
14	0.284	0.284	61
15	0.392	0.392	55
16	0.5	0.5	53

(1) Tab of device attached to topside of copper.

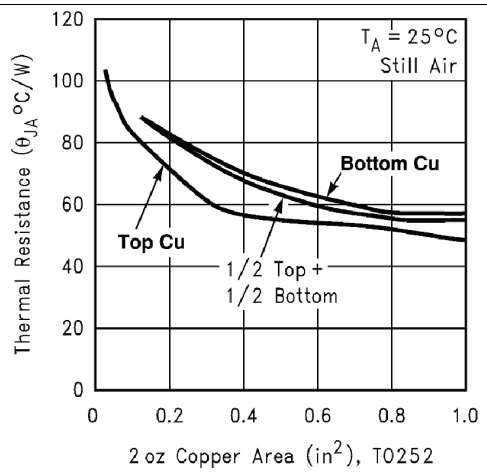

Figure 41. θ_{JA} vs 2-oz. Copper Area for TO-252

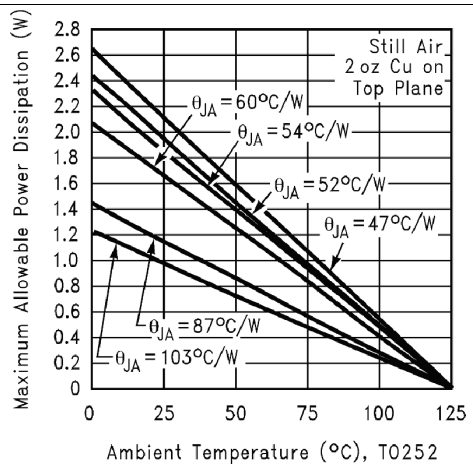

Figure 42. Maximum Allowable Power Dissipation vs Ambient Temperature for TO-252

Copyright © 2015, Texas Instruments Incorporated

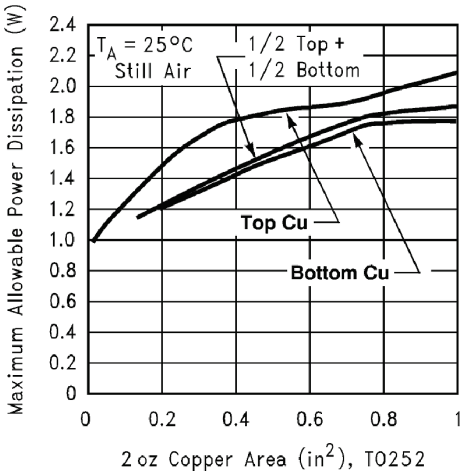

Figure 43. Maximum Allowable Power Dissipation vs 2-oz. Copper Area for TO-252

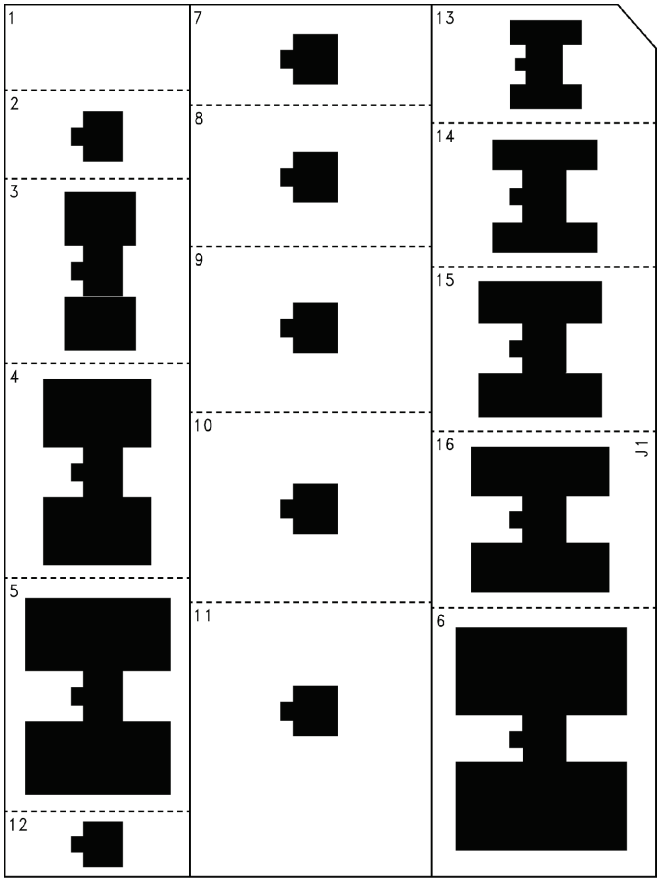

Figure 44. Top View of the Thermal Test Pattern in Actual Scale

Copyright © 2015, Texas Instruments Incorporated

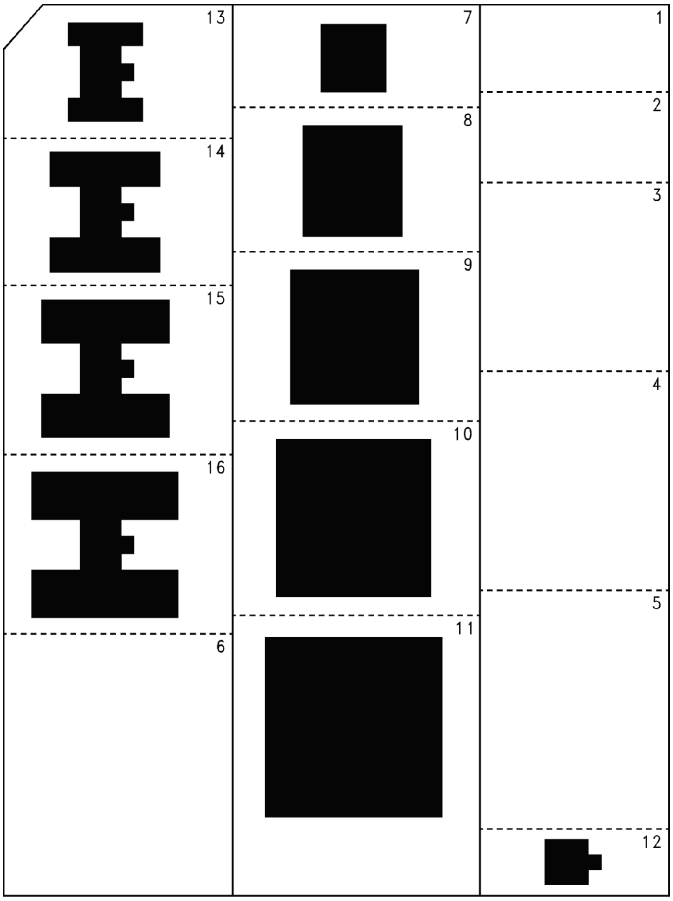

Figure 45. Bottom View of the Thermal Test Pattern in Actual Scale

12 Device and Documentation Support

12.1 Documentation Support

12.1.1 Related Documentation

- For applications requiring greater output current, see LM150 series (3A) (SNVS772) and LM138 series (5A) (SNVS771) data sheets.
- For the negative complement, see LM137 (SNVS778) series data sheet.
- For thermal enhancement techniques to be used with SOT-223 and TO-252 packages, see AN-1028, *Maximum Power Enhancement Techniques for Power Packages* (SNVA036).

12.2 Community Resources

The following links connect to TI community resources. Linked contents are provided "AS IS" by the respective contributors. They do not constitute TI specifications and do not necessarily reflect TI's views; see TI's Terms of Use.

TI E2E™ Online Community ***TI's Engineer-to-Engineer (E2E) Community.*** Created to foster collaboration among engineers. At e2e.ti.com, you can ask questions, share knowledge, explore ideas and help solve problems with fellow engineers.

Design Support ***TI's Design Support*** Quickly find helpful E2E forums along with design support tools and contact information for technical support.

12.3 Trademarks

E2E is a trademark of Texas Instruments.
All other trademarks are the property of their respective owners.

12.4 Electrostatic Discharge Caution



These devices have limited built-in ESD protection. The leads should be shorted together or the device placed in conductive foam during storage or handling to prevent electrostatic damage to the MOS gates.

12.5 Glossary

SLYZ022 — *TI Glossary*.

This glossary lists and explains terms, acronyms, and definitions.

13 Mechanical, Packaging, and Orderable Information

The following pages include mechanical, packaging, and orderable information. This information is the most current data available for the designated devices. This data is subject to change without notice and revision of this document. For browser-based versions of this data sheet, refer to the left-hand navigation.

Copyright © 2015, Texas Instruments Incorporated

PACKAGING INFORMATION

Orderable Device	Status (1)	Package Type	Package Drawing	Pins	Package Qty	Eco Plan (2)	Lead/Ball Finish (6)	MSL Peak Temp (3)	Op Temp (°C)	Device Marking (4/5)	Samples
LM317AEMP	NRND	SOT-223	DCY	4	1000	TBD	Call TI	Call TI	-40 to 125	N07A	
LM317AEMP/NOPB	ACTIVE	SOT-223	DCY	4	1000	Green (RoHS & no Sb/Br)	CU SN	Level-1-260C-UNLIM	-40 to 125	N07A	Samples
LM317AEMPX	NRND	SOT-223	DCY	4	2000	TBD	Call TI	Call TI		N07A	
LM317AEMPX/NOPB	ACTIVE	SOT-223	DCY	4	2000	Green (RoHS & no Sb/Br)	CU SN	Level-1-260C-UNLIM	-40 to 125	N07A	Samples
LM317AH	ACTIVE	TO	NDT	3	500	Green (RoHS & no Sb/Br)	AU | Call TI	Level-1-NA-UNLIM	-40 to 125	(LM317AHP+, LM317 AHP+)	Samples
LM317AMDT	NRND	TO-252	NDP	3	75	TBD	Call TI	Call TI	-40 to 125	LM317 AMDT	
LM317AMDT/NOPB	ACTIVE	TO-252	NDP	3	75	Green (RoHS & no Sb/Br)	CU SN	Level-2-260C-1 YEAR	-40 to 125	LM317 AMDT	Samples
LM317AMDTX	NRND	TO-252	NDP	3	2500	TBD	Call TI	Call TI	-40 to 125	LM317 AMDT	
LM317AMDTX/NOPB	ACTIVE	TO-252	NDP	3	2500	Green (RoHS & no Sb/Br)	CU SN	Level-2-260C-1 YEAR	-40 to 125	LM317 AMDT	Samples
LM317AT	NRND	TO-220	NDE	3	45	TBD	Call TI	Call TI	-40 to 125	LM317AT P+	
LM317AT/NOPB	ACTIVE	TO-220	NDE	3	45	Pb-Free (RoHS Exempt)	CU SN	Level-1-NA-UNLIM	-40 to 125	LM317AT P+	Samples

(1) The marketing status values are defined as follows:
ACTIVE: Product device recommended for new designs.
LIFEBUY: TI has announced that the device will be discontinued, and a lifetime-buy period is in effect.
NRND: Not recommended for new designs. Device is in production to support existing customers, but TI does not recommend using this part in a new design.
PREVIEW: Device has been announced but is not in production. Samples may or may not be available.
OBSOLETE: TI has discontinued the production of the device.

(2) **RoHS:** TI defines "RoHS" to mean semiconductor products that are compliant with the current EU RoHS requirements for all 10 RoHS substances, including the requirement that RoHS substance do not exceed 0.1% by weight in homogeneous materials. Where designed to be soldered at high temperatures, "RoHS" products are suitable for use in specified lead-free processes. TI may reference these types of products as "Pb-Free".
RoHS Exempt: TI defines "RoHS Exempt" to mean products that contain lead but are compliant with EU RoHS pursuant to a specific EU RoHS exemption.
Green: TI defines "Green" to mean the content of Chlorine (Cl) and Bromine (Br) based flame retardants meet JS709B low halogen requirements of <=1000ppm threshold. Antimony trioxide based flame retardants must also meet the <=1000ppm threshold requirement.

(3) MSL, Peak Temp. - The Moisture Sensitivity Level rating according to the JEDEC industry standard classifications, and peak solder temperature.

(4) There may be additional marking, which relates to the logo, the lot trace code information, or the environmental category on the device.

(5) Multiple Device Markings will be inside parentheses. Only one Device Marking contained in parentheses and separated by a "~" will appear on a device. If a line is indented then it is a continuation of the previous line and the two combined represent the entire Device Marking for that device.

(6) Lead/Ball Finish - Orderable Devices may have multiple material finish options. Finish options are separated by a vertical ruled line. Lead/Ball Finish values may wrap to two lines if the finish value exceeds the maximum column width.

Important Information and Disclaimer: The information provided on this page represents TI's knowledge and belief as of the date that it is provided. TI bases its knowledge and belief on information provided by third parties, and makes no representation or warranty as to the accuracy of such information. Efforts are underway to better integrate information from third parties. TI has taken and continues to take reasonable steps to provide representative and accurate information but may not have conducted destructive testing or chemical analysis on incoming materials and chemicals. TI and TI suppliers consider certain information to be proprietary, and thus CAS numbers and other limited information may not be available for release.

In no event shall TI's liability arising out of such information exceed the total purchase price of the TI part(s) at issue in this document sold by TI to Customer on an annual basis.

TAPE AND REEL INFORMATION

REEL DIMENSIONS

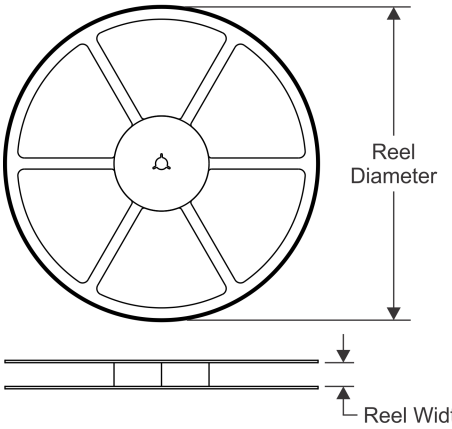

TAPE DIMENSIONS

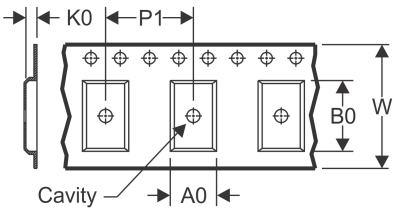

A0	Dimension designed to accommodate the component width
B0	Dimension designed to accommodate the component length
K0	Dimension designed to accommodate the component thickness
W	Overall width of the carrier tape
P1	Pitch between successive cavity centers

QUADRANT ASSIGNMENTS FOR PIN 1 ORIENTATION IN TAPE

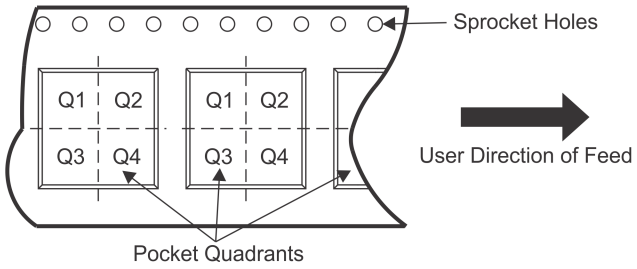

*All dimensions are nominal

Device	Package Type	Package Drawing	Pins	SPQ	Reel Diameter (mm)	Reel Width W1 (mm)	A0 (mm)	B0 (mm)	K0 (mm)	P1 (mm)	W (mm)	Pin1 Quadrant
LM317AEMP	SOT-223	DCY	4	1000	330.0	16.4	7.0	7.5	2.2	12.0	16.0	Q3
LM317AEMP/NOPB	SOT-223	DCY	4	1000	330.0	16.4	7.0	7.5	2.2	12.0	16.0	Q3
LM317AEMPX	SOT-223	DCY	4	2000	330.0	16.4	7.0	7.5	2.2	12.0	16.0	Q3
LM317AEMPX/NOPB	SOT-223	DCY	4	2000	330.0	16.4	7.0	7.5	2.2	12.0	16.0	Q3
LM317AMDTX	TO-252	NDP	3	2500	330.0	16.4	6.9	10.5	2.7	8.0	16.0	Q2
LM317AMDTX/NOPB	TO-252	NDP	3	2500	330.0	16.4	6.9	10.5	2.7	8.0	16.0	Q2

TAPE AND REEL BOX DIMENSIONS

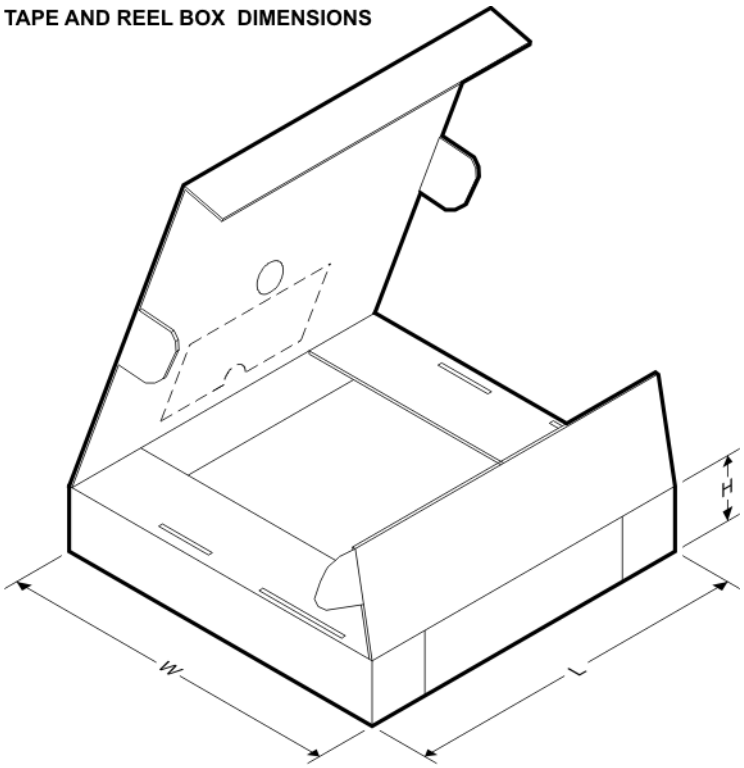

*All dimensions are nominal

Device	Package Type	Package Drawing	Pins	SPQ	Length (mm)	Width (mm)	Height (mm)
LM317AEMP	SOT-223	DCY	4	1000	367.0	367.0	35.0
LM317AEMP/NOPB	SOT-223	DCY	4	1000	367.0	367.0	35.0
LM317AEMPX	SOT-223	DCY	4	2000	367.0	367.0	35.0
LM317AEMPX/NOPB	SOT-223	DCY	4	2000	367.0	367.0	35.0
LM317AMDTX	TO-252	NDP	3	2500	367.0	367.0	35.0
LM317AMDTX/NOPB	TO-252	NDP	3	2500	367.0	367.0	38.0

NDE0003B

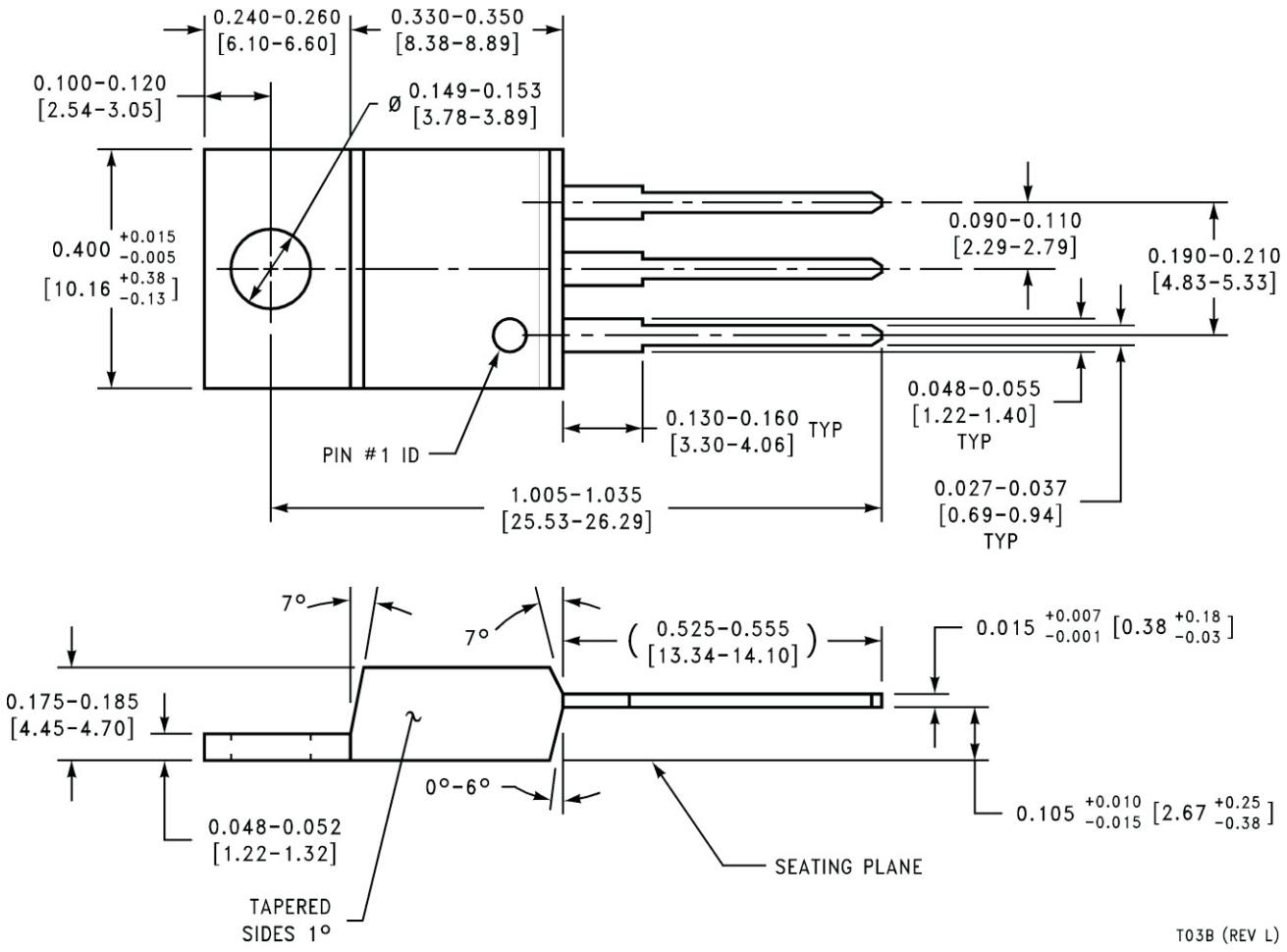
0.240-0.260
[6.10-6.60]
0.330-0.350
[8.38-8.89]
0.100-0.120
[2.54-3.05]
Ø 0.149-0.153
[3.78-3.89]
0.400 +0.015 -0.005
[10.16 +0.38 -0.13]
0.090-0.110
[2.29-2.79]
0.190-0.210
[4.83-5.33]
PIN #1 ID
0.130-0.160 TYP
[3.30-4.06]
0.048-0.055
[1.22-1.40]
TYP
1.005-1.035
[25.53-26.29]
0.027-0.037
[0.69-0.94]
TYP
7°
7°
(0.525-0.555
[13.34-14.10])
0.015 +0.007 -0.001 [0.38 +0.18 -0.03]
0.175-0.185
[4.45-4.70]
0°-6°
0.105 +0.010 -0.015 [2.67 +0.25 -0.38]
0.048-0.052
[1.22-1.32]
SEATING PLANE
TAPERED
SIDES 1°
T03B (REV L)

MPDS094A – APRIL 2001 – REVISED JUNE 2002

DCY (R-PDSO-G4) **PLASTIC SMALL-OUTLINE**

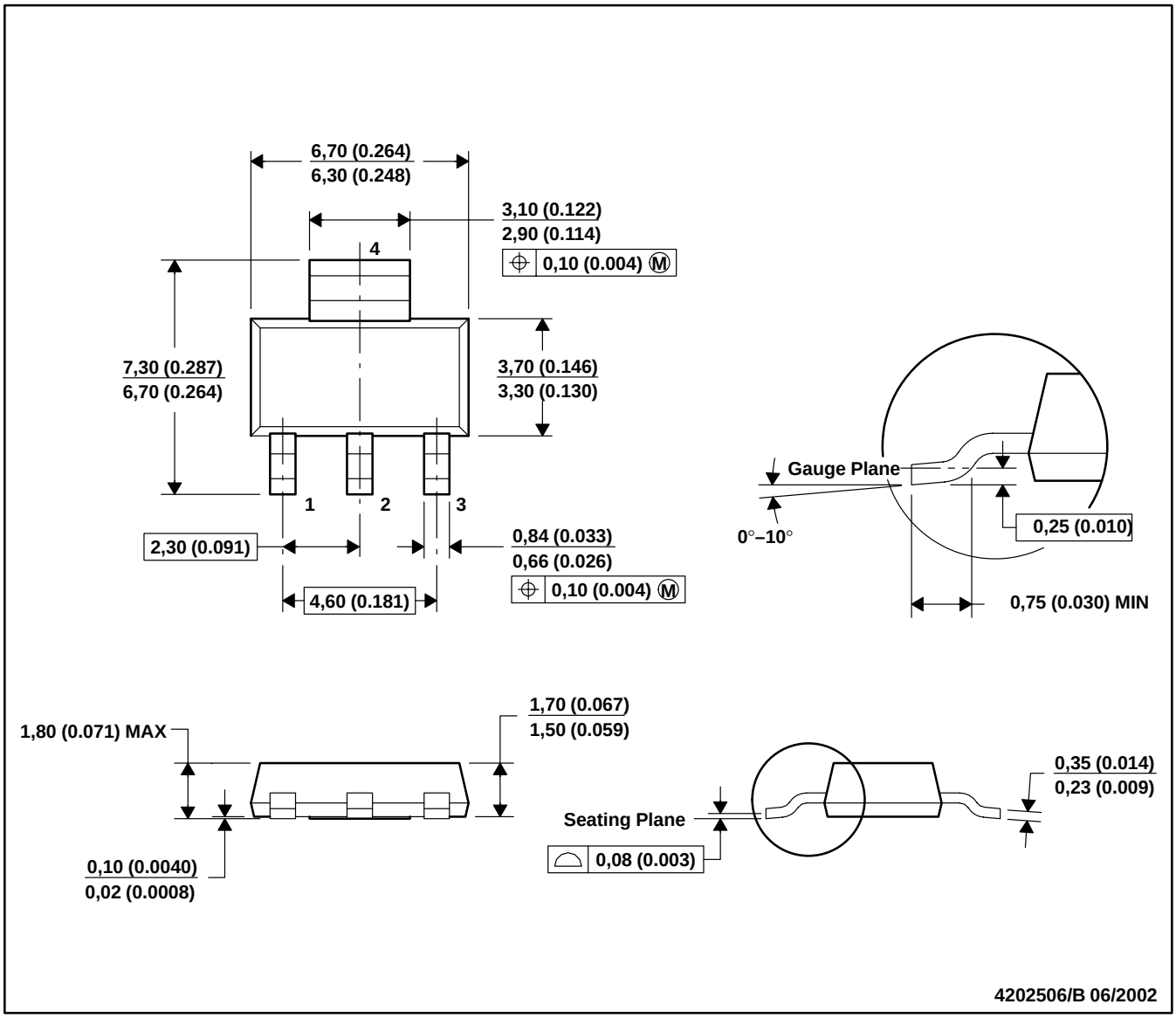

NOTES: A. All linear dimensions are in millimeters (inches).
B. This drawing is subject to change without notice.
C. Body dimensions do not include mold flash or protrusion.
D. Falls within JEDEC TO-261 Variation AA.

DCY (R–PDSO–G4) PLASTIC SMALL OUTLINE

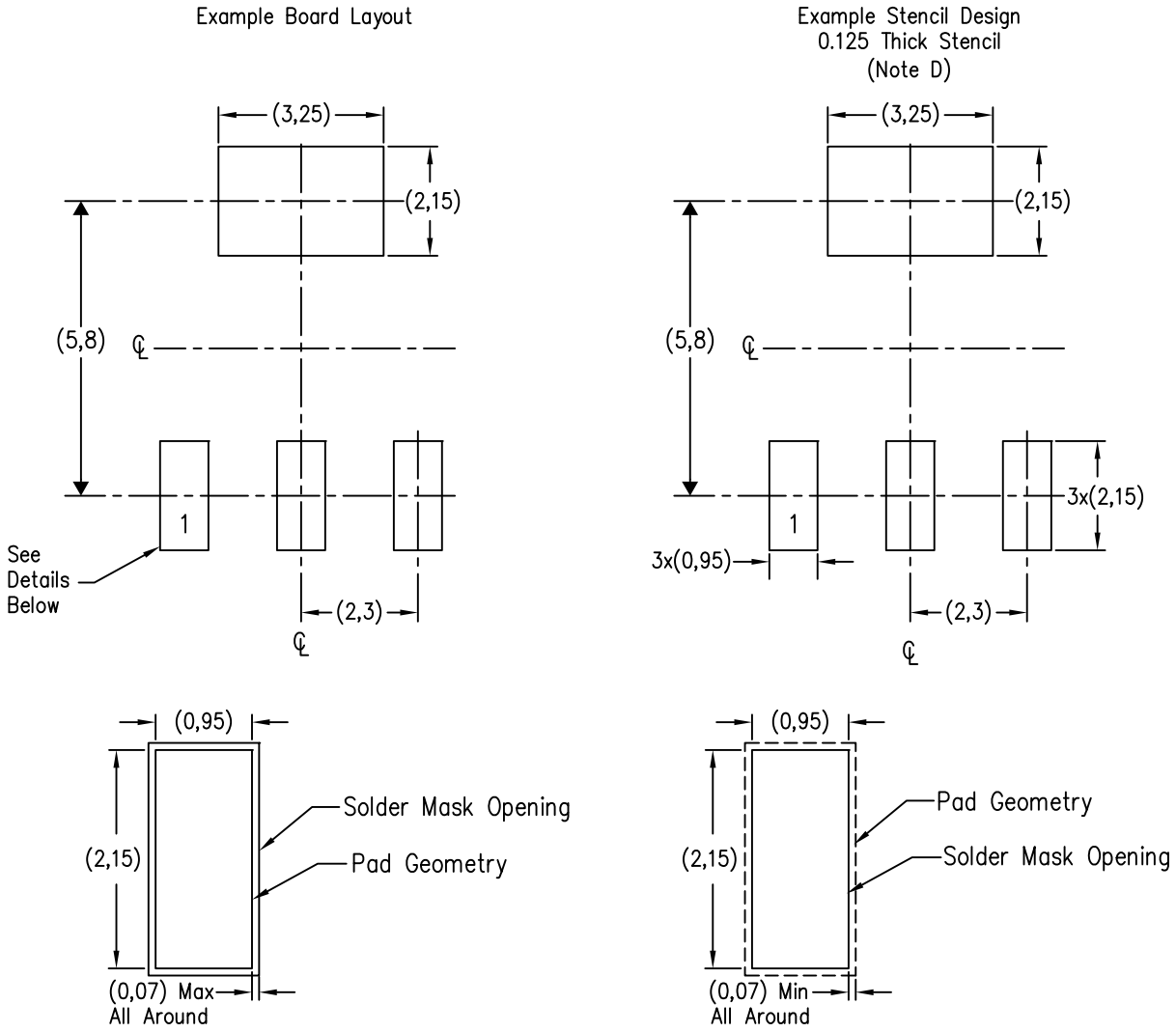

NOTES:

A. All linear dimensions are in millimeters.
B. This drawing is subject to change without notice.
C. Publication IPC–7351 is recommended for alternate designs.
D. Laser cutting apertures with trapezoidal walls and also rounding corners will offer better paste release. Customers should contact their board assembly site for stencil recommendations. Refer to IPC 7525 for stencil design considerations.

NDT0003A

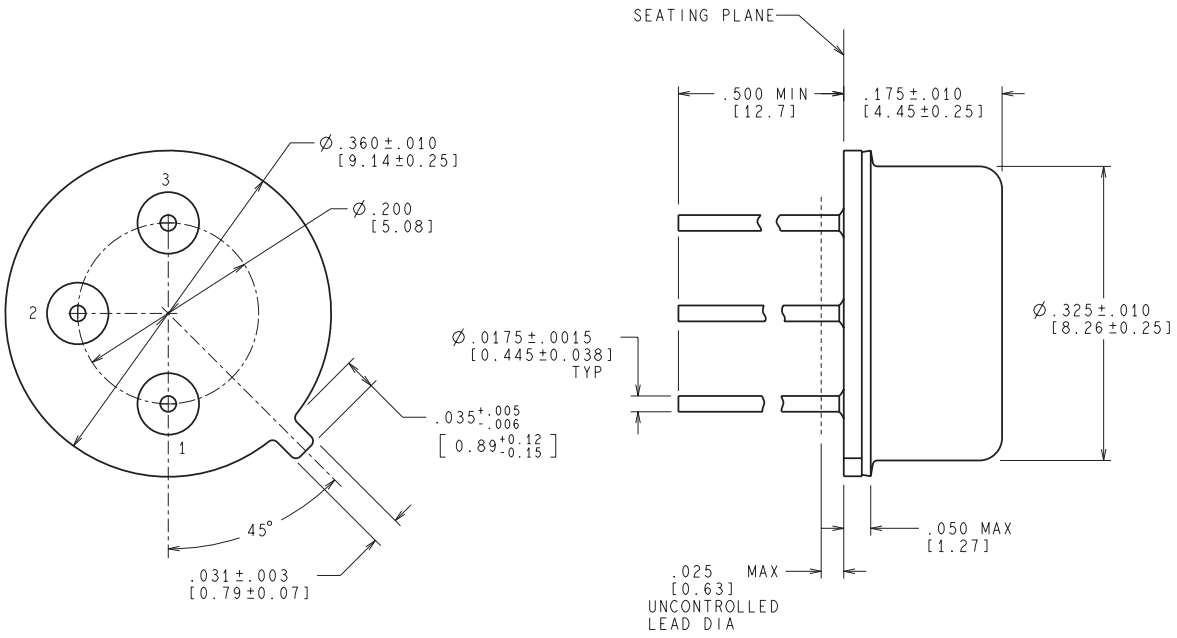

CONTROLLING DIMENSION IS INCH
VALUES IN [ ] ARE MILLIMETERS

MIL-PRF-38535
CONFIGURATION CONTROL

H03A (Rev D)

NDP0003B



PACKAGE OUTLINE

TO-252 - 2.55 mm max height

TRANSISTOR OUTLINE

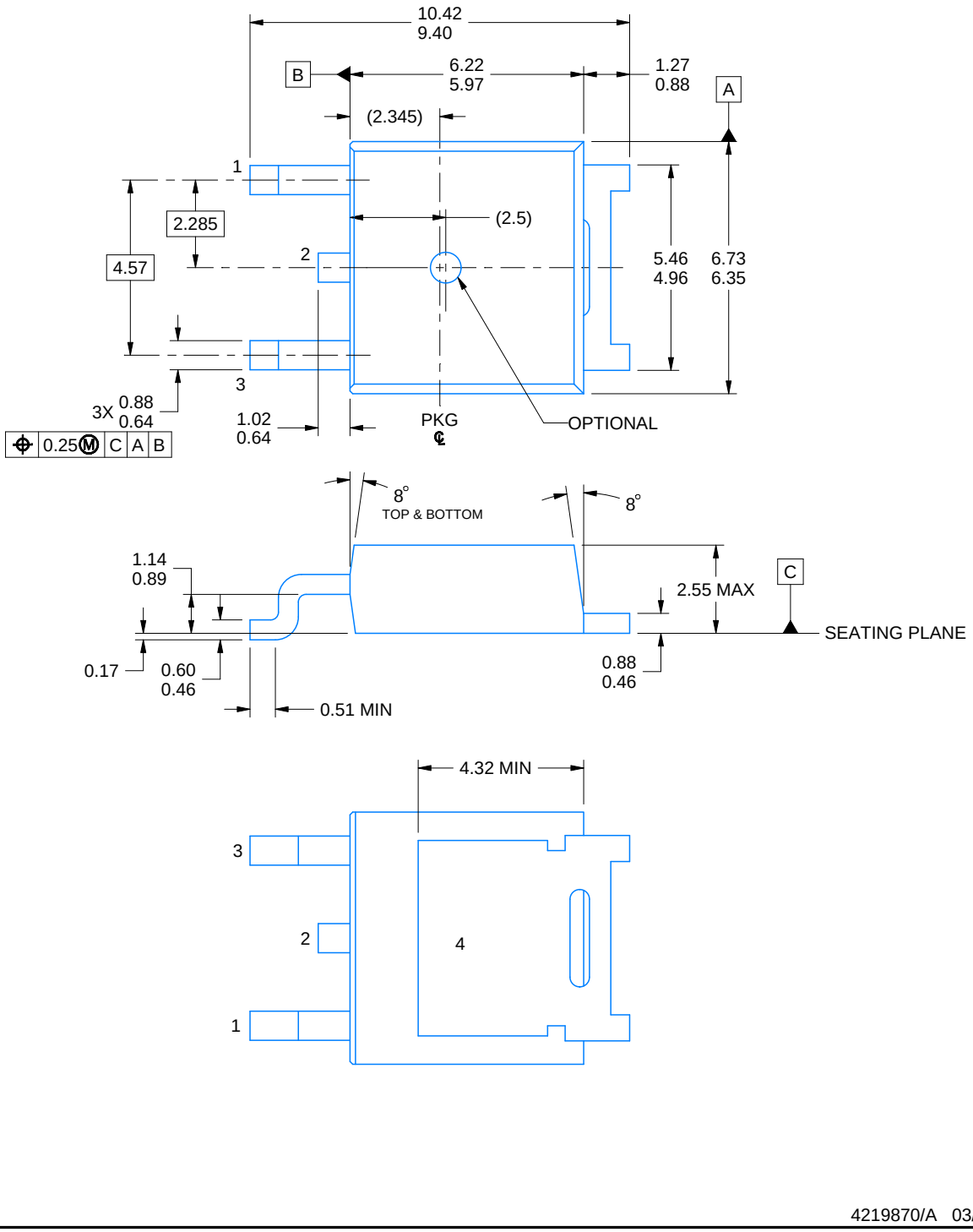

NOTES:

1. All linear dimensions are in millimeters. Any dimensions in parenthesis are for reference only. Dimensioning and tolerancing per ASME Y14.5M.
2. This drawing is subject to change without notice.
3. Reference JEDEC registration TO-252.

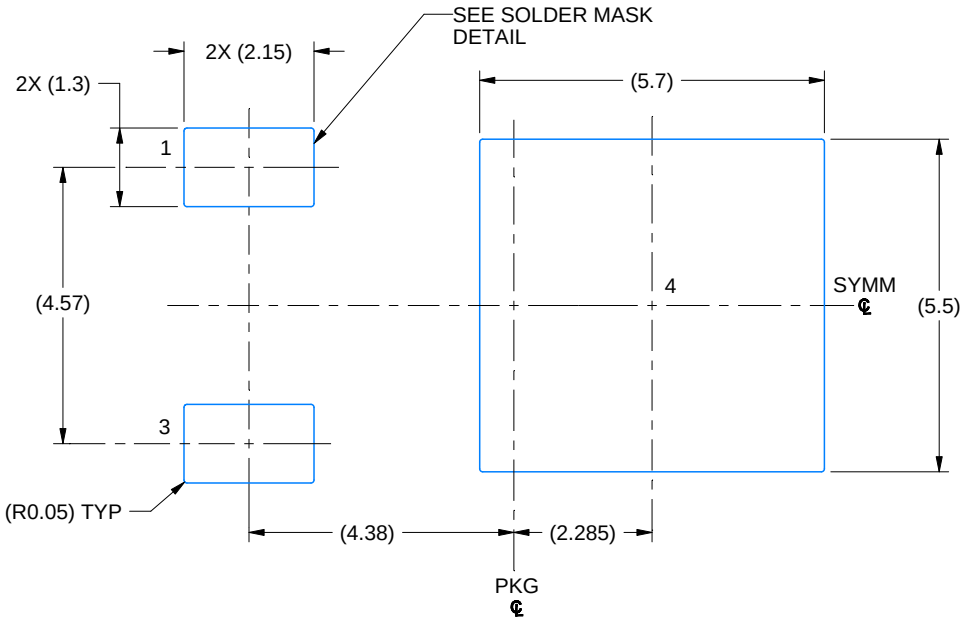

LAND PATTERN EXAMPLE
EXPOSED METAL SHOWN
SCALE: 8X

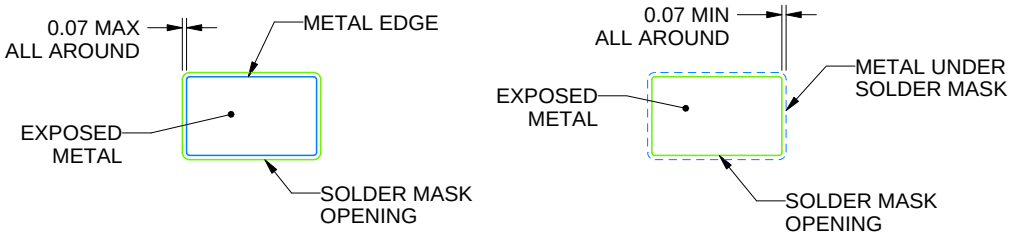

SOLDER MASK DETAIL

4219870/A 03/2018

NOTES: (continued)

4. This package is designed to be soldered to a thermal pad on the board. For more information, see Texas Instruments literature numbers SLMA002(www.ti.com/lit/slm002) and SLMA004 (www.ti.com/lit/slma004).
5. Vias are optional depending on application, refer to device data sheet. It is recommended that vias under paste be filled, plugged or tented.

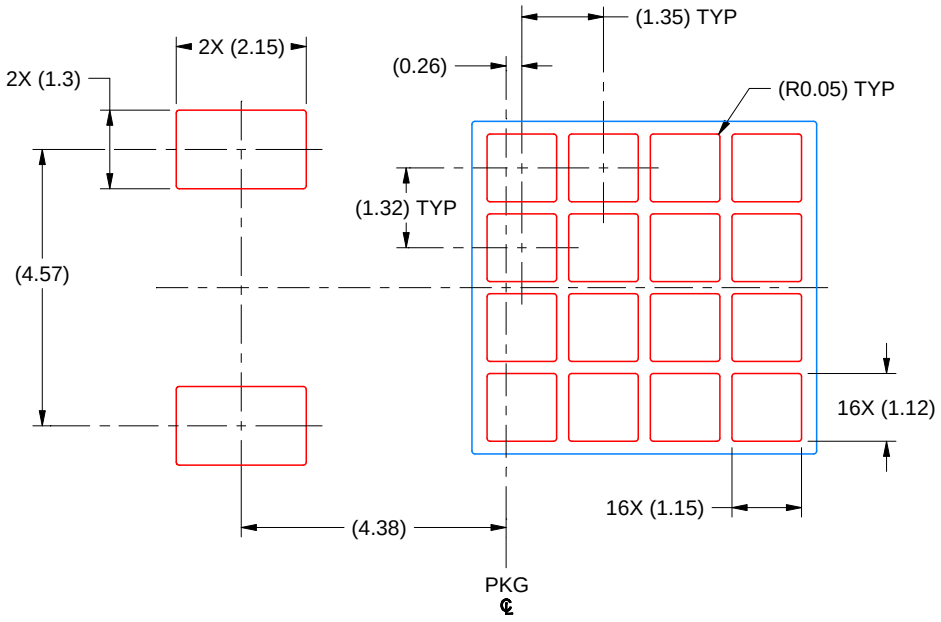

SOLDER PASTE EXAMPLE
BASED ON 0.125 MM THICK STENCIL
SCALE: 8X

4219870/A 03/2018

NOTES: (continued)

6. Laser cutting apertures with trapezoidal walls and rounded corners may offer better paste release. IPC-7525 may have alternate design recommendations.
7. Board assembly site may have different recommendations for stencil design.

IMPORTANT NOTICE AND DISCLAIMER

TI PROVIDES TECHNICAL AND RELIABILITY DATA (INCLUDING DATASHEETS), DESIGN RESOURCES (INCLUDING REFERENCE DESIGNS), APPLICATION OR OTHER DESIGN ADVICE, WEB TOOLS, SAFETY INFORMATION, AND OTHER RESOURCES “AS IS” AND WITH ALL FAULTS, AND DISCLAIMS ALL WARRANTIES, EXPRESS AND IMPLIED, INCLUDING WITHOUT LIMITATION ANY IMPLIED WARRANTIES OF MERCHANTABILITY, FITNESS FOR A PARTICULAR PURPOSE OR NON-INFRINGEMENT OF THIRD PARTY INTELLECTUAL PROPERTY RIGHTS.

These resources are intended for skilled developers designing with TI products. You are solely responsible for (1) selecting the appropriate TI products for your application, (2) designing, validating and testing your application, and (3) ensuring your application meets applicable standards, and any other safety, security, or other requirements. These resources are subject to change without notice. TI grants you permission to use these resources only for development of an application that uses the TI products described in the resource. Other reproduction and display of these resources is prohibited. No license is granted to any other TI intellectual property right or to any third party intellectual property right. TI disclaims responsibility for, and you will fully indemnify TI and its representatives against, any claims, damages, costs, losses, and liabilities arising out of your use of these resources.

TI’s products are provided subject to TI’s Terms of Sale (www.ti.com/legal/termsofsale.html) or other applicable terms available either on ti.com or provided in conjunction with such TI products. TI’s provision of these resources does not expand or otherwise alter TI’s applicable warranties or warranty disclaimers for TI products.

Mailing Address: Texas Instruments, Post Office Box 655303, Dallas, Texas 75265
Copyright © 2019, Texas Instruments Incorporated

Looking for pricing, stock, or lifecycle information?

Click below to explore more details on WIN SOURCE:

- View LM317AEMPX on WIN SOURCE
- Texas Instruments Information

Optimize Your Supply Chain with WIN SOURCE Solutions

- Global Sourcing Solution
- Obsolete Management
- Cost Control Management
- Shortage Management
- Alternative Solution
- Excess Inventory Management