THE DATASHEET OF

PCA9515ADT

Dual Bidirectional I²C Bus and SMBus Repeater

1 Features

- Two-Channel Bidirectional Buffers
- I²C Bus and SMBus Compatible
- Active-High Repeater-Enable Input
- Open-Drain I²C I/O
- 5.5-V Tolerant I²C I/O and Enable Input Support Mixed-Mode Signal Operation
- Lockup-Free Operation
- Accommodates Standard Mode and Fast Mode I²C Devices and Multiple Masters
- Powered-Off High-Impedance I²C Pins
- Latch-Up Performance Exceeds 100 mA Per JESD 78, Class II
- ESD Protection Exceeds JESD 22
  - 2000-V Human-Body Model (A114-A)
  - 200-V Machine Model (A115-A)
  - 1000-V Charged-Device Model (C101)

2 Description

This dual bidirectional I²C buffer is operational at 2.3-V to 3.6-V V_{CC}.

The PCA9515A is a BiCMOS integrated circuit intended for I²C bus and SMBus systems applications. The device contains two identical bidirectional open-drain buffer circuits that enable I²C and similar bus systems to be extended without degradation of system performance.

The PCA9515A buffers both the serial data (SDA) and serial clock (SCL) signals on the I²C bus, while retaining all the operating modes and features of the I²C system. This enables two buses of 400-pF bus capacitance to be connected in an I²C application.

The I²C bus capacitance limit of 400 pF restricts the number of devices and bus length. Using the PCA9515A enables the system designer to isolate two halves of a bus, accommodating more I²C devices or longer trace lengths.

The PCA9515A has an active-high enable (EN) input with an internal pullup, which allows the user to select when the repeater is active. This can be used to isolate a badly behaved slave on power-up reset. It never should change state during an I²C operation, because disabling during a bus operation hangs the bus, and enabling part way through a bus cycle could confuse the I²C parts being enabled. The EN input should change state only when the global bus and the repeater port are in an idle state, to prevent system failures.

The PCA9515A also can be used to run two buses: one at 5-V interface levels and the other at 3.3-V interface levels, or one at 400-kHz operating frequency and the other at 100-kHz operating frequency. If the two buses are operating at different frequencies, the 100-kHz bus must be isolated when the 400-kHz operation of the other bus is required. If the master is running at 400 kHz, the maximum system operating frequency may be less than 400 kHz, because of the delays that are added by the repeater.

The PCA9515A does not support clock stretching across the repeater.

Device Information(1)

PART NUMBER	PACKAGE	BODY SIZE (NOM)
PCA9515A	SOIC (8)	4.90 mm × 3.91 mm
	SON (8)	3.00 mm × 3.00 mm

(1) For all available packages, see the orderable addendum at the end of the datasheet.

D, DCT, DGK, OR PW PACKAGE
(TOP VIEW)

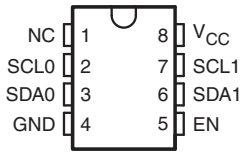

DRG PACKAGE
(TOP VIEW)

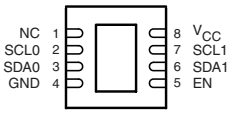

NC – No internal connection

An IMPORTANT NOTICE at the end of this data sheet addresses availability, warranty, changes, use in safety-critical applications, intellectual property matters and other important disclaimers. PRODUCTION DATA.

Table of Contents

1 Features ... 1
2 Description ... 1
3 Revision History ... 2
4 Description (Continued) ... 3
5 Pin Configuration and Functions ... 3
6 Specifications ... 4
6.1 Absolute Maximum Ratings ... 4
6.2 Handling Ratings ... 4
6.3 Recommended Operating Conditions ... 4
6.4 Electrical Characteristics ... 5
6.5 Timing Requirements ... 5
6.6 Switching Characteristics ... 5
7 Parameter Measurement Information ... 6
8 Detailed Description ... 7
8.1 Functional Block Diagram ... 7
8.2 Feature Description ... 7
8.3 Device Functional Modes ... 7
9 Application and Implementation ... 8
9.1 Typical Application ... 8
10 Device and Documentation Support ... 9
10.1 Trademarks ... 9
10.2 Electrostatic Discharge Caution ... 9
10.3 Glossary ... 9
11 Mechanical, Packaging, and Orderable Information ... 9

3 Revision History

Changes from Revision C (January 2011) to Revision D **Page**

- Added Clock Stretching Errata section. ... 7

Changes from Revision B (October 2007) to Revision C **Page**

- Deleted all references to arbitration and clock stretching support. This does not effect min/max specifications. ... 1

Copyright © 2005–2014, Texas Instruments Incorporated

4 Description (Continued)

The output low levels for each internal buffer are approximately 0.5 V, but the input voltage of each internal buffer must be 70 mV or more below the output low level, when the output internally is driven low. This prevents a lockup condition from occurring when the input low condition is released.

Two or more PCA9515A devices cannot be used in series. The PCA9515A design does not allow this configuration. Because there is no direction pin, slightly different valid low-voltage levels are used to avoid lockup conditions between the input and the output of each repeater. A valid low applied at the input of a PCA9515A is propagated as a buffered low with a slightly higher value on the enabled outputs. When this buffered low is applied to another PCA9515A-type device in series, the second device does not recognize it as a valid low and does not propagate it as a buffered low again.

The device contains a power-up control circuit that sets an internal latch to prevent the output circuits from becoming active until V_{CC} is at a valid level (V_{CC} = 2.3 V).

As with the standard I^2C system, pullup resistors are required to provide the logic high levels on the buffered bus. The PCA9515A has standard open-collector configuration of the I^2C bus. The size of these pullup resistors depends on the system, but each side of the repeater must have a pullup resistor. The device is designed to work with Standard Mode and Fast Mode I^2C devices in addition to SMBus devices. Standard Mode I^2C devices only specify 3 mA in a generic I^2C system where Standard Mode devices and multiple masters are possible. Under certain conditions, high termination currents can be used.

5 Pin Configuration and Functions

D, DCT, DGK, OR PW PACKAGE
(TOP VIEW)

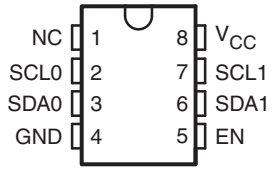

DRG PACKAGE
(TOP VIEW)

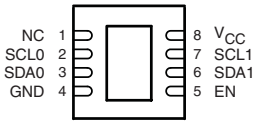

NC – No internal connection

Pin Functions

PIN		DESCRIPTION
NAME	NO.	
NC	1	No internal connection
SCL0	2	Serial clock bus 0
SDA0	3	Serial data bus 0
GND	4	Supply ground
EN	5	Active-high repeater enable input
SDA1	6	Serial data bus 1
SCL1	7	Serial clock bus 1
V_{CC}	8	Supply power

Copyright © 2005–2014, Texas Instruments Incorporated

6 Specifications

6.1 Absolute Maximum Ratings(1)

over operating free-air temperature range (unless otherwise noted)

			MIN	MAX	UNIT
V_{CC}	Supply voltage range		–0.5	7	V
V_I	Enable input voltage range(2)		–0.5	7	V
$V_{I/O}$	I^2C bus voltage range(2)		–0.5	7	V
I_{IK}	Input clamp current	$V_I < 0$		–50	mA
I_{OK}	Output clamp current	$V_O < 0$		–50	mA
I_O	Continuous output current			±50	mA
	Continuous current through V_{CC} or GND			±100	mA
θ_{JA}	Package thermal impedance(3)	D package		97	°C/W
		DCT package		220	
		DGK package		172	
		DRG package		TBD	
		PW package		149	

(1) Stresses beyond those listed under *Absolute Maximum Ratings* may cause permanent damage to the device. These are stress ratings only, and functional operation of the device at these or any other conditions beyond those indicated under *Recommended Operating Conditions* is not implied. Exposure to absolute-maximum-rated conditions for extended periods may affect device reliability.
(2) The input negative-voltage and output voltage ratings may be exceeded if the input and output current ratings are observed.
(3) The package thermal impedance is calculated in accordance with JESD 51-7.

6.2 Handling Ratings

			MIN	MAX	UNIT
T_{stg}	Storage temperature range		–65	150	°C
$V_{(ESD)}$	Electrostatic discharge	Human body model (HBM), per ANSI/ESDA/JEDEC JS-001, all pins(1)	0	2000	V
		Charged device model (CDM), per JEDEC specification JESD22-C101, all pins(2)	0	1000	

(1) JEDEC document JEP155 states that 500-V HBM allows safe manufacturing with a standard ESD control process.
(2) JEDEC document JEP157 states that 250-V CDM allows safe manufacturing with a standard ESD control process.

6.3 Recommended Operating Conditions

			MIN	MAX	UNIT
V_{CC}	Supply voltage		2.3	3.6	V
V_{IH}	High-level input voltage	SDA and SCL inputs	0.7 × V_{CC}	5.5	V
		EN input	2	5.5	
V_{IL} (1)	Low-level input voltage	SDA and SCL inputs	–0.5	0.3 × V_{CC}	V
		EN input	–0.5	0.8	
V_{ILc} (1)	SDA and SCL low-level input voltage contention		–0.5	0.4	V
I_{OL}	Low-level output current	V_{CC} = 2.3 V		6	mA
		V_{CC} = 3 V		6	
T_A	Operating free-air temperature		–40	85	°C

(1) V_{IL} specification is for the EN input and the first low level seen by the SDAx and SCLx lines. V_{ILc} is for the second and subsequent low levels seen by the SDAx and SCLx lines. V_{ILc} must be at least 70 mV below V_{OL}.

Copyright © 2005–2014, Texas Instruments Incorporated

6.4 Electrical Characteristics

over recommended operating free-air temperature range (unless otherwise noted)

PARAMETER			TEST CONDITIONS		V_{CC}	MIN	TYP(1)	MAX	UNIT
V_{IK}	Input diode clamp voltage		I_I = –18 mA		2.3 V to 3.6 V			–1.2	V
V_{OL}	Low-level output voltage	SDAx, SCLx	I_{OL} = 20 µA or 6 mA		2.3 V to 3.6 V	0.47	0.52	0.6	V
V_{OL} – V_{ILc}	Low-level input voltage below low-level output voltage	SDAx, SCLx	I_I = 10 µA		2.3 V to 3.6 V			70	mV
I_{CC}	Quiescent supply current		Both channels high, SDAx = SCLx = V_{CC}		2.7 V		0.5	3	mA
					3.6 V		0.5	3	
			Both channels low, SDA0 = SCL0 = GND and SDA1 = SCL1 = open; or SDA0 = SCL0 = open and SDA1 = SCL1 = GND		2.7 V		1	4	
					3.6 V		1	4	
			In contention, SDAx = SCLx = GND		2.7 V		1	4	
					3.6 V		1	4	
I_I	Input current	SDAx, SCLx	V_I = 3.6 V		2.3 V to 3.6 V			±1	µA
			V_I = 0.2 V					3	
		EN	V_I = V_{CC}					±1	
			V_I = 0.2 V				–10	–20	
I_{off}	Leakage current	SDAx, SCLx	V_I = 3.6 V	EN = L or H	0 V			0.5	µA
			V_I = GND					0.5	
$I_{I(ramp)}$	Leakage current during power up	SDAx, SCLx	V_I = 3.6 V	EN = L or H	0 V to 2.3 V			1	µA
C_{in}	Input capacitance	EN	V_I = 3 V or GND		3.3 V		7	9	pF
		SDAx, SCLx		EN = H	3.3 V		7	9	

(1) All typical values are at nominal supply voltage (V_{CC} = 2.5 V or 3.3 V) and T_A = 25°C.

6.5 Timing Requirements

over recommended operating free-air temperature range (unless otherwise noted) (see Figure 1)

		V_{CC} = 2.5 V ± 0.2 V		V_{CC} = 3.3 V ± 0.3 V		UNIT
		MIN	MAX	MIN	MAX	
t_{su}	Setup time, EN↑ before Start condition	100		100		ns
t_h	Hold time, EN↓ after Stop condition	130		100		ns

6.6 Switching Characteristics

over recommended operating free-air temperature range, C_L ≤ 100 pF (unless otherwise noted)

PARAMETER		FROM (INPUT)	TO (OUTPUT)	V_{CC} = 2.5 V ± 0.2 V			V_{CC} = 3.3 V ± 0.3 V			UNIT
				MIN	TYP(1)	MAX	MIN	TYP(1)	MAX	
t_{PZL}	Propagation delay time(2)	SDA0, SCL0 or SDA1, SCL1	SDA1, SCL1 or SDA0, SCL0	45	82	130	45	68	120	ns
t_{PLZ}				33	113	190	33	102	180	
t_{tHL}	Output transition time(2) (SDAx, SCLx)	80%	20%		57			58		ns
t_{tLH}		20%	80%		148			147		

(1) All typical values are at nominal supply voltage (V_{CC} = 2.5 V or 3.3 V) and T_A = 25°C.
(2) Different load resistance and capacitance alter the RC time constant, thereby changing the propagation delay and transition times.

Copyright © 2005–2014, Texas Instruments Incorporated

7 Parameter Measurement Information

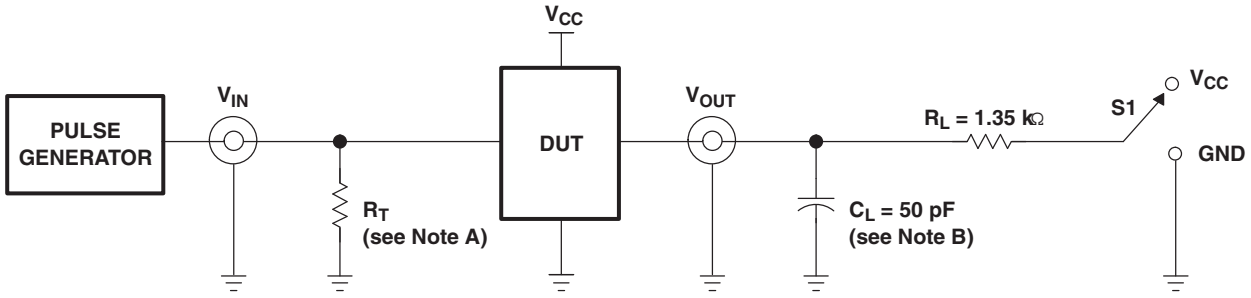

TEST	S1
t_{PLZ}/t_{PZL}	V_{CC}

TEST CIRCUIT FOR OPEN-DRAIN OUTPUT

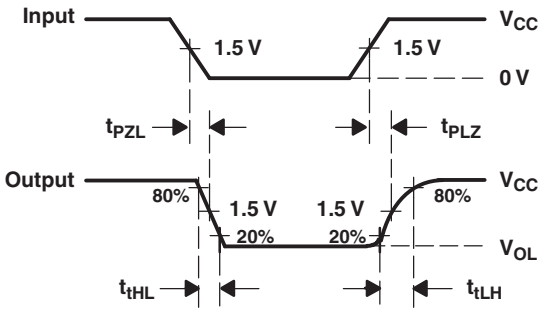

VOLTAGE WAVEFORMS
PROPAGATION DELAY AND OUTPUT TRANSITION TIMES

A. R_T termination resistance should be equal to Z_{OUT} of pulse generators.

B. C_L includes probe and jig capacitance.

C. All input pulses are supplied by generators having the following characteristics: PRR ≤ 10 MHz, Z_O = 50 Ω, slew rate ≥ 1 V/ns.

D. The outputs are measured one at a time, with one transition per measurement.

E. t_{PLH} and t_{PHL} are the same as t_{pd}.

F. t_{PLZ} and t_{PHZ} are the same as t_{dis}.

G. t_{PZL} and t_{PZH} are the same as t_{en}.

Figure 1. Test Circuit and Voltage Waveforms

Copyright © 2005–2014, Texas Instruments Incorporated

8 Detailed Description

8.1 Functional Block Diagram

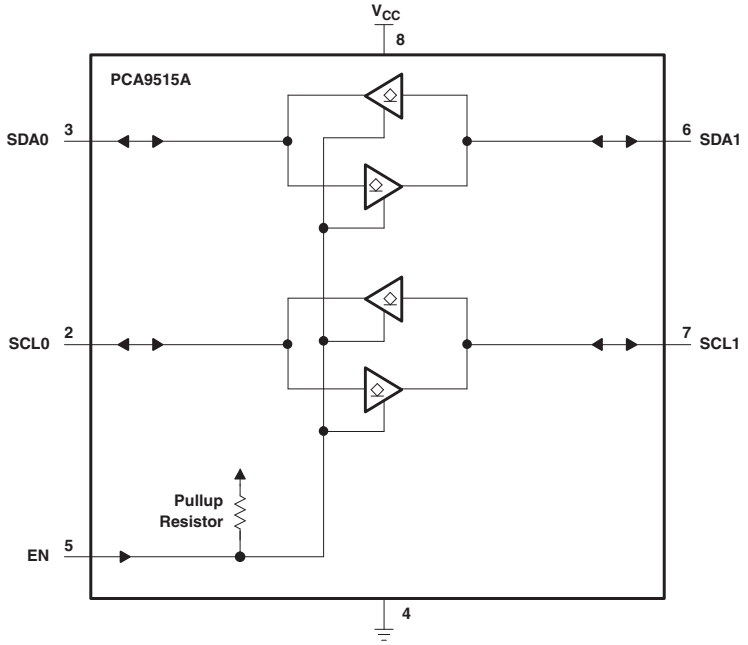

Figure 2. Logic Diagram (Positive Logic)

8.2 Feature Description

8.2.1 Clock Stretching Errata

Description

Due to the static offset on both sides of the buffer (SCLx & SDAx) and the possibility of an overshoot above 500 mV during events like clock stretching, the device should not be used with rise time accelerators.

System Impact

An incorrect logic state will be passed through the buffer, creating an I2C communication failure on the bus.

System Workaround

There is a possible workaround to avoid an I2C communication failure:

- Do not use rise-time accelerators in conjunction with the PCA9515A.

8.3 Device Functional Modes

Table 1. Function Table

INPUT EN	FUNCTION
L	Outputs disabled
H	SDA0 = SDA1 SCL0 = SCL1

Copyright © 2005–2014, Texas Instruments Incorporated

9 Application and Implementation

9.1 Typical Application

A typical application is shown in Figure 3. In this example, the system master is running on a 3.3-V bus, while the slave is connected to a 5-V bus. Both buses run at 100 kHz, unless the slave bus is isolated, and then the master bus can run at 400 kHz. Master devices can be placed on either bus.

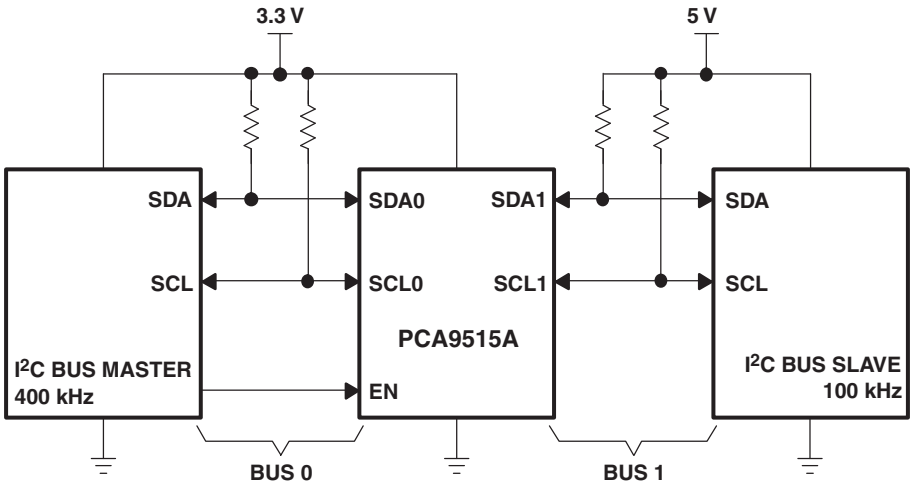

Figure 3. Typical Application

9.1.1 Design Requirements

The PCA9515A is 5.5-V tolerant, so it does not require any additional circuitry to translate between the different bus voltages.

When one side of the PCA9515A is pulled low by a device on the I^2C bus, a CMOS hysteresis-type input detects the falling edge and causes an internal driver on the other side to turn on, thus causing the other side also to go low. The side driven low by the PCA9515A typically is at V_{OL} = 0.5 V.

9.1.2 Detailed Design Procedure

Figure 4 and Figure 5 show the waveforms that are seen in a typical application. If the bus master in Figure 3 writes to the slave through the PCA9515A, Bus 0 has the waveform shown in Figure 4. This looks like a normal I^2C transmission until the falling edge of the eighth clock pulse. At that point, the master releases the data line (SDA) while the slave pulls it low through the PCA9515A. Because the V_{OL} of the PCA9515A typically is around 0.5 V, a step in the SDA is seen. After the master has transmitted the ninth clock pulse, the slave releases the data line.

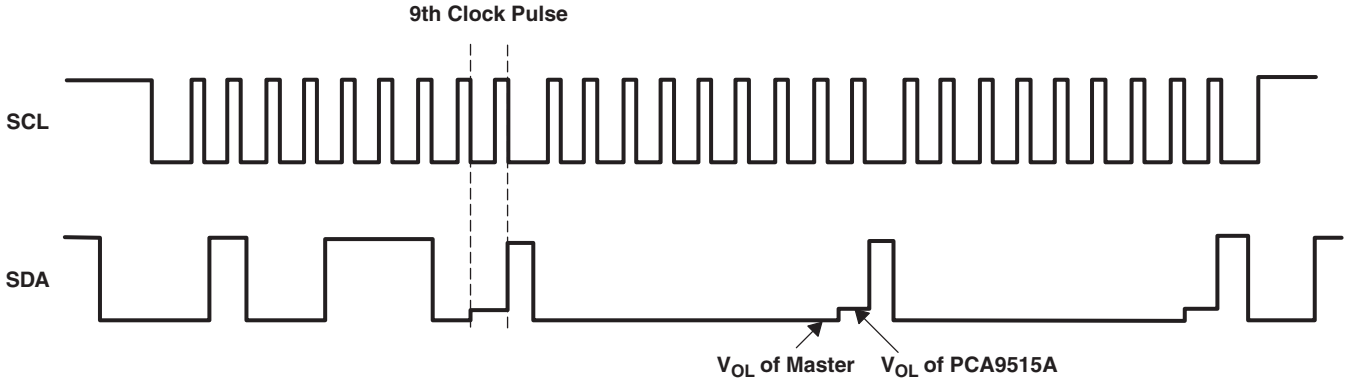

Figure 4. Bus 0 Waveforms

Copyright © 2005–2014, Texas Instruments Incorporated

Typical Application (continued)

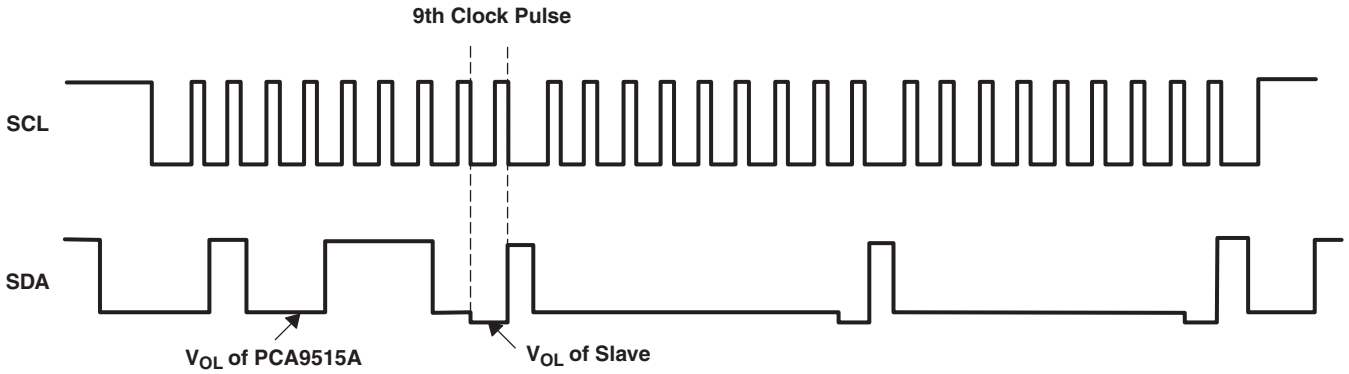

Figure 5. Bus 1 Waveforms

On the Bus 1 side of the PCA9515A, the clock and data lines have a positive offset from ground equal to the V_{OL} of the PCA9515A. After the eighth clock pulse, the data line is pulled to the V_{OL} of the slave device, which is very close to ground in the example.

10 Device and Documentation Support

10.1 Trademarks

All trademarks are the property of their respective owners.

10.2 Electrostatic Discharge Caution

These devices have limited built-in ESD protection. The leads should be shorted together or the device placed in conductive foam during storage or handling to prevent electrostatic damage to the MOS gates.

10.3 Glossary

SLYZ022 — *TI Glossary*.

This glossary lists and explains terms, acronyms, and definitions.

11 Mechanical, Packaging, and Orderable Information

The following pages include mechanical, packaging, and orderable information. This information is the most current data available for the designated devices. This data is subject to change without notice and revision of this document. For browser-based versions of this data sheet, refer to the left-hand navigation.

Copyright © 2005–2014, Texas Instruments Incorporated

PACKAGING INFORMATION

Orderable Device	Status (1)	Package Type	Package Drawing	Pins	Package Qty	Eco Plan (2)	Lead/Ball Finish (6)	MSL Peak Temp (3)	Op Temp (°C)	Device Marking (4/5)	Samples
PCA9515AD	ACTIVE	SOIC	D	8	75	Green (RoHS & no Sb/Br)	CU NIPDAU	Level-1-260C-UNLIM	-40 to 85	PD515A	Samples
PCA9515ADGKR	NRND	VSSOP	DGK	8	2500	Green (RoHS & no Sb/Br)	CU NIPDAU	Level-1-260C-UNLIM	-40 to 85	(7BA, 7BE)	
PCA9515ADGKRG4	NRND	VSSOP	DGK	8	2500	Green (RoHS & no Sb/Br)	CU NIPDAU	Level-1-260C-UNLIM	-40 to 85	(7BA, 7BE)	
PCA9515ADGKT	NRND	VSSOP	DGK	8	250	Green (RoHS & no Sb/Br)	CU NIPDAU	Level-1-260C-UNLIM	-40 to 85	(7BA, 7BE)	
PCA9515ADGKTG4	NRND	VSSOP	DGK	8	250	Green (RoHS & no Sb/Br)	CU NIPDAU	Level-1-260C-UNLIM	-40 to 85	(7BA, 7BE)	
PCA9515ADR	ACTIVE	SOIC	D	8	2500	Green (RoHS & no Sb/Br)	CU NIPDAU	Level-1-260C-UNLIM	-40 to 85	PD515A	Samples
PCA9515ADRGR	ACTIVE	SON	DRG	8	3000	Green (RoHS & no Sb/Br)	CU NIPDAU	Level-2-260C-1 YEAR	-40 to 85	ZVD	Samples
PCA9515ADT	ACTIVE	SOIC	D	8	250	Green (RoHS & no Sb/Br)	CU NIPDAU	Level-1-260C-UNLIM	-40 to 85	PD515A	Samples
PCA9515APW	ACTIVE	TSSOP	PW	8	150	Green (RoHS & no Sb/Br)	CU NIPDAU	Level-1-260C-UNLIM	-40 to 85	PD515A	Samples
PCA9515APWR	ACTIVE	TSSOP	PW	8	2000	Green (RoHS & no Sb/Br)	CU NIPDAU	Level-1-260C-UNLIM	-40 to 85	PD515A	Samples
PCA9515APWT	ACTIVE	TSSOP	PW	8	250	Green (RoHS & no Sb/Br)	CU NIPDAU	Level-1-260C-UNLIM	-40 to 85	PD515A	Samples

(1) The marketing status values are defined as follows:
ACTIVE: Product device recommended for new designs.
LIFEBUY: TI has announced that the device will be discontinued, and a lifetime-buy period is in effect.
NRND: Not recommended for new designs. Device is in production to support existing customers, but TI does not recommend using this part in a new design.
PREVIEW: Device has been announced but is not in production. Samples may or may not be available.
OBSOLETE: TI has discontinued the production of the device.

(2) **RoHS:** TI defines "RoHS" to mean semiconductor products that are compliant with the current EU RoHS requirements for all 10 RoHS substances, including the requirement that RoHS substance do not exceed 0.1% by weight in homogeneous materials. Where designed to be soldered at high temperatures, "RoHS" products are suitable for use in specified lead-free processes. TI may reference these types of products as "Pb-Free".
RoHS Exempt: TI defines "RoHS Exempt" to mean products that contain lead but are compliant with EU RoHS pursuant to a specific EU RoHS exemption.
Green: TI defines "Green" to mean the content of Chlorine (Cl) and Bromine (Br) based flame retardants meet JS709B low halogen requirements of <=1000ppm threshold. Antimony trioxide based flame retardants must also meet the <=1000ppm threshold requirement.

(3) MSL, Peak Temp. - The Moisture Sensitivity Level rating according to the JEDEC industry standard classifications, and peak solder temperature.

(4) There may be additional marking, which relates to the logo, the lot trace code information, or the environmental category on the device.

(5) Multiple Device Markings will be inside parentheses. Only one Device Marking contained in parentheses and separated by a "~" will appear on a device. If a line is indented then it is a continuation of the previous line and the two combined represent the entire Device Marking for that device.

(6) Lead/Ball Finish - Orderable Devices may have multiple material finish options. Finish options are separated by a vertical ruled line. Lead/Ball Finish values may wrap to two lines if the finish value exceeds the maximum column width.

Important Information and Disclaimer: The information provided on this page represents TI's knowledge and belief as of the date that it is provided. TI bases its knowledge and belief on information provided by third parties, and makes no representation or warranty as to the accuracy of such information. Efforts are underway to better integrate information from third parties. TI has taken and continues to take reasonable steps to provide representative and accurate information but may not have conducted destructive testing or chemical analysis on incoming materials and chemicals. TI and TI suppliers consider certain information to be proprietary, and thus CAS numbers and other limited information may not be available for release.

In no event shall TI's liability arising out of such information exceed the total purchase price of the TI part(s) at issue in this document sold by TI to Customer on an annual basis.

TAPE AND REEL INFORMATION

REEL DIMENSIONS

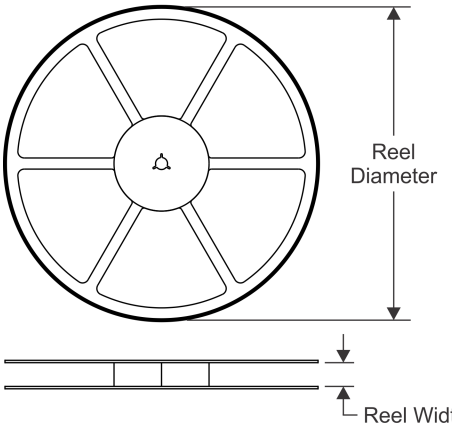

TAPE DIMENSIONS

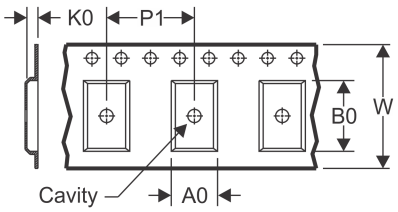

A0	Dimension designed to accommodate the component width
B0	Dimension designed to accommodate the component length
K0	Dimension designed to accommodate the component thickness
W	Overall width of the carrier tape
P1	Pitch between successive cavity centers

QUADRANT ASSIGNMENTS FOR PIN 1 ORIENTATION IN TAPE

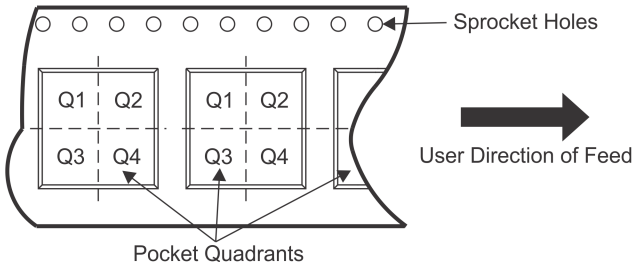

*All dimensions are nominal

Device	Package Type	Package Drawing	Pins	SPQ	Reel Diameter (mm)	Reel Width W1 (mm)	A0 (mm)	B0 (mm)	K0 (mm)	P1 (mm)	W (mm)	Pin1 Quadrant
PCA9515ADGKR	VSSOP	DGK	8	2500	330.0	12.4	5.3	3.3	1.3	8.0	12.0	Q1
PCA9515ADGKR	VSSOP	DGK	8	2500	330.0	12.4	5.3	3.4	1.4	8.0	12.0	Q1
PCA9515ADGKT	VSSOP	DGK	8	250	330.0	12.4	5.3	3.4	1.4	8.0	12.0	Q1
PCA9515ADGKT	VSSOP	DGK	8	250	180.0	12.4	5.3	3.3	1.3	8.0	12.0	Q1
PCA9515ADR	SOIC	D	8	2500	330.0	12.4	6.4	5.2	2.1	8.0	12.0	Q1
PCA9515ADRGR	SON	DRG	8	3000	330.0	12.4	3.3	3.3	1.1	8.0	12.0	Q2
PCA9515ADT	SOIC	D	8	250	180.0	12.4	6.4	5.2	2.1	8.0	12.0	Q1
PCA9515APWR	TSSOP	PW	8	2000	330.0	12.4	7.0	3.6	1.6	8.0	12.0	Q1
PCA9515APWT	TSSOP	PW	8	250	330.0	12.4	7.0	3.6	1.6	8.0	12.0	Q1

TAPE AND REEL BOX DIMENSIONS

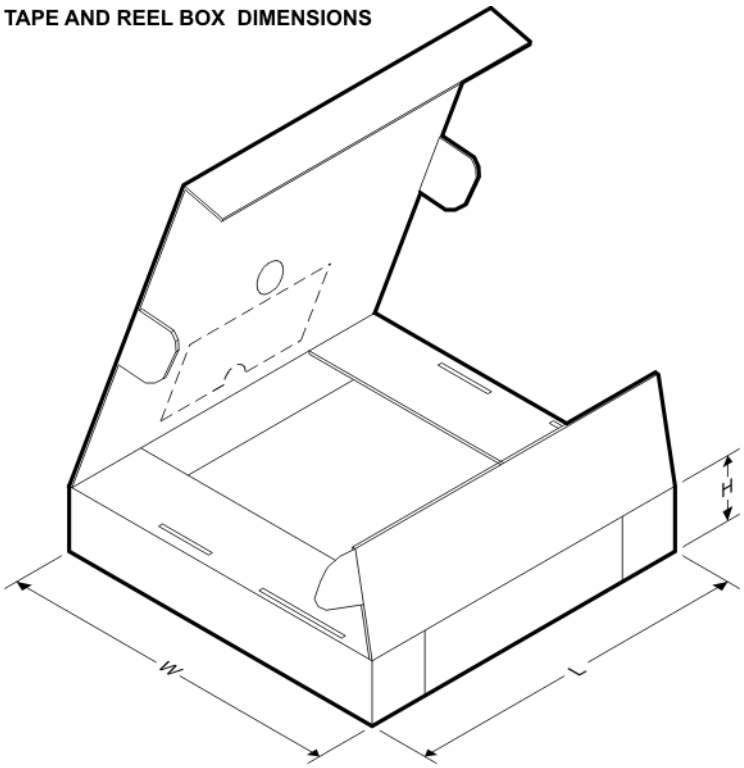

*All dimensions are nominal

Device	Package Type	Package Drawing	Pins	SPQ	Length (mm)	Width (mm)	Height (mm)
PCA9515ADGKR	VSSOP	DGK	8	2500	346.0	346.0	35.0
PCA9515ADGKR	VSSOP	DGK	8	2500	358.0	335.0	35.0
PCA9515ADGKT	VSSOP	DGK	8	250	358.0	335.0	35.0
PCA9515ADGKT	VSSOP	DGK	8	250	220.0	205.0	50.0
PCA9515ADR	SOIC	D	8	2500	367.0	367.0	35.0
PCA9515ADRGR	SON	DRG	8	3000	367.0	367.0	35.0
PCA9515ADT	SOIC	D	8	250	210.0	185.0	35.0
PCA9515APWR	TSSOP	PW	8	2000	367.0	367.0	35.0
PCA9515APWT	TSSOP	PW	8	250	367.0	367.0	35.0

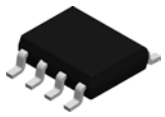

PACKAGE OUTLINE

D0008A

SOIC - 1.75 mm max height

SMALL OUTLINE INTEGRATED CIRCUIT

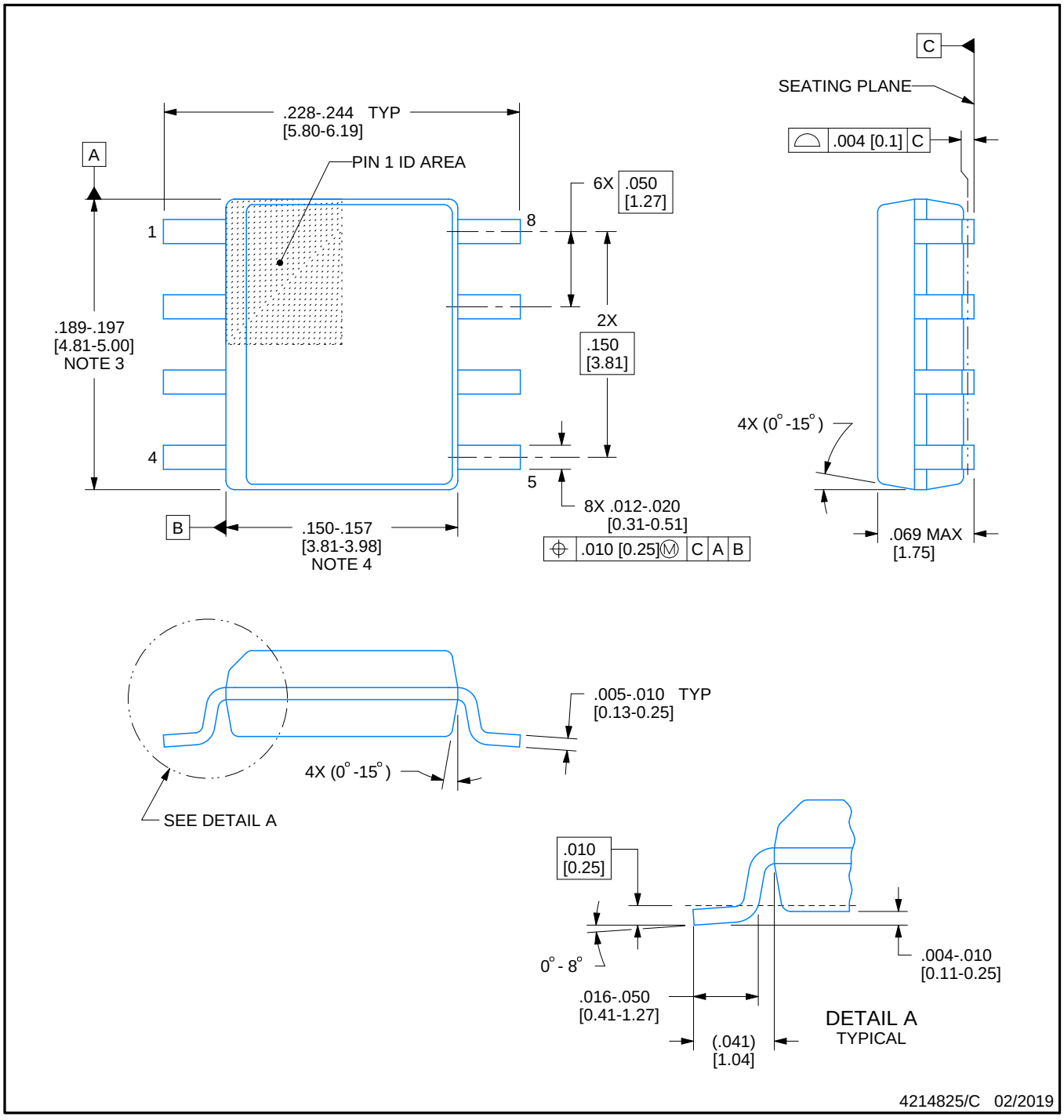

NOTES:

1. Linear dimensions are in inches [millimeters]. Dimensions in parenthesis are for reference only. Controlling dimensions are in inches. Dimensioning and tolerancing per ASME Y14.5M.
2. This drawing is subject to change without notice.
3. This dimension does not include mold flash, protrusions, or gate burrs. Mold flash, protrusions, or gate burrs shall not exceed .006 [0.15] per side.
4. This dimension does not include interlead flash.
5. Reference JEDEC registration MS-012, variation AA.

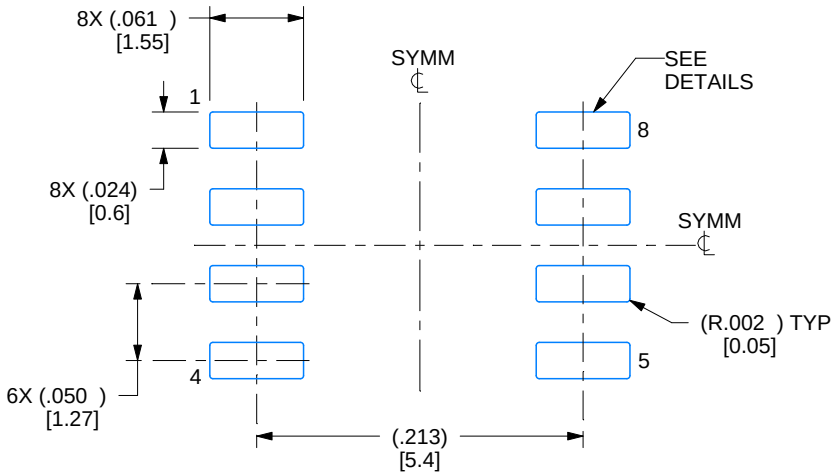

LAND PATTERN EXAMPLE
EXPOSED METAL SHOWN
SCALE:8X

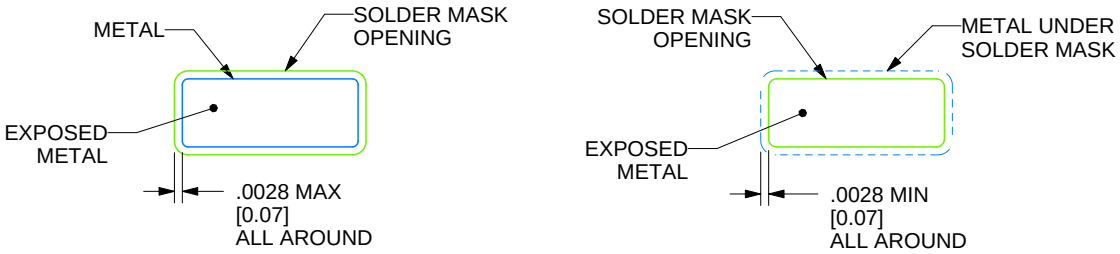

SOLDER MASK DETAILS

4214825/C 02/2019

NOTES: (continued)

6. Publication IPC-7351 may have alternate designs.
7. Solder mask tolerances between and around signal pads can vary based on board fabrication site.

EXAMPLE STENCIL DESIGN

D0008A

SOIC - 1.75 mm max height

SMALL OUTLINE INTEGRATED CIRCUIT

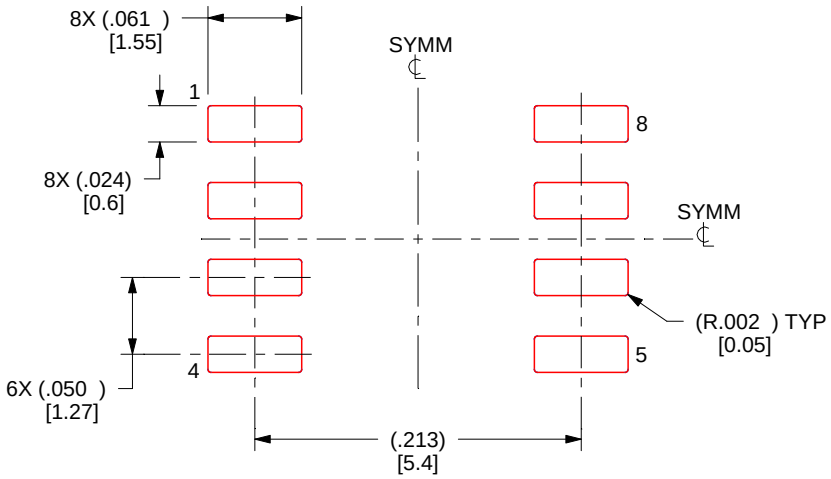

SOLDER PASTE EXAMPLE
BASED ON .005 INCH [0.125 MM] THICK STENCIL
SCALE:8X

4214825/C 02/2019

NOTES: (continued)

8. Laser cutting apertures with trapezoidal walls and rounded corners may offer better paste release. IPC-7525 may have alternate design recommendations.
9. Board assembly site may have different recommendations for stencil design.

DGK (S–PDSO–G8) PLASTIC SMALL–OUTLINE PACKAGE

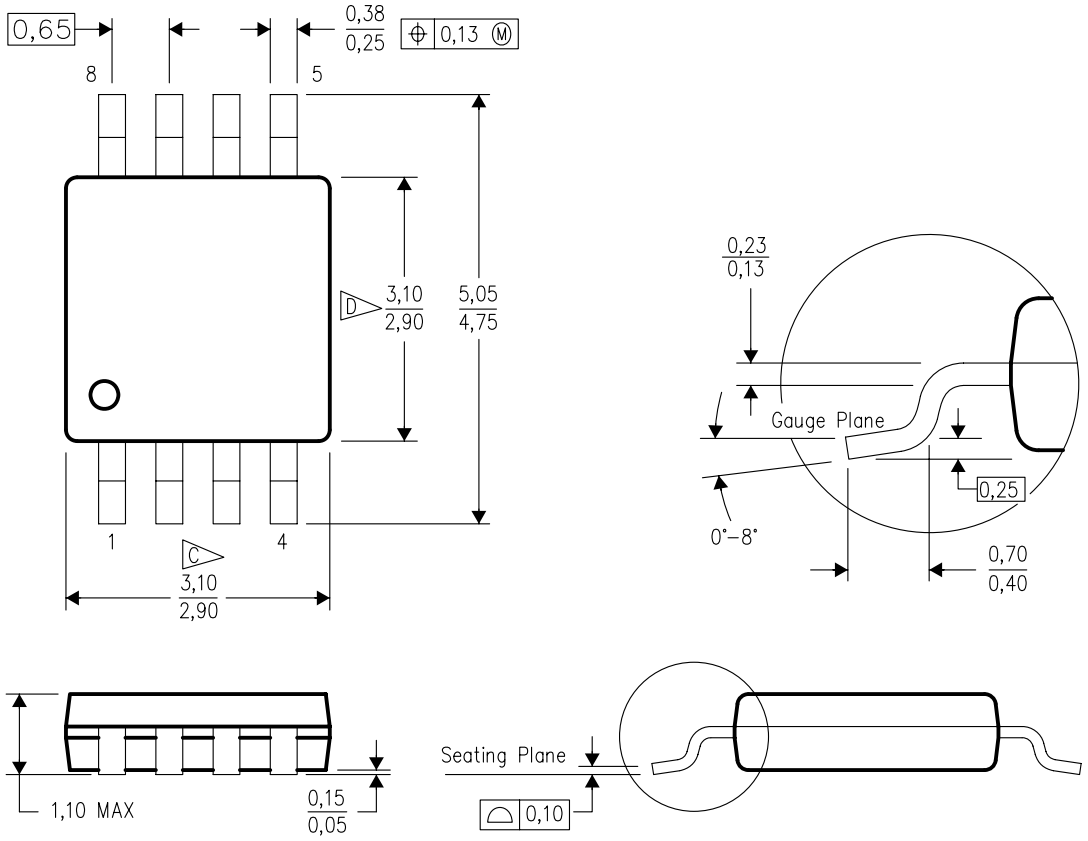

4073329/E 05/06

NOTES:
A. All linear dimensions are in millimeters.
B. This drawing is subject to change without notice.
C. Body length does not include mold flash, protrusions, or gate burrs. Mold flash, protrusions, or gate burrs shall not exceed 0.15 per end.
D. Body width does not include interlead flash. Interlead flash shall not exceed 0.50 per side.
E. Falls within JEDEC MO–187 variation AA, except interlead flash.

DGK (S–PDSO–G8) PLASTIC SMALL OUTLINE PACKAGE

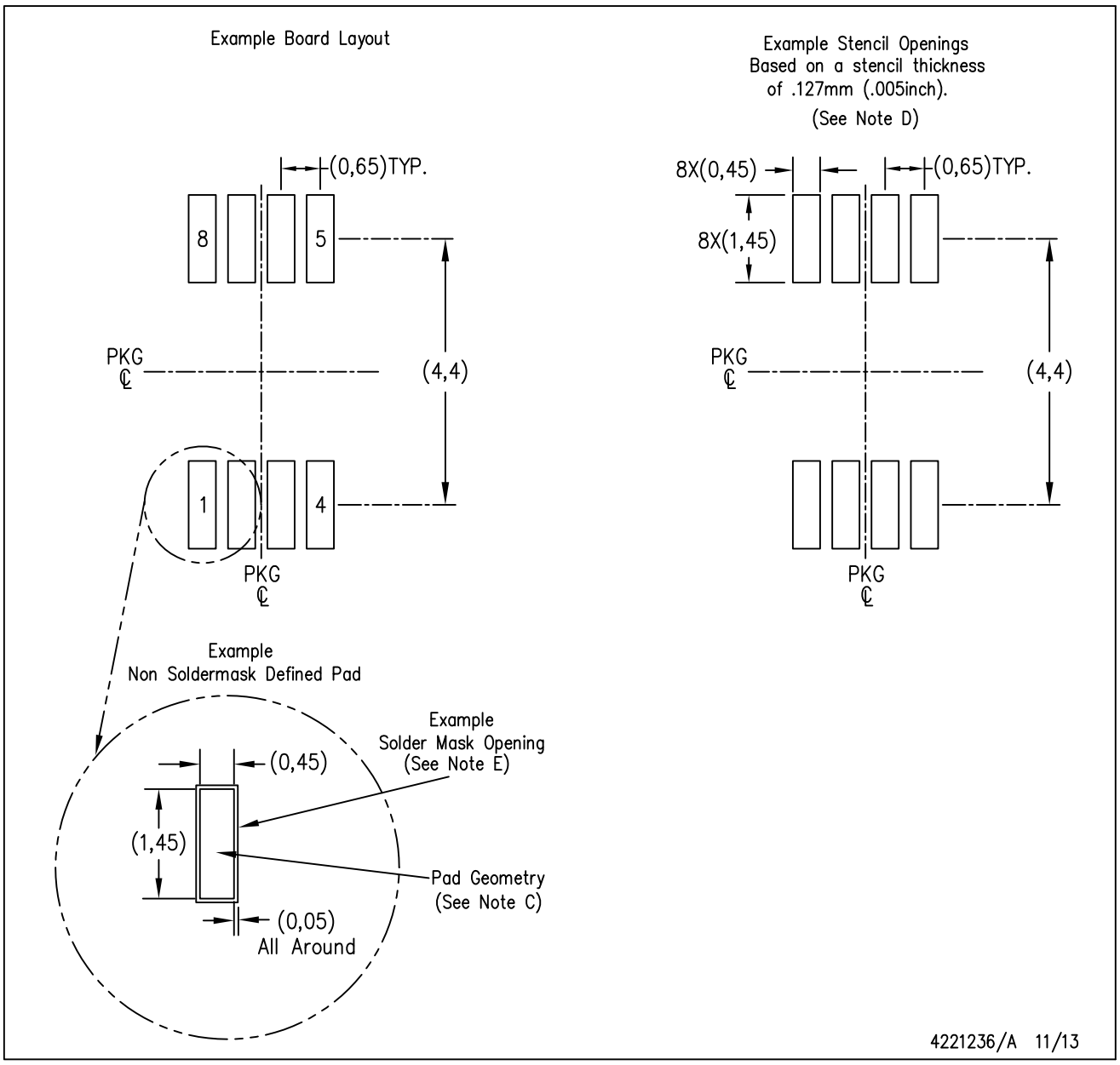

NOTES:
A. All linear dimensions are in millimeters.
B. This drawing is subject to change without notice.
C. Publication IPC–7351 is recommended for alternate designs.
D. Laser cutting apertures with trapezoidal walls and also rounding corners will offer better paste release. Customers should contact their board assembly site for stencil design recommendations. Refer to IPC–7525 for other stencil recommendations.
E. Customers should contact their board fabrication site for solder mask tolerances between and around signal pads.

DRG (S–PWSON–N8) PLASTIC SMALL OUTLINE NO–LEAD

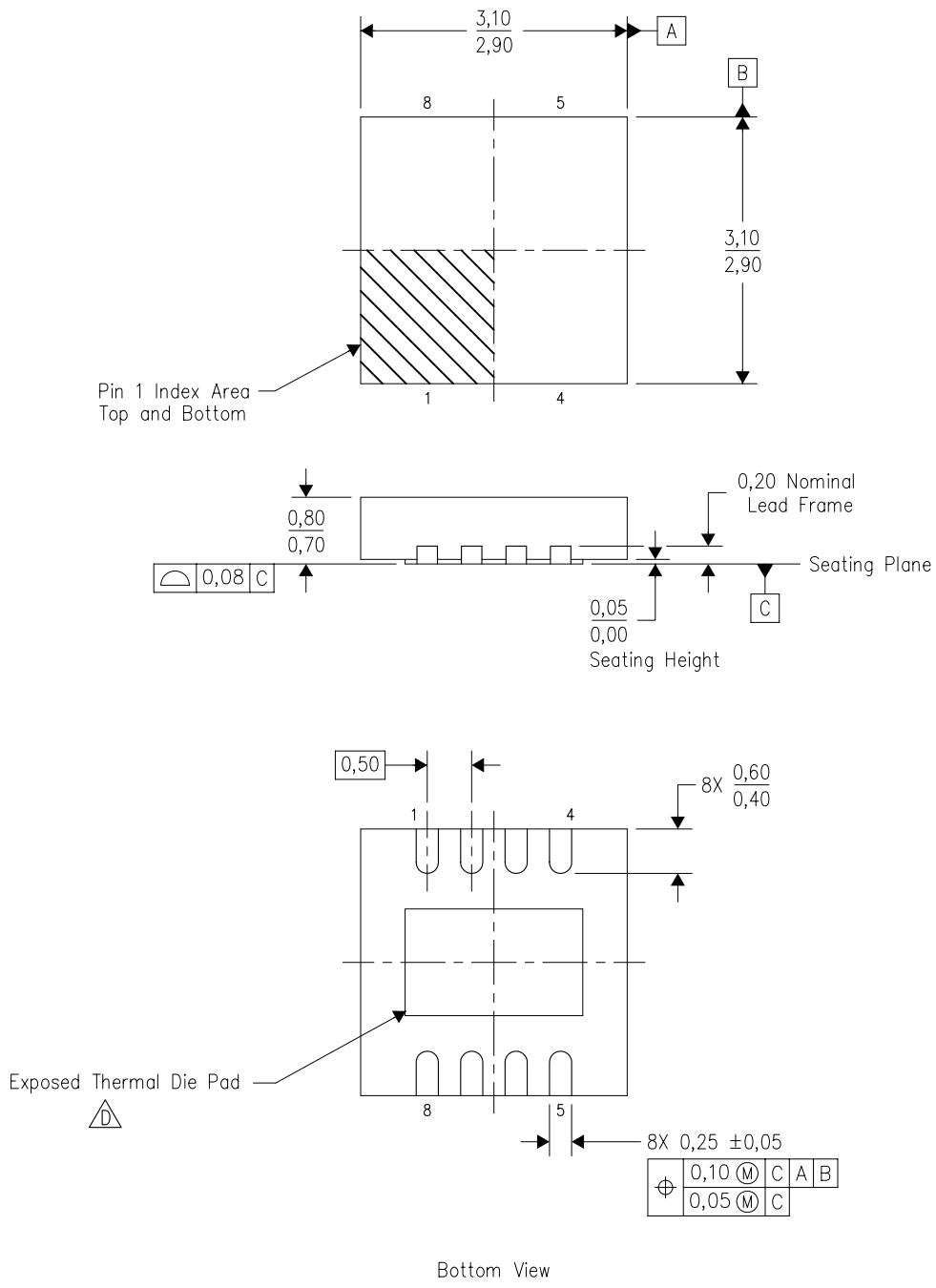

NOTES:
A. All linear dimensions are in millimeters. Dimensioning and tolerancing per ASME Y14.5M–1994.
B. This drawing is subject to change without notice.
C. SON (Small Outline No–Lead) package configuration.
D. The package thermal pad must be soldered to the board for thermal and mechanical performance. See the Product Data Sheet for details regarding the exposed thermal pad dimensions.
E. JEDEC MO–229 package registration pending.

DRG (S–PWSON–N8) PLASTIC SMALL OUTLINE NO–LEAD

THERMAL INFORMATION

This package incorporates an exposed thermal pad that is designed to be attached directly to an external heatsink. The thermal pad must be soldered directly to the printed circuit board (PCB). After soldering, the PCB can be used as a heatsink. In addition, through the use of thermal vias, the thermal pad can be attached directly to the appropriate copper plane shown in the electrical schematic for the device, or alternatively, can be attached to a special heatsink structure designed into the PCB. This design optimizes the heat transfer from the integrated circuit (IC).

For information on the Quad Flatpack No–Lead (QFN) package and its advantages, refer to Application Report, QFN/SON PCB Attachment, Texas Instruments Literature No. SLUA271. This document is available at www.ti.com.

The exposed thermal pad dimensions for this package are shown in the following illustration.

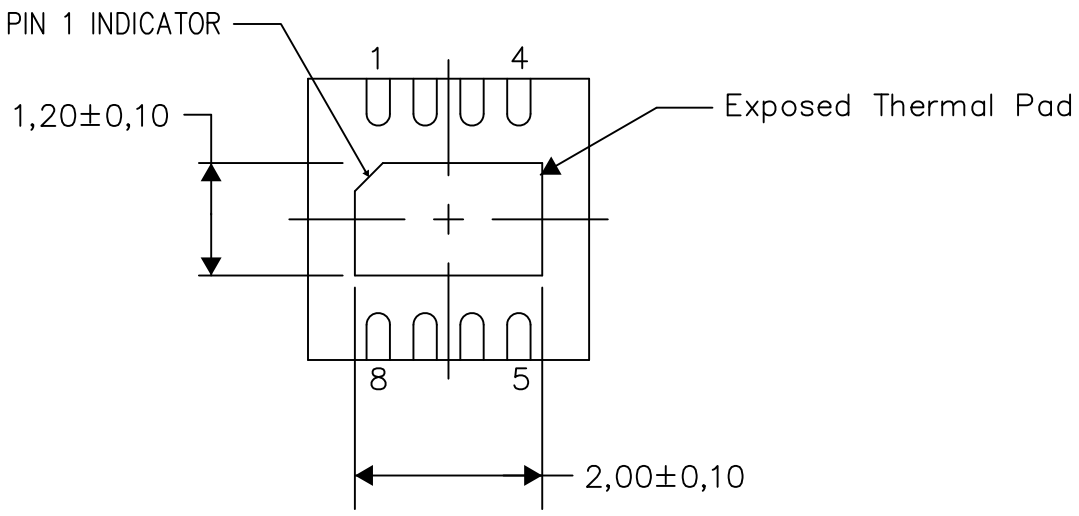

Bottom View

Exposed Thermal Pad Dimensions

4206881–2/I 03/15

NOTE: All linear dimensions are in millimeters

DRG (S–PWSON–N8) PLASTIC SMALL OUTLINE NO–LEAD

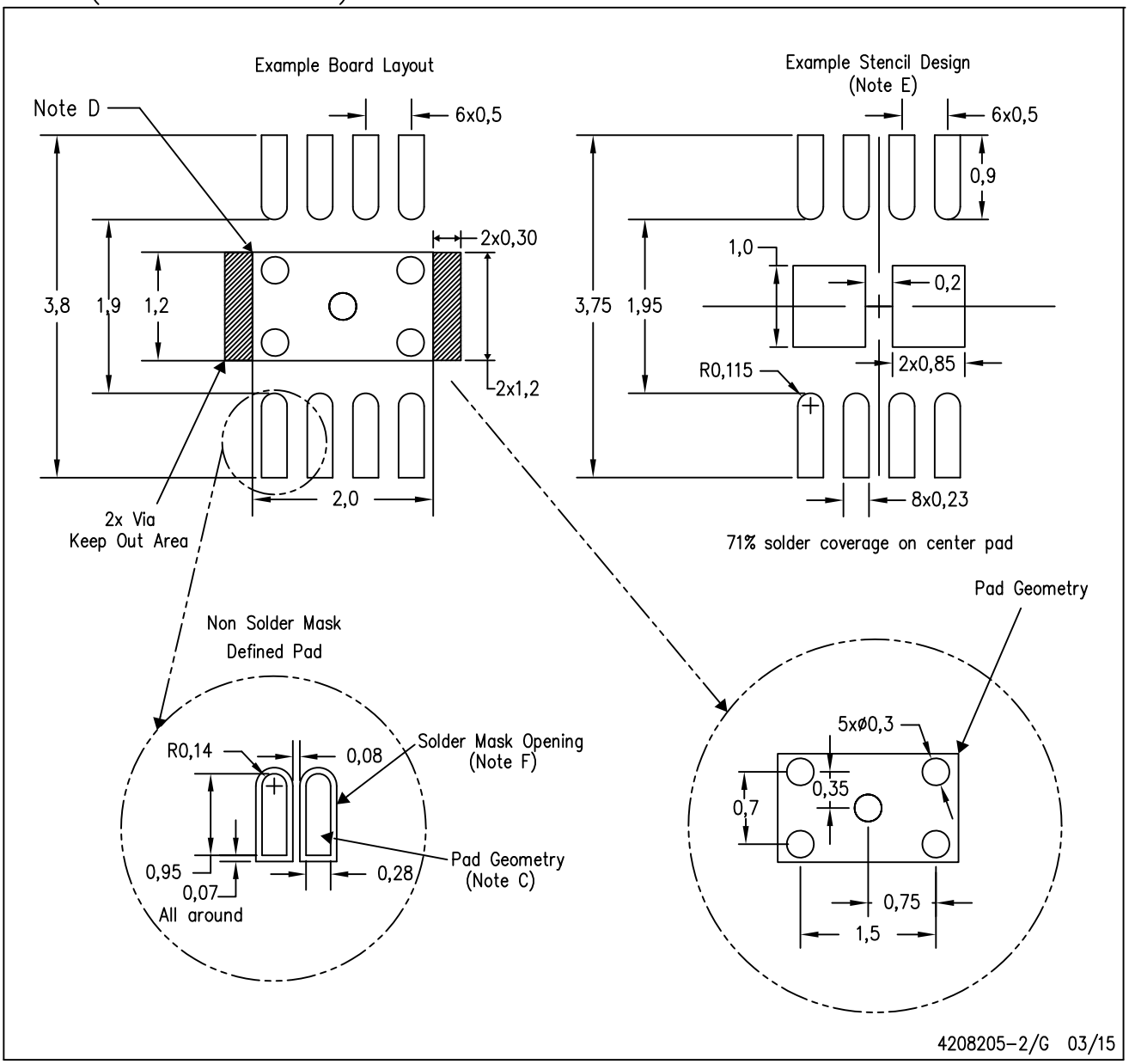

NOTES:
A. All linear dimensions are in millimeters.
B. This drawing is subject to change without notice.
C. Publication IPC–SM–782 is recommended for alternate designs.
D. This package is designed to be soldered to a thermal pad on the board. Refer to Application Note, Quad Flat–Pack Packages, Texas Instruments Literature No. SLUA271, and also the Product Data Sheets for specific thermal information, via requirements, and recommended board layout. These documents are available at www.ti.com <http://www.ti.com>.
E. Laser cutting apertures with trapezoidal walls and also rounding corners will offer better paste release. Customers should contact their board assembly site for stencil design recommendations. Refer to IPC 7525 for stencil design considerations.
F. Customers should contact their board fabrication site for minimum solder mask web tolerances between signal pads.

PACKAGE OUTLINE

PW0008A

TSSOP - 1.2 mm max height

SMALL OUTLINE PACKAGE

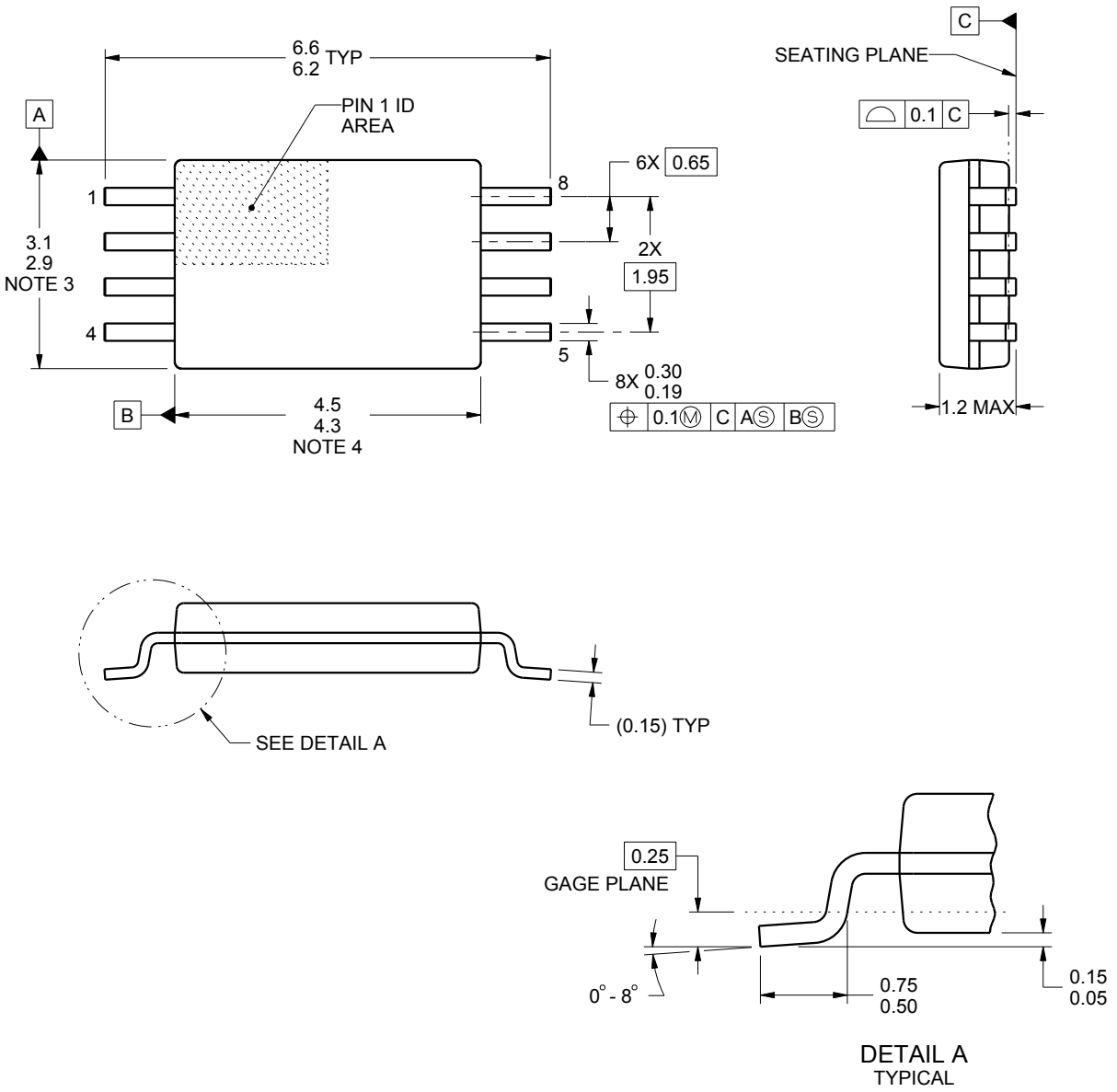

NOTES:

1. All linear dimensions are in millimeters. Any dimensions in parenthesis are for reference only. Dimensioning and tolerancing per ASME Y14.5M.
2. This drawing is subject to change without notice.
3. This dimension does not include mold flash, protrusions, or gate burrs. Mold flash, protrusions, or gate burrs shall not exceed 0.15 mm per side.
4. This dimension does not include interlead flash. Interlead flash shall not exceed 0.25 mm per side.
5. Reference JEDEC registration MO-153, variation AA.

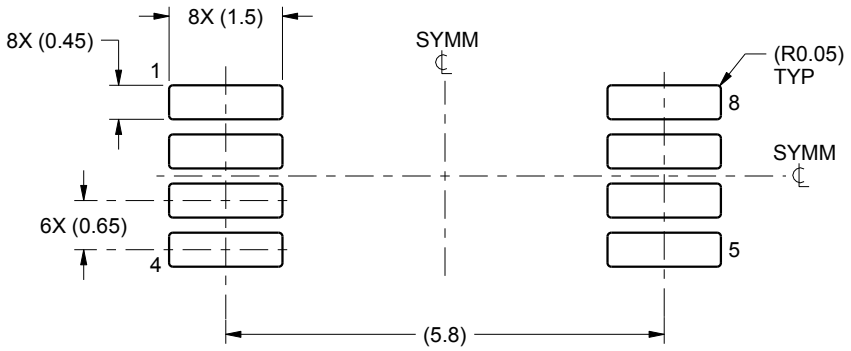

LAND PATTERN EXAMPLE
SCALE:10X

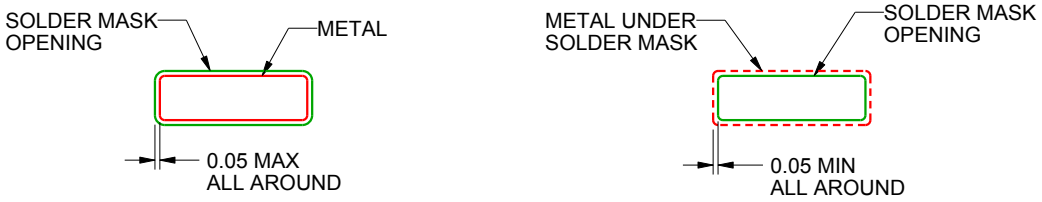

SOLDER MASK DETAILS
NOT TO SCALE

4221848/A 02/2015

NOTES: (continued)

6. Publication IPC-7351 may have alternate designs.
7. Solder mask tolerances between and around signal pads can vary based on board fabrication site.

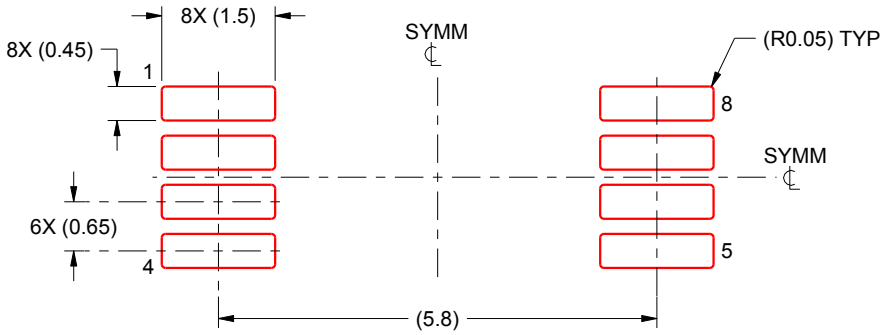

SOLDER PASTE EXAMPLE
BASED ON 0.125 mm THICK STENCIL
SCALE:10X

4221848/A 02/2015

NOTES: (continued)

8. Laser cutting apertures with trapezoidal walls and rounded corners may offer better paste release. IPC-7525 may have alternate design recommendations.
9. Board assembly site may have different recommendations for stencil design.

IMPORTANT NOTICE AND DISCLAIMER

TI PROVIDES TECHNICAL AND RELIABILITY DATA (INCLUDING DATASHEETS), DESIGN RESOURCES (INCLUDING REFERENCE DESIGNS), APPLICATION OR OTHER DESIGN ADVICE, WEB TOOLS, SAFETY INFORMATION, AND OTHER RESOURCES “AS IS” AND WITH ALL FAULTS, AND DISCLAIMS ALL WARRANTIES, EXPRESS AND IMPLIED, INCLUDING WITHOUT LIMITATION ANY IMPLIED WARRANTIES OF MERCHANTABILITY, FITNESS FOR A PARTICULAR PURPOSE OR NON-INFRINGEMENT OF THIRD PARTY INTELLECTUAL PROPERTY RIGHTS.

These resources are intended for skilled developers designing with TI products. You are solely responsible for (1) selecting the appropriate TI products for your application, (2) designing, validating and testing your application, and (3) ensuring your application meets applicable standards, and any other safety, security, or other requirements. These resources are subject to change without notice. TI grants you permission to use these resources only for development of an application that uses the TI products described in the resource. Other reproduction and display of these resources is prohibited. No license is granted to any other TI intellectual property right or to any third party intellectual property right. TI disclaims responsibility for, and you will fully indemnify TI and its representatives against, any claims, damages, costs, losses, and liabilities arising out of your use of these resources.

TI’s products are provided subject to TI’s Terms of Sale (www.ti.com/legal/termsofsale.html) or other applicable terms available either on ti.com or provided in conjunction with such TI products. TI’s provision of these resources does not expand or otherwise alter TI’s applicable warranties or warranty disclaimers for TI products.

Mailing Address: Texas Instruments, Post Office Box 655303, Dallas, Texas 75265
Copyright © 2019, Texas Instruments Incorporated

Looking for pricing, stock, or lifecycle information?

Click below to explore more details on WIN SOURCE:

- View PCA9515ADT on WIN SOURCE
- Texas Instruments Information

Optimize Your Supply Chain with WIN SOURCE Solutions

- Global Sourcing Solution
- Obsolete Management
- Cost Control Management
- Shortage Management
- Alternative Solution
- Excess Inventory Management