THE DATASHEET OF

TL084CD

TEXAS INSTRUMENTS

TL081, TL081A, TL081B, TL082, TL082A
TL082B, TL084, TL084A, TL084B

SLOS081I – FEBRUARY 1977 – REVISED MAY 2015

TL08xx JFET-Input Operational Amplifiers

1 Features

- Low Power Consumption: 1.4 mA/ch Typical
- Wide Common-Mode and Differential Voltage Ranges
- Low Input Bias Current: 30 pA Typical
- Low Input Offset Current: 5 pA Typical
- Output Short-Circuit Protection
- Low Total Harmonic Distortion: 0.003% Typical
- High Input Impedance: JFET Input Stage
- Latch-Up-Free Operation
- High Slew Rate: 13 V/μs Typical
- Common-Mode Input Voltage Range Includes V_{CC+}

2 Applications

- Tablets
- White goods
- Personal electronics
- Computers

3 Description

The TL08xx JFET-input operational amplifier family is designed to offer a wider selection than any previously developed operational amplifier family. Each of these JFET-input operational amplifiers incorporates well-matched, high-voltage JFET and bipolar transistors in a monolithic integrated circuit. The devices feature high slew rates, low input bias and offset currents, and low offset-voltage temperature coefficient.

Device Information(1)

PART NUMBER	PACKAGE	BODY SIZE (NOM)
TL084xD	SOIC (14)	8.65 mm × 3.91 mm
TL08xxFK	LCCC (20)	8.89 mm × 8.89 mm
TL084xJ	CDIP (14)	19.56 mm × 6.92 mm
TL084xN	PDIP (14)	19.3 mm × 6.35 mm
TL084xNS	SO (14)	10.3 mm × 5.3 mm
TL084xPW	TSSOP (14)	5.0 mm × 4.4 mm

(1) For all available packages, see the orderable addendum at the end of the data sheet.

Schematic Symbol

TL081

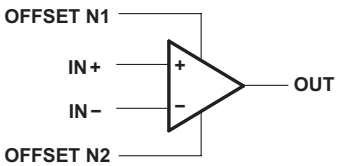

TL082 (EACH AMPLIFIER)
TL084 (EACH AMPLIFIER)

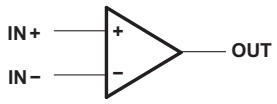

An IMPORTANT NOTICE at the end of this data sheet addresses availability, warranty, changes, use in safety-critical applications, intellectual property matters and other important disclaimers. PRODUCTION DATA.

Table of Contents

1 Features ... 1
2 Applications ... 1
3 Description ... 1
4 Revision History ... 2
5 Pin Configuration and Functions ... 3
6 Specifications ... 5
6.1 Absolute Maximum Ratings ... 5
6.2 ESD Ratings ... 5
6.3 Recommended Operating Conditions ... 5
6.4 Thermal Information ... 6
6.5 Electrical Characteristics for TL08xC, TL08xxC, and TL08xI ... 6
6.6 Electrical Characteristics for TL08xM and TL084x ... 7
6.7 Operating Characteristics ... 7
6.8 Dissipation Rating Table ... 8
6.9 Typical Characteristics ... 9
7 Parameter Measurement Information ... 13
8 Detailed Description ... 14
8.1 Overview ... 14
8.2 Functional Block Diagram ... 14
8.3 Feature Description ... 14
8.4 Device Functional Modes ... 14
9 Applications and Implementation ... 15
9.1 Application Information ... 15
9.2 Typical Applications ... 15
9.3 System Examples ... 16
10 Power Supply Recommendations ... 18
11 Layout ... 18
11.1 Layout Guidelines ... 18
11.2 Layout Examples ... 19
12 Device and Documentation Support ... 20
12.1 Documentation Support ... 20
12.2 Related Links ... 20
12.3 Community Resources ... 20
12.4 Trademarks ... 20
12.5 Electrostatic Discharge Caution ... 20
12.6 Glossary ... 20
13 Mechanical, Packaging, and Orderable Information ... 20

4 Revision History

NOTE: Page numbers for previous revisions may differ from page numbers in the current version.

Changes from Revision H (January 2014) to Revision I — **Page**

- Added *Pin Configuration and Functions* section, *Storage Conditions* table, *ESD Ratings* table, *Feature Description* section, *Device Functional Modes*, *Application and Implementation* section, *Power Supply Recommendations* section, *Layout* section, *Device and Documentation Support* section, and *Mechanical, Packaging, and Orderable Information* section ... 1
- Added *Applications* ... 1
- Moved *Typical Characteristics* into *Specifications* section. ... 9

Changes from Revision G (September 2004) to Revision H — **Page**

- Updated document to new TI data sheet format - no specification changes. ... 1
- Deleted *Ordering Information* table. ... 1

Copyright © 1977–2015, Texas Instruments Incorporated

5 Pin Configuration and Functions

TL082 FK Package
20-Pin LCCC
Top View

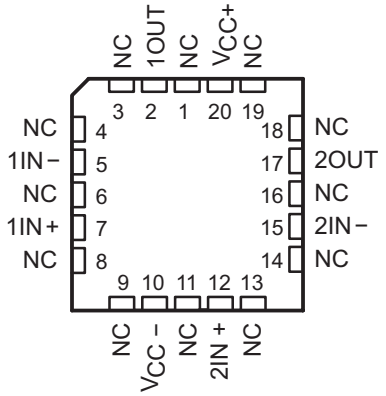

TL084 FK Package
20-Pin LCCC
Top View

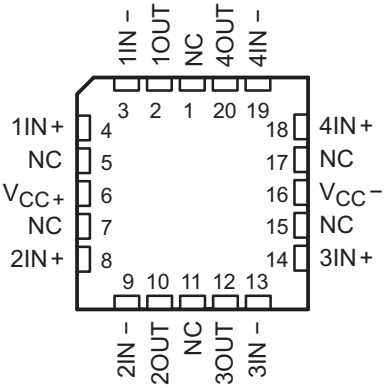

TL081 and TL081x D, P, and PS Package
8-Pin SOIC, PDIP, and SO
Top View

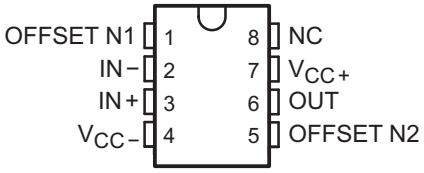

TL082 and TL082x D, JG, P, PS and PW Package
8-Pin SOIC, CDIP, PDIP, SO, and TSSOP
Top View

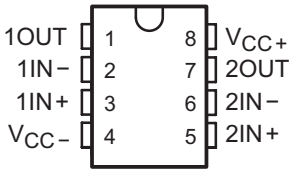

TL084 and TL084x D, J, N, NS and PW Package
14-Pin SOIC, CDIP, PDIP, SO, and TSSOP
Top View

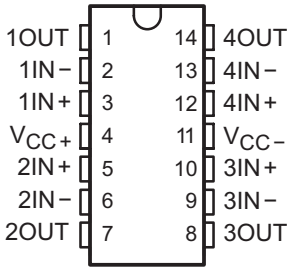

Pin Functions

PIN						I/O	DESCRIPTION
NAME	TL081	TL082		TL084			
	SOIC, PDIP, SO	SOIC, CDIP, PDIP, SO, TSSOP	LCCC	SOIC, CDIP, PDIP, SO, TSSOP	LCCC		
1IN–	—	2	5	2	3	I	Negative input
1IN+	—	3	7	3	4	I	Positive input
1OUT	—	1	2	1	2	O	Output
2IN–	—	6	15	6	9	I	Negative input
2IN+	—	5	12	5	8	I	Positive input
2OUT	—	7	17	7	10	O	Output
3IN–	—	—	—	9	13	I	Negative input
3IN+	—	—	—	10	14	I	Positive input
3OUT	—	—	—	8	12	O	Output
4IN–	—	—	—	13	19	I	Negative input
4IN+	—	—	—	12	18	I	Positive input
4OUT	—	—	—	14	20	O	Output

Copyright © 1977–2015, Texas Instruments Incorporated

Pin Functions (continued)

PIN						I/O	DESCRIPTION
NAME	TL081	TL082		TL084			
	SOIC, PDIP, SO	SOIC, CDIP, PDIP, SO, TSSOP	LCCC	SOIC, CDIP, PDIP, SO, TSSOP	LCCC		
IN–	2	—	—	—	—	I	Negative input
IN+	3	—	—	—	—	I	Positive input
NC	8	—	1	—	1	—	Do not connect
			3				
			4		5		
			6				
			8		7		
			9				
			11		11		
			13				
			14		15		
			16				
			18		17		
OFFSET N1	1	—	—	—	—	—	Input offset adjustment
OFFSET N2	5	—	—	—	—	—	Input offset adjustment
OUT	6	—	—	—	—	O	Output
V_{CC-}	4	4	10	11	16	—	Power supply
V_{CC+}	7	8	20	4	6	—	Power supply

Copyright © 1977–2015, Texas Instruments Incorporated

6 Specifications

6.1 Absolute Maximum Ratings

over operating free-air temperature range (unless otherwise noted)(1)

				MIN	MAX	UNIT
V_{CC+}	Supply voltage(2)				18	V
V_{CC-}					–18	
V_{ID}	Differential input voltage(3)				±30	V
V_I	Input voltage(2)(4)				±15	V
	Duration of output short circuit(5)			Unlimited		
	Continuous total power dissipation			See *Dissipation Rating Table*		
T_A	Operating free-air temperature		TL08_C TL08_AC TL08_BC	0	70	°C
			TL08_I	–40	85	
			TL084Q	–40	125	
			TL08_M	–55	125	
	Operating virtual junction temperature				150	°C
T_C	Case temperature for 60 seconds	FK package	TL08_M		260	°C
	Lead temperature 1,6 mm (1/16 inch) from case for 10 seconds	J or JG package	TL08_M		300	°C
T_{stg}	Storage temperature			–65	150	°C

(1) Stresses beyond those listed under *Absolute Maximum Ratings* may cause permanent damage to the device. These are stress ratings only, and functional operation of the device at these or any other conditions beyond those indicated under *Recommended Operating Conditions* is not implied. Exposure to absolute-maximum-rated conditions for extended periods may affect device reliability.
(2) All voltage values, except differential voltages, are with respect to the midpoint between V_{CC+} and V_{CC-}.
(3) Differential voltages are at IN+, with respect to IN−.
(4) The magnitude of the input voltage must never exceed the magnitude of the supply voltage or 15 V, whichever is less.
(5) The output may be shorted to ground or to either supply. Temperature and/or supply voltages must be limited to ensure that the dissipation rating is not exceeded.

6.2 ESD Ratings

			VALUE	UNIT
$V_{(ESD)}$	Electrostatic discharge	Human body model (HBM), per ANSI/ESDA/JEDEC JS-001(1)	1000	V
		Charged-device model (CDM), per JEDEC specification JESD22-C101(2)	1500	

(1) JEDEC document JEP155 states that 500-V HBM allows safe manufacturing with a standard ESD control process.
(2) JEDEC document JEP157 states that 250-V CDM allows safe manufacturing with a standard ESD control process.

6.3 Recommended Operating Conditions

over operating free-air temperature range (unless otherwise noted)

			MIN	MAX	UNIT
V_{CC+}	Supply voltage		5	15	V
V_{CC-}	Supply voltage		–5	–15	V
V_{CM}	Common-mode voltage		V_{CC-} + 4	V_{CC+} – 4	V
T_A	Ambient temperature	TL08xM	–55	125	°C
		TL08xQ	–40	125	
		TL08xI	–40	85	
		TL08xC	0	70	

Copyright © 1977–2015, Texas Instruments Incorporated

6.4 Thermal Information

THERMAL METRIC[1]		TL08xx								UNIT
		D (SOIC)		N (PDIP)	NS (SO)	P (PDIP)	PS (SO)	PW (TSSOP)		
		8 PINS	14 PINS	14 PINS	14 PINS	{PIN COUNT} PINS	{PIN COUNT} PINS	8 PINS	14 PINS	
$R_{\theta JA}$	Junction-to-ambient thermal resistance[2][3]	97	86	76	80	85	95	149	113	°C/W

(1) For more information about traditional and new thermal metrics, see the *Semiconductor and IC Package Thermal Metrics* application report, SPRA953.
(2) Maximum power dissipation is a function of $T_{J(max)}$, $R_{\theta JA}$, and T_A. The maximum allowable power dissipation at any allowable ambient temperature is $P_D = (T_{J(max)} – T_A) / R_{\theta JA}$. Operating at the absolute maximum T_J of 150°C can affect reliability.
(3) The package thermal impedance is calculated in accordance with JESD 51-7.

6.5 Electrical Characteristics for TL08xC, TL08xxC, and TL08xI

$V_{CC±}$ = ±15 V (unless otherwise noted)

PARAMETER		TEST CONDITIONS	T_A[1]	TL081C, TL082C, TL084C			TL081AC, TL082AC, TL084AC			TL081BC, TL082BC, TL084BC			TL081I, TL082I, TL084I			UNIT
				MIN	TYP	MAX	MIN	TYP	MAX	MIN	TYP	MAX	MIN	TYP	MAX	
V_{IO}	Input offset voltage	V_O = 0, R_S = 50 Ω	25°C		3	15		3	6		2	3		3	6	mV
			Full range			20			7.5			5			9	
α_{VIO}	Temperature coefficient of input offset voltage	V_O = 0, R_S = 50 Ω	Full range		18			18			18			18		µV/°C
I_{IO}	Input offset current[2]	V_O = 0	25°C		5	200		5	100		5	100		5	100	pA
			Full range			2			2			2			10	nA
I_{IB}	Input bias current[2]	V_O = 0	25°C		30	400		30	200		30	200		30	200	pA
			Full range			10			7			7			20	nA
V_{ICR}	Common-mode input voltage range		25°C	±11	–12 to 15		±11	–12 to 15		±11	–12 to 15		±11	–12 to 15		V
V_{OM}	Maximum peak output voltage swing	R_L = 10 kΩ	25°C	±12	±13.5		±12	±13.5		±12	±13.5		±12	±13.5		V
		R_L ≥ 10 kΩ	Full range	±12			±12			±12			±12			
		R_L ≥ 2 kΩ		±10	±12		±10	±12		±10	±12		±10	±12		
A_{VD}	Large-signal differential voltage amplification	V_O = ±10 V, R_L ≥ 2 kΩ	25°C	25	200		50	200		50	200		50	200		V/mV
			Full range	15			15			25			25			
B_1	Unity-gain bandwidth		25°C		3			3			3			3		MHz
r_i	Input resistance		25°C		10^{12}			10^{12}			10^{12}			10^{12}		Ω
CMRR	Common-mode rejection ratio	V_{IC} = V_{ICR}min, V_O = 0, R_S = 50 Ω	25°C	70	86		75	86		75	86		75	86		dB
k_{SVR}	Supply-voltage rejection ratio ($\Delta V_{CC±}/\Delta V_{IO}$)	V_{CC} = ±15 V to ±9 V, V_O = 0, R_S = 50 Ω	25°C	70	86		80	86		80	86		80	86		dB

(1) All characteristics are measured under open-loop conditions with zero common-mode voltage, unless otherwise specified. Full range for T_A is 0°C to 70°C for TL08_C, TL08_AC, TL08_BC and –40°C to 85°C for TL08_I.
(2) Input bias currents of an FET-input operational amplifier are normal junction reverse currents, which are temperature sensitive, as shown in Figure 13. Pulse techniques must be used that maintain the junction temperature as close to the ambient temperature as possible.

Copyright © 1977–2015, Texas Instruments Incorporated

Electrical Characteristics for TL08xC, TL08xxC, and TL08xI (continued)

$V_{CC\pm}$ = ±15 V (unless otherwise noted)

PARAMETER		TEST CONDITIONS	T_A (1)	TL081C, TL082C, TL084C			TL081AC, TL082AC, TL084AC			TL081BC, TL082BC, TL084BC			TL081I, TL082I, TL084I			UNIT
				MIN	TYP	MAX	MIN	TYP	MAX	MIN	TYP	MAX	MIN	TYP	MAX	
I_{CC}	Supply current (each amplifier)	V_O = 0, No load	25°C		1.4	2.8		1.4	2.8		1.4	2.8		1.4	2.8	mA
V_{O1}/V_{O2}	Crosstalk attenuation	A_{VD} = 100	25°C		120			120			120			120		dB

6.6 Electrical Characteristics for TL08xM and TL084x

$V_{CC\pm}$ = ±15 V (unless otherwise noted)

PARAMETER		TEST CONDITIONS (1)	T_A	TL081M, TL082M			TL084Q, TL084M			UNIT
				MIN	TYP	MAX	MIN	TYP	MAX	
V_{IO}	Input offset voltage	V_O = 0, R_S = 50 Ω	25°C		3	6		3	9	mV
			Full range			9			15	
α_{VIO}	Temperature coefficient of input offset voltage	V_O = 0, R_S = 50 Ω	Full range		18			18		µV/°C
I_{IO}	Input offset current (2)	V_O = 0	25°C		5	100		5	100	pA
			125°C			20			20	nA
I_{IB}	Input bias current (2)	V_O = 0	25°C		30	200		30	200	pA
			125°C			50			50	nA
V_{ICR}	Common-mode input voltage range		25°C	±11	–12 to 15		±11	–12 to 15		V
V_{OM}	Maximum peak output voltage swing	R_L = 10 kΩ	25°C	±12	±13.5		±12	±13.5		V
		R_L ≥ 10 kΩ	Full range	±12			±12			
		R_L ≥ 2 kΩ		±10	±12		±10	±12		
A_{VD}	Large-signal differential voltage amplification	V_O = ±10 V, R_L ≥ 2 kΩ	25°C	25	200		25	200		V/mV
			Full range	15			15			
B_1	Unity-gain bandwidth		25°C		3			3		MHz
r_i	Input resistance		25°C		10^{12}			10^{12}		Ω
CMRR	Common-mode rejection ratio	V_{IC} = V_{ICR}min, V_O = 0, R_S = 50 Ω	25°C	80	86		80	86		dB
k_{SVR}	Supply-voltage rejection ratio ($\Delta V_{CC\pm}/\Delta V_{IO}$)	V_{CC} = ±15 V to ±9 V, V_O = 0, R_S = 50 Ω	25°C	80	86		80	86		dB
I_{CC}	Supply current (each amplifier)	V_O = 0, No load	25°C		1.4	2.8		1.4	2.8	mA
V_{O1}/V_{O2}	Crosstalk attenuation	A_{VD} = 100	25°C		120			120		dB

(1) All characteristics are measured under open-loop conditions, with zero common-mode input voltage, unless otherwise specified.
(2) Input bias currents of a FET-input operational amplifier are normal junction reverse currents, which are temperature sensitive, as shown in Figure 13. Pulse techniques must be used that maintain the junction temperatures as close to the ambient temperature as possible.

6.7 Operating Characteristics

$V_{CC\pm}$ = ±15 V, T_A= 25°C (unless otherwise noted)

PARAMETER		TEST CONDITIONS	MIN	TYP	MAX	UNIT
SR	Slew rate at unity gain	V_I = 10 V, R_L = 2 kΩ, C_L = 100 pF, See Figure 19	8 (1)	13		V/µs
		V_I = 10 V, R_L = 2 kΩ, C_L = 100 pF, T_A = − 55°C to 125°C, See Figure 19	5 (1)			

(1) On products compliant to MIL-PRF-38535, this parameter is not production tested.

Copyright © 1977–2015, Texas Instruments Incorporated

Operating Characteristics (continued)

$V_{CC\pm}$ = ±15 V, T_A= 25°C (unless otherwise noted)

PARAMETER		TEST CONDITIONS		MIN	TYP	MAX	UNIT
t_r	Rise-time	V_I = 20 V, R_L = 2 kΩ, C_L = 100 pF, See Figure 19			0.05		µs
	overshoot factor				20%		
V_n	Equivalent input noise voltage	R_S = 20 Ω	f = 1 kHz		18		nV/√Hz
			f = 10 Hz to 10 kHz		4		µV
I_n	Equivalent input noise current	R_S = 20 Ω,	f = 1 kHz		0.01		pA/√Hz
THD	Total harmonic distortion	$V_I$rms = 6 V, A_{VD} = 1, R_S ≤ 1 kΩ, R_L ≥ 2 kΩ, f = 1 kHz,			0.003%		

6.8 Dissipation Rating Table

PACKAGE	T_A ≤ 25°C POWER RATING	DERATING FACTOR	DERATE ABOVE T_A	T_A = 70°C POWER RATING	T_A = 85°C POWER RATING	T_A = 125°C POWER RATING
D (14 pin)	680 mW	7.6 mW/°C	60°C	604 m/W	490 mW	186 mW
FK	680 mW	11.0 mW/°C	88°C	680 m/W	680 mW	273 mW
J	680 mW	11.0 mW/°C	88°C	680 m/W	680 mW	273 mW
JG	680 mW	8.4 mW/°C	69°C	672 m/W	546 mW	210 mW

Copyright © 1977–2015, Texas Instruments Incorporated

6.9 Typical Characteristics

Data at high and low temperatures are applicable only within the rated operating free-air temperature ranges of the various devices. The Figure numbers referenced in the following graphs are located in *Parameter Measurement Information*.

Table 1. Table of Graphs

			Figure
V_{OM}	Maximum peak output voltage	versus Frequency versus Free-air temperature versus Load resistance versus Supply voltage	Figure 1, Figure 2, Figure 3 Figure 4 Figure 5 Figure 6
A_{VD}	Large-signal differential voltage amplification	versus Free-air temperature versus Load resistance	Figure 7 Figure 8
	Differential voltage amplification	versus Frequency with feed-forward compensation	Figure 9
P_D	Total power dissipation	versus Free-air temperature	Figure 10
I_{CC}	Supply current	versus Free-air temperature versus Supply voltage	Figure 11 Figure 12
I_{IB}	Input bias current	versus Free-air temperature	Figure 13
	Large-signal pulse response	versus Time	Figure 14
V_O	Output voltage	versus Elapsed time	Figure 15
CMRR	Common-mode rejection ratio	versus Free-air temperature	Figure 16
V_n	Equivalent input noise voltage	versus Frequency	Figure 17
THD	Total harmonic distortion	versus Frequency	Figure 18

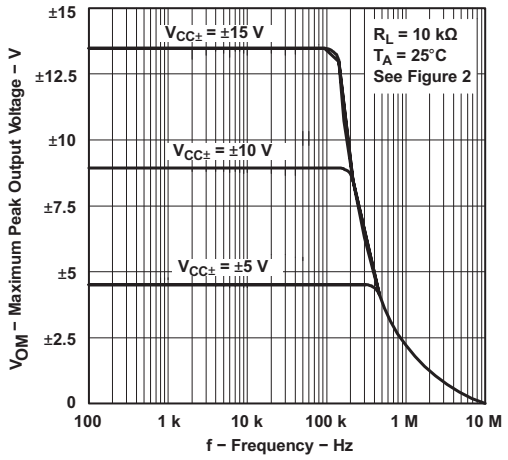

Figure 1. Maximum Peak Output Voltage vs Frequency

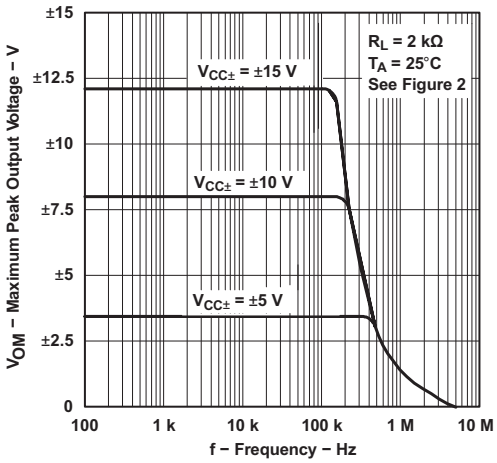

Figure 2. Maximum Peak Output Voltage vs Frequency

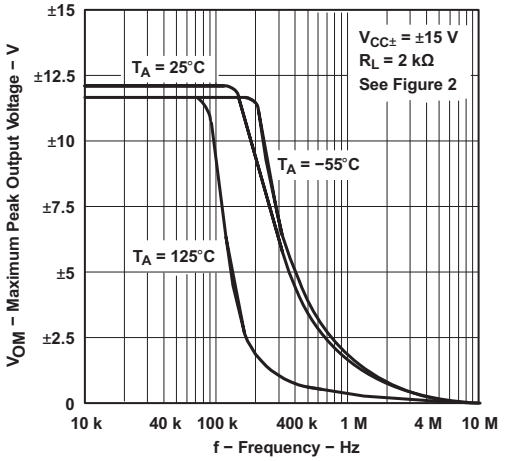

Figure 3. Maximum Peak Voltage vs Frequency

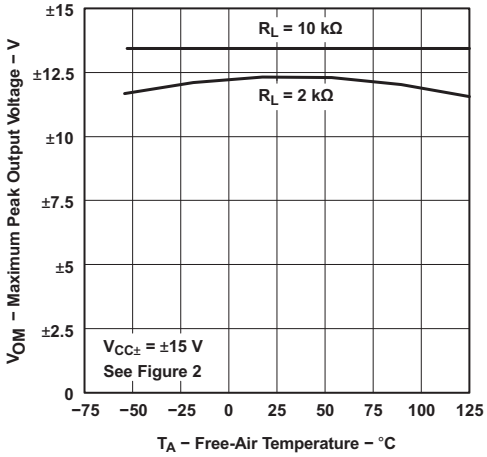

Figure 4. Maximum Peak Output Voltage vs Free-Air Temperature

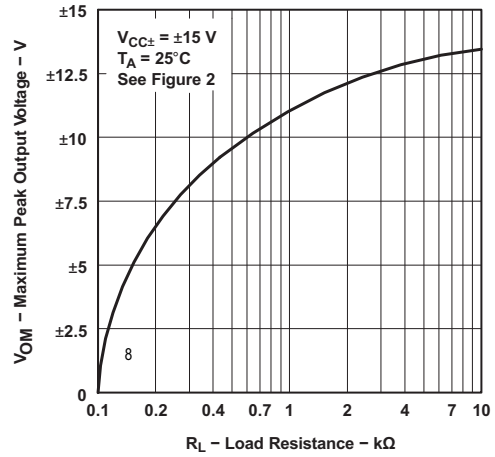

Figure 5. Maximum Peak Output Voltage vs Load Resistance

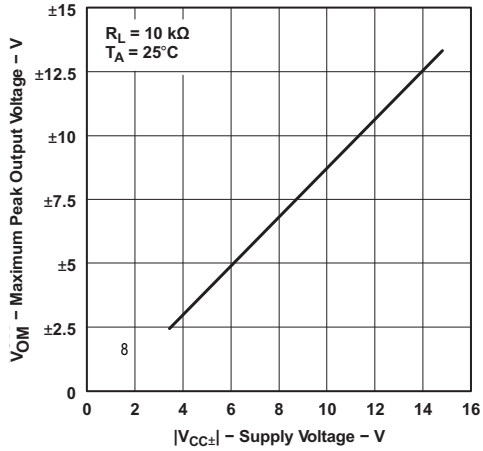

Figure 6. Maximum Peak Output Voltage vs Supply Voltage

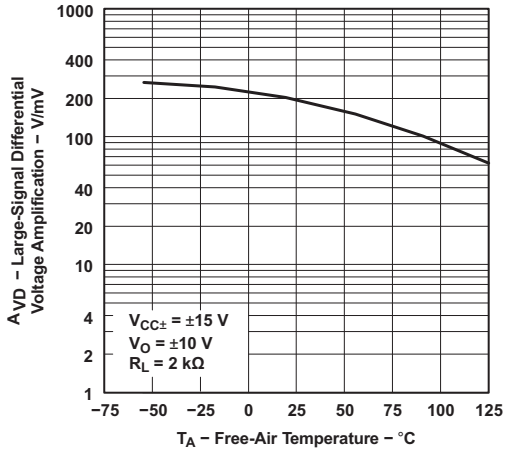

Figure 7. Large-Signal Differential Voltage Amplification vs Free-Air Temperature

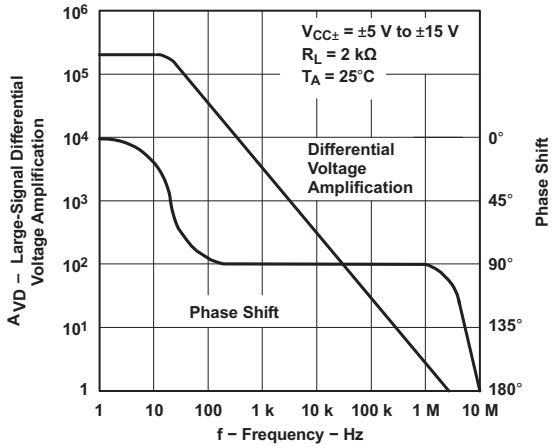

Figure 8. Large-Signal Differential Voltage Amplification and Phase Shift vs Frequency

Copyright © 1977–2015, Texas Instruments Incorporated

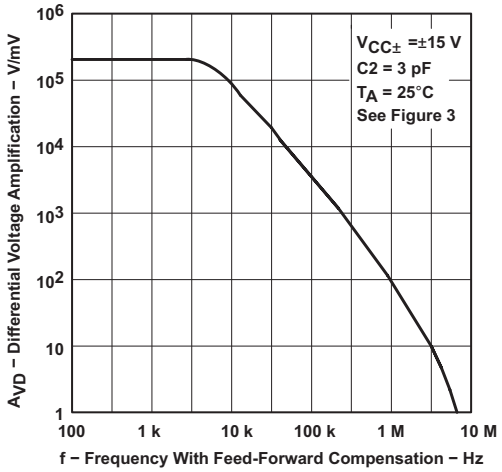

Figure 9. Differential Voltage Amplification vs Frequency with Feed-Forward Compensation

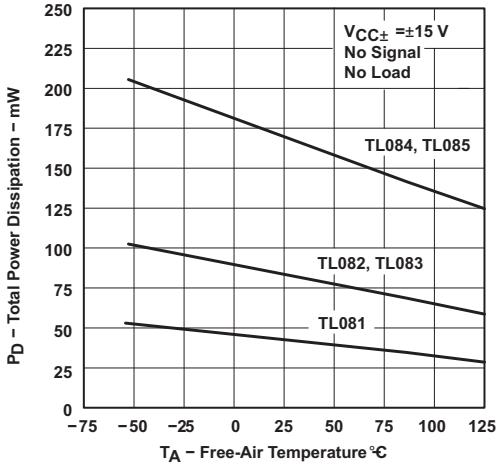

Figure 10. Total Power Dissipation vs Free-Air Temperature

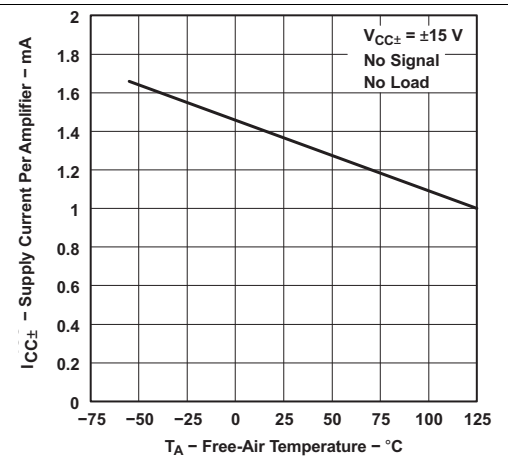

Figure 11. Supply Current per Amplifier vs Free-Air Temperature

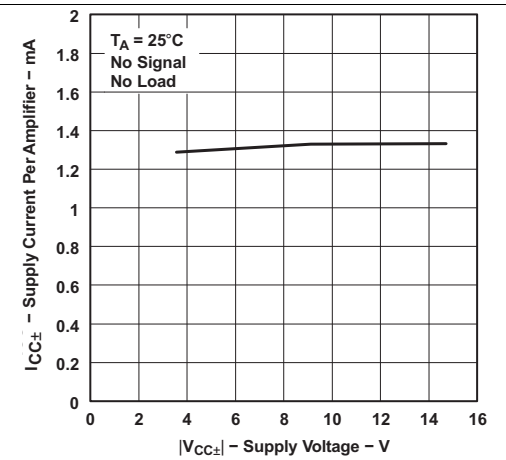

Figure 12. Supply Current per Amplifier vs Supply Voltage

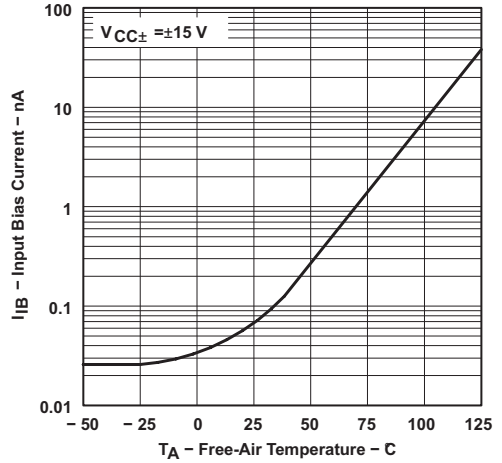

Figure 13. Input Bias Current vs Free-Air Temperature

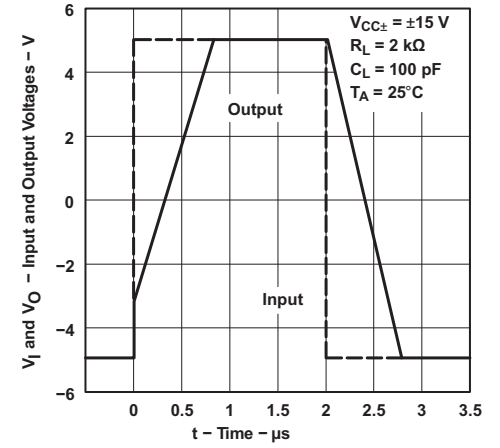

Figure 14. Voltage-Follower Large-Signal Pulse Response

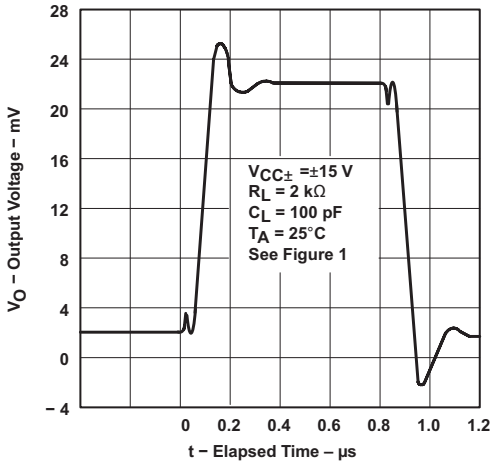

Figure 15. Output Voltage vs Elapsed Time

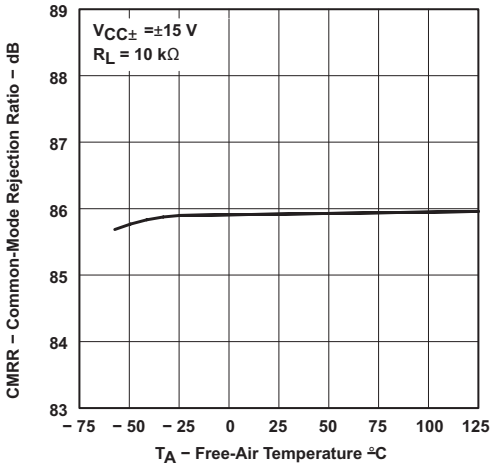

Figure 16. Common-Mode Rejection Ratio vs Free-Air Temperature

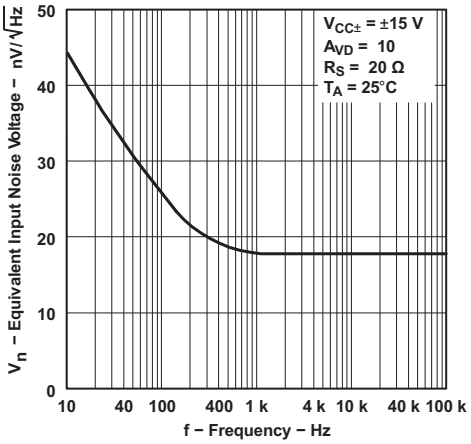

Figure 17. Equivalent Input Noise Voltage vs Frequency

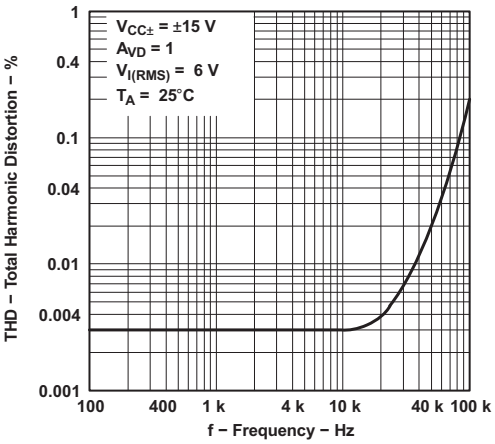

Figure 18. Total Harmonic Distortion vs Frequency

Copyright © 1977–2015, Texas Instruments Incorporated

7 Parameter Measurement Information

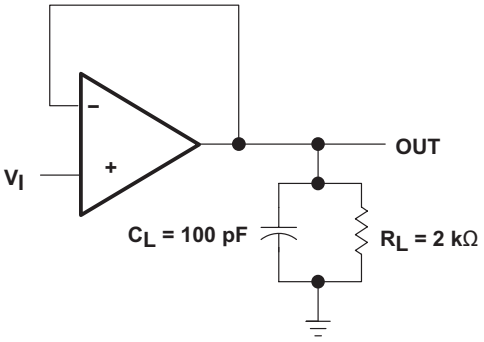

Figure 19. Test Figure 1

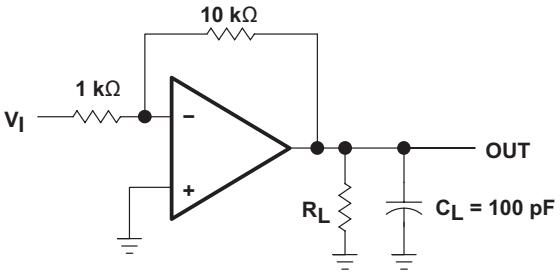

Figure 20. Test Figure 2

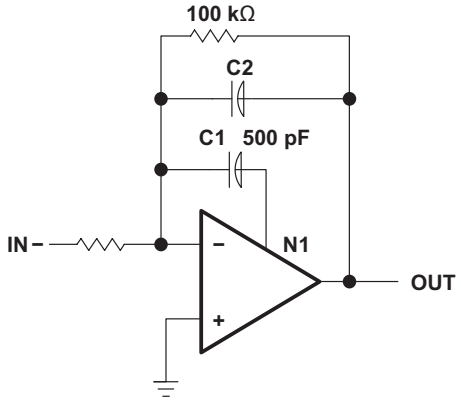

Figure 21. Test Figure 3

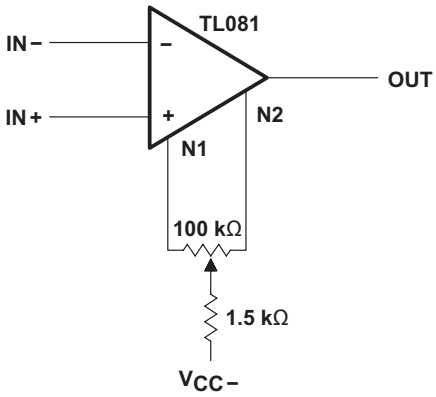

Figure 22. Test Figure 4

8 Detailed Description

8.1 Overview

The TL08xx JFET-input operational amplifier family is designed to offer a wider selection than any previously developed operational amplifier family. Each of these JFET-input operational amplifiers incorporates well-matched, high-voltage JFET and bipolar transistors in a monolithic integrated circuit. The devices feature high slew rates, low input bias and offset currents, and low offset-voltage temperature coefficient. Offset adjustment and external compensation options are available within the TL08xx family.

The C-suffix devices are characterized for operation from 0°C to 70°C. The I-suffix devices are characterized for operation from −40°C to 85°C. The Q-suffix devices are characterized for operation from –40°C to +125°C. The M-suffix devices are characterized for operation over the full military temperature range of −55°C to +125°C.

8.2 Functional Block Diagram

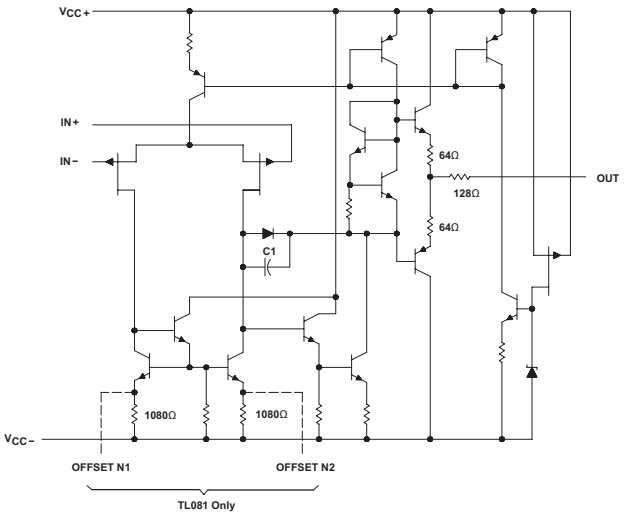

8.3 Feature Description

8.3.1 Total Harmonic Distortion

Harmonic distortions to an audio signal are created by electronic components in a circuit. Total harmonic distortion (THD) is a measure of harmonic distortions accumulated by a signal in an audio system. These devices have a very low THD of 0.003% meaning that the TL08x devices will add little harmonic distortion when used in audio signal applications.

8.3.2 Slew Rate

The slew rate is the rate at which an operational amplifier can change its output when there is a change on the input. These devices have a 13-V/µs slew rate.

8.4 Device Functional Modes

These devices are powered on when the supply is connected. This device can be operated as a single-supply operational amplifier or dual-supply amplifier depending on the application.

Copyright © 1977–2015, Texas Instruments Incorporated

9 Applications and Implementation

NOTE

Information in the following applications sections is not part of the TI component specification, and TI does not warrant its accuracy or completeness. TI's customers are responsible for determining suitability of components for their purposes. Customers should validate and test their design implementation to confirm system functionality.

9.1 Application Information

The TL08x series of operational amplifiers can be used in countless applications. The few applications in this section show principles used in all applications of these parts.

9.2 Typical Applications

9.2.1 Inverting Amplifier Application

A typical application for an operational amplifier in an inverting amplifier. This amplifier takes a positive voltage on the input, and makes it a negative voltage of the same magnitude. In the same manner, it also makes negative voltages positive.

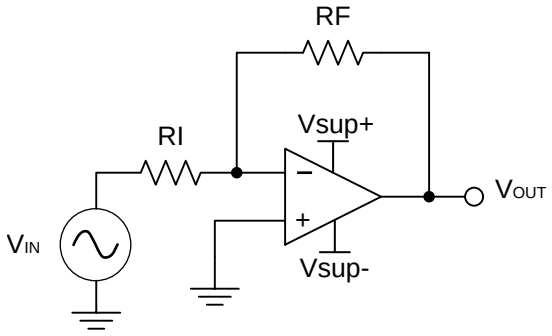

Figure 23. Schematic for Inverting Amplifier Application

9.2.1.1 Design Requirements

The supply voltage must be chosen such that it is larger than the input voltage range and output range. For instance, this application will scale a signal of ±0.5 V to ±1.8 V. Setting the supply at ±12 V is sufficient to accommodate this application.

9.2.1.2 Detailed Design Procedure

Determine the gain required by the inverting amplifier:

$$A_v = \frac{VOUT}{VIN} \tag{1}$$

$$A_v = \frac{1.8}{-0.5} = -3.6 \tag{2}$$

Once the desired gain is determined, choose a value for RI or RF. Choosing a value in the kΩ range is desirable because the amplifier circuit will use currents in the milliamp range. This ensures the part will not draw too much current. This example will choose 10 kΩ for RI which means 36 kΩ will be used for RF. This was determined by Equation 3.

$$A_v = -\frac{RF}{RI} \tag{3}$$

Copyright © 1977–2015, Texas Instruments Incorporated

Typical Applications (continued)

9.2.1.3 Application Curve

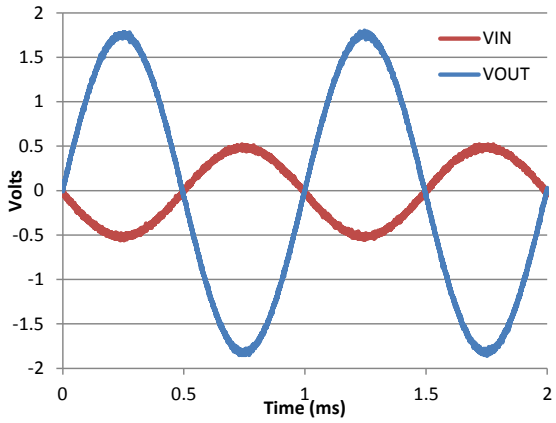

Figure 24. Input and output voltages of the inverting amplifier

9.3 System Examples

9.3.1 General Applications

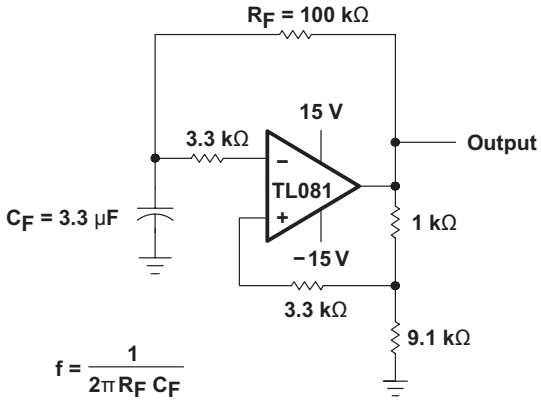

Figure 25. 0.5-Hz Square-Wave Oscillator

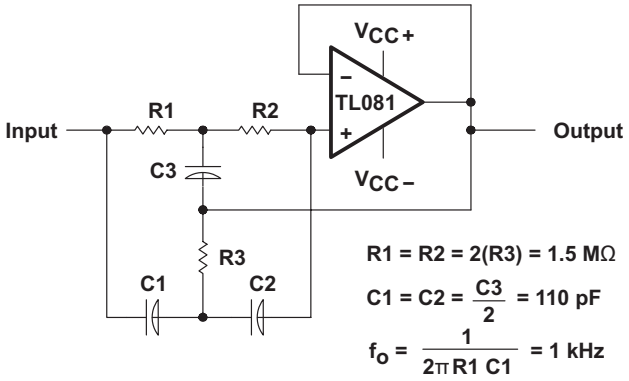

Figure 26. High-Q Notch Filter

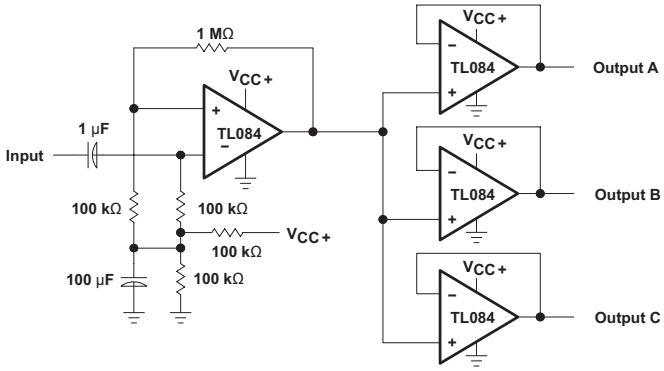

Figure 27. Audio-Distribution Amplifier

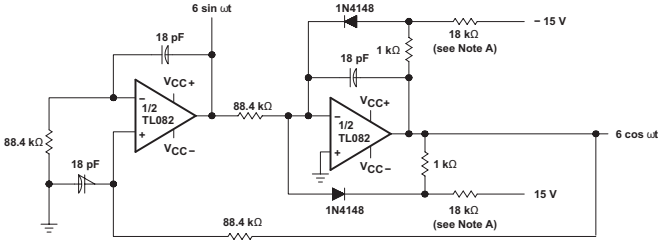

A. These resistor values may be adjusted for a symmetrical output.

Figure 28. 100-kHz Quadrature Oscillator

Copyright © 1977–2015, Texas Instruments Incorporated

System Examples (continued)

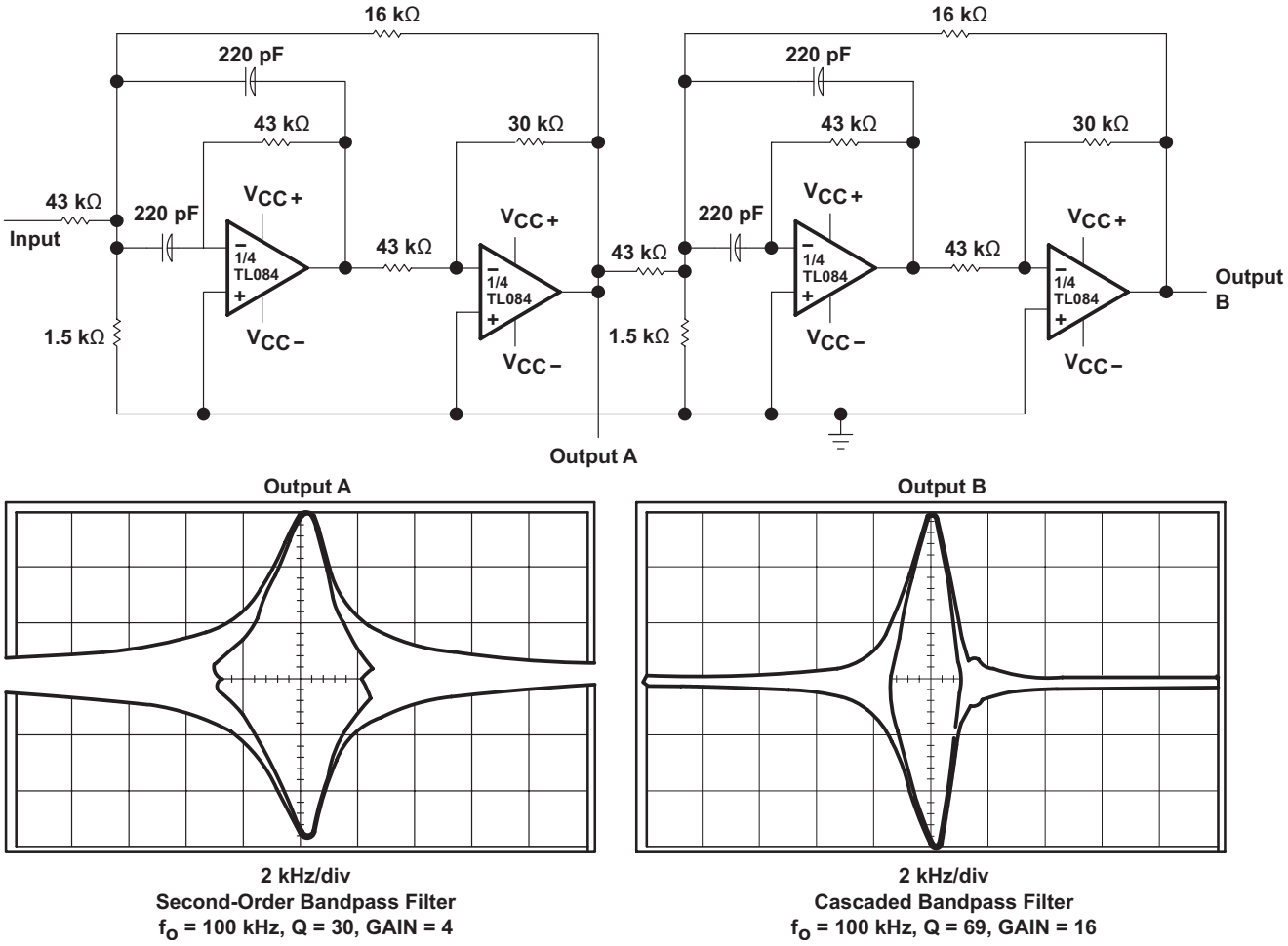

Figure 29. Positive-Feedback Bandpass Filter

10 Power Supply Recommendations

CAUTION

Supply voltages larger than 36 V for a single-supply or outside the range of ±18 V for a dual-supply can permanently damage the device (see the *Absolute Maximum Ratings*).

Place 0.1-µF bypass capacitors close to the power-supply pins to reduce errors coupling in from noisy or high impedance power supplies. For more detailed information on bypass capacitor placement, refer to the *Layout*.

11 Layout

11.1 Layout Guidelines

For best operational performance of the device, use good PCB layout practices, including:

- Noise can propagate into analog circuitry through the power pins of the circuit as a whole, as well as the operational amplifier. Bypass capacitors are used to reduce the coupled noise by providing low impedance power sources local to the analog circuitry.
  - Connect low-ESR, 0.1-µF ceramic bypass capacitors between each supply pin and ground, placed as close to the device as possible. A single bypass capacitor from V+ to ground is applicable for single-supply applications.
- Separate grounding for analog and digital portions of circuitry is one of the simplest and most-effective methods of noise suppression. One or more layers on multilayer PCBs are usually devoted to ground planes. A ground plane helps distribute heat and reduces EMI noise pickup. Make sure to physically separate digital and analog grounds, paying attention to the flow of the ground current. For more detailed information, refer to *Circuit Board Layout Techniques*, (SLOA089).
- To reduce parasitic coupling, run the input traces as far away from the supply or output traces as possible. If it is not possible to keep them separate, it is much better to cross the sensitive trace perpendicular as opposed to in parallel with the noisy trace.
- Place the external components as close to the device as possible. Keeping RF and RG close to the inverting input minimizes parasitic capacitance, as shown in *Layout Examples*.
- Keep the length of input traces as short as possible. Always remember that the input traces are the most sensitive part of the circuit.
- Consider a driven, low-impedance guard ring around the critical traces. A guard ring can significantly reduce leakage currents from nearby traces that are at different potentials.

Copyright © 1977–2015, Texas Instruments Incorporated

11.2 Layout Examples

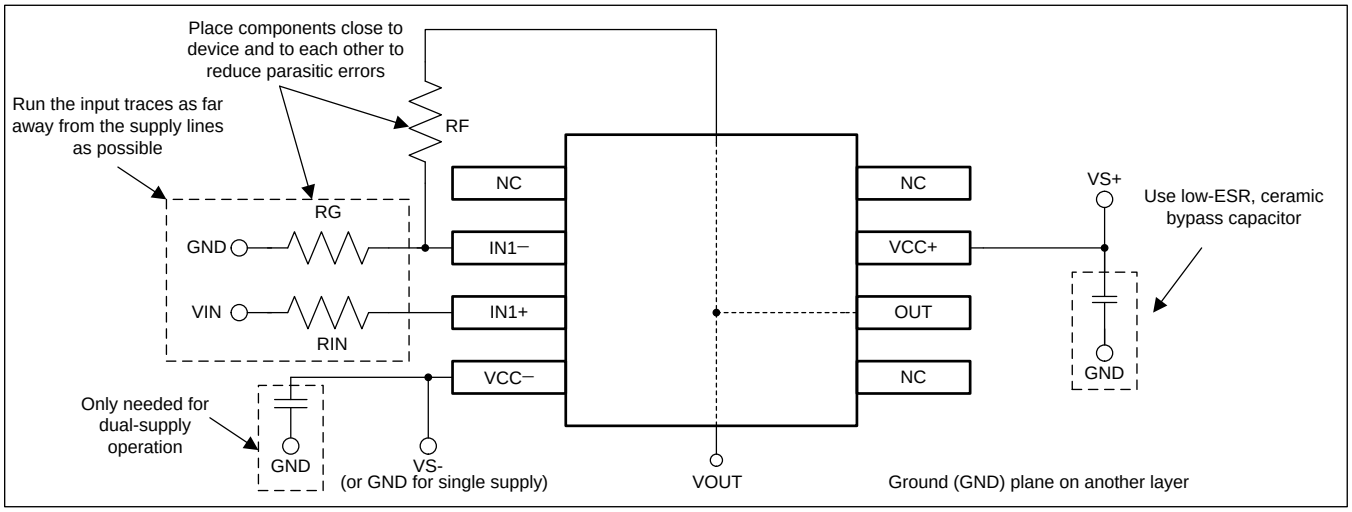

Figure 30. Operational Amplifier Board Layout for Noninverting Configuration

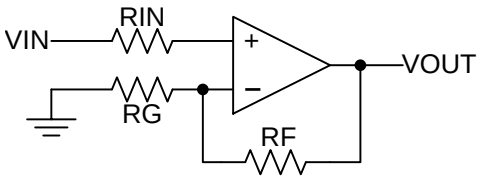

Figure 31. Operational Amplifier Schematic for Noninverting Configuration

Copyright © 1977–2015, Texas Instruments Incorporated

12 Device and Documentation Support

12.1 Documentation Support

12.1.1 Related Documentation

For more information, see the following:

- *Circuit Board Layout Techniques*, SLOA089.

12.2 Related Links

The table below lists quick access links. Categories include technical documents, support and community resources, tools and software, and quick access to sample or buy.

Table 2. Related Links

PARTS	PRODUCT FOLDER	SAMPLE & BUY	TECHNICAL DOCUMENTS	TOOLS & SOFTWARE	SUPPORT & COMMUNITY
TL081	Click here	Click here	Click here	Click here	Click here
TL081A	Click here	Click here	Click here	Click here	Click here
TL081B	Click here	Click here	Click here	Click here	Click here
TL082	Click here	Click here	Click here	Click here	Click here
TL082A	Click here	Click here	Click here	Click here	Click here
TL082B	Click here	Click here	Click here	Click here	Click here
TL084	Click here	Click here	Click here	Click here	Click here
TL084A	Click here	Click here	Click here	Click here	Click here
TL084B	Click here	Click here	Click here	Click here	Click here

12.3 Community Resources

The following links connect to TI community resources. Linked contents are provided "AS IS" by the respective contributors. They do not constitute TI specifications and do not necessarily reflect TI's views; see TI's Terms of Use.

TI E2E™ Online Community ***TI's Engineer-to-Engineer (E2E) Community.*** Created to foster collaboration among engineers. At e2e.ti.com, you can ask questions, share knowledge, explore ideas and help solve problems with fellow engineers.

Design Support ***TI's Design Support*** Quickly find helpful E2E forums along with design support tools and contact information for technical support.

12.4 Trademarks

E2E is a trademark of Texas Instruments.
All other trademarks are the property of their respective owners.

12.5 Electrostatic Discharge Caution



These devices have limited built-in ESD protection. The leads should be shorted together or the device placed in conductive foam during storage or handling to prevent electrostatic damage to the MOS gates.

12.6 Glossary

SLYZ022 — *TI Glossary*.

This glossary lists and explains terms, acronyms, and definitions.

13 Mechanical, Packaging, and Orderable Information

The following pages include mechanical, packaging, and orderable information. This information is the most current data available for the designated devices. This data is subject to change without notice and revision of this document. For browser-based versions of this data sheet, refer to the left-hand navigation.

Copyright © 1977–2015, Texas Instruments Incorporated

PACKAGING INFORMATION

Orderable Device	Status (1)	Package Type	Package Drawing	Pins	Package Qty	Eco Plan (2)	Lead/Ball Finish (6)	MSL Peak Temp (3)	Op Temp (°C)	Device Marking (4/5)	Samples
5962-9851501Q2A	ACTIVE	LCCC	FK	20	1	TBD	POST-PLATE	N / A for Pkg Type	-55 to 125	5962-9851501Q2A TL082MFKB	Samples
5962-9851501QPA	ACTIVE	CDIP	JG	8	1	TBD	A42	N / A for Pkg Type	-55 to 125	9851501QPA TL082M	Samples
5962-9851503Q2A	ACTIVE	LCCC	FK	20	1	TBD	POST-PLATE	N / A for Pkg Type	-55 to 125	5962-9851503Q2A TL084 MFKB	Samples
5962-9851503QCA	ACTIVE	CDIP	J	14	1	TBD	A42	N / A for Pkg Type	-55 to 125	5962-9851503QC A TL084MJB	Samples
TL081ACD	ACTIVE	SOIC	D	8	75	Green (RoHS & no Sb/Br)	CU NIPDAU	Level-1-260C-UNLIM	0 to 70	081AC	Samples
TL081ACDR	ACTIVE	SOIC	D	8	2500	Green (RoHS & no Sb/Br)	CU NIPDAU	Level-1-260C-UNLIM	0 to 70	081AC	Samples
TL081ACP	ACTIVE	PDIP	P	8	50	Green (RoHS & no Sb/Br)	CU NIPDAU	N / A for Pkg Type	0 to 70	TL081ACP	Samples
TL081BCD	ACTIVE	SOIC	D	8	75	Green (RoHS & no Sb/Br)	CU NIPDAU	Level-1-260C-UNLIM	0 to 70	081BC	Samples
TL081BCDR	ACTIVE	SOIC	D	8	2500	Green (RoHS & no Sb/Br)	CU NIPDAU	Level-1-260C-UNLIM	0 to 70	081BC	Samples
TL081BCP	ACTIVE	PDIP	P	8	50	Green (RoHS & no Sb/Br)	CU NIPDAU	N / A for Pkg Type	0 to 70	TL081BCP	Samples
TL081BCPE4	ACTIVE	PDIP	P	8	50	Green (RoHS & no Sb/Br)	CU NIPDAU	N / A for Pkg Type	0 to 70	TL081BCP	Samples
TL081CD	ACTIVE	SOIC	D	8	75	Green (RoHS & no Sb/Br)	CU NIPDAU	Level-1-260C-UNLIM	0 to 70	TL081C	Samples
TL081CDR	ACTIVE	SOIC	D	8	2500	Green (RoHS & no Sb/Br)	CU NIPDAU	Level-1-260C-UNLIM	0 to 70	TL081C	Samples
TL081CP	ACTIVE	PDIP	P	8	50	Green (RoHS & no Sb/Br)	CU NIPDAU	N / A for Pkg Type	0 to 70	TL081CP	Samples
TL081CPE4	ACTIVE	PDIP	P	8	50	Green (RoHS & no Sb/Br)	CU NIPDAU	N / A for Pkg Type	0 to 70	TL081CP	Samples

Orderable Device	Status (1)	Package Type	Package Drawing	Pins	Package Qty	Eco Plan (2)	Lead/Ball Finish (6)	MSL Peak Temp (3)	Op Temp (°C)	Device Marking (4/5)	Samples
TL081CPSR	ACTIVE	SO	PS	8	2000	Green (RoHS & no Sb/Br)	CU NIPDAU	Level-1-260C-UNLIM	0 to 70	T081	Samples
TL081ID	ACTIVE	SOIC	D	8	75	Green (RoHS & no Sb/Br)	CU NIPDAU	Level-1-260C-UNLIM	-40 to 85	TL081I	Samples
TL081IDR	ACTIVE	SOIC	D	8	2500	Green (RoHS & no Sb/Br)	CU NIPDAU	Level-1-260C-UNLIM	-40 to 85	TL081I	Samples
TL081IP	ACTIVE	PDIP	P	8	50	Green (RoHS & no Sb/Br)	CU NIPDAU	N / A for Pkg Type	-40 to 85	TL081IP	Samples
TL082ACD	ACTIVE	SOIC	D	8	75	Green (RoHS & no Sb/Br)	CU NIPDAU	Level-1-260C-UNLIM	0 to 70	082AC	Samples
TL082ACDE4	ACTIVE	SOIC	D	8	75	Green (RoHS & no Sb/Br)	CU NIPDAU	Level-1-260C-UNLIM	0 to 70	082AC	Samples
TL082ACDG4	ACTIVE	SOIC	D	8	75	Green (RoHS & no Sb/Br)	CU NIPDAU	Level-1-260C-UNLIM	0 to 70	082AC	Samples
TL082ACDR	ACTIVE	SOIC	D	8	2500	Green (RoHS & no Sb/Br)	CU NIPDAU	Level-1-260C-UNLIM	0 to 70	082AC	Samples
TL082ACDRE4	ACTIVE	SOIC	D	8	2500	Green (RoHS & no Sb/Br)	CU NIPDAU	Level-1-260C-UNLIM	0 to 70	082AC	Samples
TL082ACDRG4	ACTIVE	SOIC	D	8	2500	Green (RoHS & no Sb/Br)	CU NIPDAU	Level-1-260C-UNLIM	0 to 70	082AC	Samples
TL082ACP	ACTIVE	PDIP	P	8	50	Pb-Free (RoHS)	CU NIPDAU	N / A for Pkg Type	0 to 70	TL082ACP	Samples
TL082ACPSR	ACTIVE	SO	PS	8	2000	Green (RoHS & no Sb/Br)	CU NIPDAU	Level-1-260C-UNLIM	0 to 70	T082A	Samples
TL082BCD	ACTIVE	SOIC	D	8	75	Green (RoHS & no Sb/Br)	CU NIPDAU	Level-1-260C-UNLIM	0 to 70	082BC	Samples
TL082BCDE4	ACTIVE	SOIC	D	8	75	Green (RoHS & no Sb/Br)	CU NIPDAU	Level-1-260C-UNLIM	0 to 70	082BC	Samples
TL082BCDR	ACTIVE	SOIC	D	8	2500	Green (RoHS & no Sb/Br)	CU NIPDAU	Level-1-260C-UNLIM	0 to 70	082BC	Samples
TL082BCDRE4	ACTIVE	SOIC	D	8	2500	Green (RoHS & no Sb/Br)	CU NIPDAU	Level-1-260C-UNLIM	0 to 70	082BC	Samples
TL082BCDRG4	ACTIVE	SOIC	D	8	2500	Green (RoHS & no Sb/Br)	CU NIPDAU	Level-1-260C-UNLIM	0 to 70	082BC	Samples
TL082BCP	ACTIVE	PDIP	P	8	50	Pb-Free (RoHS)	CU NIPDAU	N / A for Pkg Type	0 to 70	TL082BCP	Samples

Orderable Device	Status (1)	Package Type	Package Drawing	Pins	Package Qty	Eco Plan (2)	Lead/Ball Finish (6)	MSL Peak Temp (3)	Op Temp (°C)	Device Marking (4/5)	Samples
TL082BCPE4	ACTIVE	PDIP	P	8	50	Pb-Free (RoHS)	CU NIPDAU	N / A for Pkg Type	0 to 70	TL082BCP	Samples
TL082CD	ACTIVE	SOIC	D	8	75	Green (RoHS & no Sb/Br)	CU NIPDAU	Level-1-260C-UNLIM	0 to 70	TL082C	Samples
TL082CDE4	ACTIVE	SOIC	D	8	75	Green (RoHS & no Sb/Br)	CU NIPDAU	Level-1-260C-UNLIM	0 to 70	TL082C	Samples
TL082CDR	ACTIVE	SOIC	D	8	2500	Green (RoHS & no Sb/Br)	CU NIPDAU	Level-1-260C-UNLIM	0 to 70	TL082C	Samples
TL082CDRE4	ACTIVE	SOIC	D	8	2500	Green (RoHS & no Sb/Br)	CU NIPDAU	Level-1-260C-UNLIM	0 to 70	TL082C	Samples
TL082CDRG4	ACTIVE	SOIC	D	8	2500	Green (RoHS & no Sb/Br)	CU NIPDAU	Level-1-260C-UNLIM	0 to 70	TL082C	Samples
TL082CP	ACTIVE	PDIP	P	8	50	Green (RoHS & no Sb/Br)	CU NIPDAU	N / A for Pkg Type	0 to 70	TL082CP	Samples
TL082CPSR	ACTIVE	SO	PS	8	2000	Green (RoHS & no Sb/Br)	CU NIPDAU	Level-1-260C-UNLIM	0 to 70	T082	Samples
TL082CPSRG4	ACTIVE	SO	PS	8	2000	Green (RoHS & no Sb/Br)	CU NIPDAU	Level-1-260C-UNLIM	0 to 70	T082	Samples
TL082CPW	ACTIVE	TSSOP	PW	8	150	Green (RoHS & no Sb/Br)	CU NIPDAU	Level-1-260C-UNLIM	0 to 70	T082	Samples
TL082CPWR	ACTIVE	TSSOP	PW	8	2000	Green (RoHS & no Sb/Br)	CU NIPDAU	Level-1-260C-UNLIM	0 to 70	T082	Samples
TL082CPWRG4	ACTIVE	TSSOP	PW	8	2000	Green (RoHS & no Sb/Br)	CU NIPDAU	Level-1-260C-UNLIM	0 to 70	T082	Samples
TL082ID	ACTIVE	SOIC	D	8	75	Green (RoHS & no Sb/Br)	CU NIPDAU	Level-1-260C-UNLIM	-40 to 85	TL082I	Samples
TL082IDG4	ACTIVE	SOIC	D	8	75	Green (RoHS & no Sb/Br)	CU NIPDAU	Level-1-260C-UNLIM	-40 to 85	TL082I	Samples
TL082IDR	ACTIVE	SOIC	D	8	2500	Green (RoHS & no Sb/Br)	CU NIPDAU	Level-1-260C-UNLIM	-40 to 85	TL082I	Samples
TL082IDRE4	ACTIVE	SOIC	D	8	2500	Green (RoHS & no Sb/Br)	CU NIPDAU	Level-1-260C-UNLIM	-40 to 85	TL082I	Samples
TL082IDRG4	ACTIVE	SOIC	D	8	2500	Green (RoHS & no Sb/Br)	CU NIPDAU	Level-1-260C-UNLIM	-40 to 85	TL082I	Samples
TL082IP	ACTIVE	PDIP	P	8	50	Green (RoHS & no Sb/Br)	CU NIPDAU	N / A for Pkg Type	-40 to 85	TL082IP	Samples

Orderable Device	Status (1)	Package Type	Package Drawing	Pins	Package Qty	Eco Plan (2)	Lead/Ball Finish (6)	MSL Peak Temp (3)	Op Temp (°C)	Device Marking (4/5)	Samples
TL082IPE4	ACTIVE	PDIP	P	8	50	Green (RoHS & no Sb/Br)	CU NIPDAU	N / A for Pkg Type	-40 to 85	TL082IP	Samples
TL082IPWR	ACTIVE	TSSOP	PW	8	2000	Green (RoHS & no Sb/Br)	CU NIPDAU	Level-1-260C-UNLIM	-40 to 85	Z082	Samples
TL082MFKB	ACTIVE	LCCC	FK	20	1	TBD	POST-PLATE	N / A for Pkg Type	-55 to 125	5962-9851501Q2A TL082MFKB	Samples
TL082MJG	ACTIVE	CDIP	JG	8	1	TBD	A42	N / A for Pkg Type	-55 to 125	TL082MJG	Samples
TL082MJGB	ACTIVE	CDIP	JG	8	1	TBD	A42	N / A for Pkg Type	-55 to 125	9851501QPA TL082M	Samples
TL084ACD	ACTIVE	SOIC	D	14	50	Green (RoHS & no Sb/Br)	CU NIPDAU	Level-1-260C-UNLIM	0 to 70	TL084AC	Samples
TL084ACDE4	ACTIVE	SOIC	D	14	50	Green (RoHS & no Sb/Br)	CU NIPDAU	Level-1-260C-UNLIM	0 to 70	TL084AC	Samples
TL084ACDR	ACTIVE	SOIC	D	14	2500	Green (RoHS & no Sb/Br)	CU NIPDAU	Level-1-260C-UNLIM	0 to 70	TL084AC	Samples
TL084ACDRE4	ACTIVE	SOIC	D	14	2500	Green (RoHS & no Sb/Br)	CU NIPDAU	Level-1-260C-UNLIM	0 to 70	TL084AC	Samples
TL084ACDRG4	ACTIVE	SOIC	D	14	2500	Green (RoHS & no Sb/Br)	CU NIPDAU	Level-1-260C-UNLIM	0 to 70	TL084AC	Samples
TL084ACN	ACTIVE	PDIP	N	14	25	Green (RoHS & no Sb/Br)	CU NIPDAU	N / A for Pkg Type	0 to 70	TL084ACN	Samples
TL084ACNSR	ACTIVE	SO	NS	14	2000	Green (RoHS & no Sb/Br)	CU NIPDAU	Level-1-260C-UNLIM	0 to 70	TL084A	Samples
TL084BCD	ACTIVE	SOIC	D	14	50	Green (RoHS & no Sb/Br)	CU NIPDAU	Level-1-260C-UNLIM	0 to 70	TL084BC	Samples
TL084BCDR	ACTIVE	SOIC	D	14	2500	Green (RoHS & no Sb/Br)	CU NIPDAU	Level-1-260C-UNLIM	0 to 70	TL084BC	Samples
TL084BCDRG4	ACTIVE	SOIC	D	14	2500	Green (RoHS & no Sb/Br)	CU NIPDAU	Level-1-260C-UNLIM	0 to 70	TL084BC	Samples
TL084BCN	ACTIVE	PDIP	N	14	25	Green (RoHS & no Sb/Br)	CU NIPDAU	N / A for Pkg Type	0 to 70	TL084BCN	Samples
TL084BCNE4	ACTIVE	PDIP	N	14	25	Green (RoHS & no Sb/Br)	CU NIPDAU	N / A for Pkg Type	0 to 70	TL084BCN	Samples
TL084CD	ACTIVE	SOIC	D	14	50	Green (RoHS & no Sb/Br)	CU NIPDAU	Level-1-260C-UNLIM	0 to 70	TL084C	Samples

Orderable Device	Status (1)	Package Type	Package Drawing	Pins	Package Qty	Eco Plan (2)	Lead/Ball Finish (6)	MSL Peak Temp (3)	Op Temp (°C)	Device Marking (4/5)	Samples
TL084CDE4	ACTIVE	SOIC	D	14	50	Green (RoHS & no Sb/Br)	CU NIPDAU	Level-1-260C-UNLIM	0 to 70	TL084C	Samples
TL084CDG4	ACTIVE	SOIC	D	14	50	Green (RoHS & no Sb/Br)	CU NIPDAU	Level-1-260C-UNLIM	0 to 70	TL084C	Samples
TL084CDR	ACTIVE	SOIC	D	14	2500	Green (RoHS & no Sb/Br)	CU NIPDAU	Level-1-260C-UNLIM	0 to 70	TL084C	Samples
TL084CDRE4	ACTIVE	SOIC	D	14	2500	Green (RoHS & no Sb/Br)	CU NIPDAU	Level-1-260C-UNLIM	0 to 70	TL084C	Samples
TL084CDRG4	ACTIVE	SOIC	D	14	2500	Green (RoHS & no Sb/Br)	CU NIPDAU	Level-1-260C-UNLIM	0 to 70	TL084C	Samples
TL084CN	ACTIVE	PDIP	N	14	25	Green (RoHS & no Sb/Br)	CU NIPDAU	N / A for Pkg Type	0 to 70	TL084CN	Samples
TL084CNE4	ACTIVE	PDIP	N	14	25	Green (RoHS & no Sb/Br)	CU NIPDAU	N / A for Pkg Type	0 to 70	TL084CN	Samples
TL084CNSR	ACTIVE	SO	NS	14	2000	Green (RoHS & no Sb/Br)	CU NIPDAU	Level-1-260C-UNLIM	0 to 70	TL084	Samples
TL084CPW	ACTIVE	TSSOP	PW	14	90	Green (RoHS & no Sb/Br)	CU NIPDAU	Level-1-260C-UNLIM	0 to 70	T084	Samples
TL084CPWE4	ACTIVE	TSSOP	PW	14	90	Green (RoHS & no Sb/Br)	CU NIPDAU	Level-1-260C-UNLIM	0 to 70	T084	Samples
TL084CPWR	ACTIVE	TSSOP	PW	14	2000	Green (RoHS & no Sb/Br)	CU NIPDAU	Level-1-260C-UNLIM	0 to 70	T084	Samples
TL084ID	ACTIVE	SOIC	D	14	50	Green (RoHS & no Sb/Br)	CU NIPDAU	Level-1-260C-UNLIM	-40 to 85	TL084I	Samples
TL084IDR	ACTIVE	SOIC	D	14	2500	Green (RoHS & no Sb/Br)	CU NIPDAU	Level-1-260C-UNLIM	-40 to 85	TL084I	Samples
TL084IDRE4	ACTIVE	SOIC	D	14	2500	Green (RoHS & no Sb/Br)	CU NIPDAU	Level-1-260C-UNLIM	-40 to 85	TL084I	Samples
TL084IDRG4	ACTIVE	SOIC	D	14	2500	Green (RoHS & no Sb/Br)	CU NIPDAU	Level-1-260C-UNLIM	-40 to 85	TL084I	Samples
TL084IN	ACTIVE	PDIP	N	14	25	Green (RoHS & no Sb/Br)	CU NIPDAU	N / A for Pkg Type	-40 to 85	TL084IN	Samples
TL084INE4	ACTIVE	PDIP	N	14	25	Green (RoHS & no Sb/Br)	CU NIPDAU	N / A for Pkg Type	-40 to 85	TL084IN	Samples
TL084MFK	ACTIVE	LCCC	FK	20	1	TBD	POST-PLATE	N / A for Pkg Type	-55 to 125	TL084MFK	Samples

Orderable Device	Status (1)	Package Type	Package Drawing	Pins	Package Qty	Eco Plan (2)	Lead/Ball Finish (6)	MSL Peak Temp (3)	Op Temp (°C)	Device Marking (4/5)	Samples
TL084MFKB	ACTIVE	LCCC	FK	20	1	TBD	POST-PLATE	N / A for Pkg Type	-55 to 125	5962-9851503Q2A TL084 MFKB	Samples
TL084MJ	ACTIVE	CDIP	J	14	1	TBD	A42	N / A for Pkg Type	-55 to 125	TL084MJ	Samples
TL084MJB	ACTIVE	CDIP	J	14	1	TBD	A42	N / A for Pkg Type	-55 to 125	5962-9851503QCA TL084MJB	Samples
TL084QD	ACTIVE	SOIC	D	14	50	Green (RoHS & no Sb/Br)	CU NIPDAU	Level-1-260C-UNLIM	-40 to 125	TL084Q	Samples
TL084QDG4	ACTIVE	SOIC	D	14	50	Green (RoHS & no Sb/Br)	CU NIPDAU	Level-1-260C-UNLIM	-40 to 125	TL084Q	Samples
TL084QDR	ACTIVE	SOIC	D	14	2500	Green (RoHS & no Sb/Br)	CU NIPDAU	Level-1-260C-UNLIM	-40 to 125	TL084Q	Samples
TL084QDRG4	ACTIVE	SOIC	D	14	2500	Green (RoHS & no Sb/Br)	CU NIPDAU	Level-1-260C-UNLIM	-40 to 125	TL084Q	Samples

(1) The marketing status values are defined as follows:
ACTIVE: Product device recommended for new designs.
LIFEBUY: TI has announced that the device will be discontinued, and a lifetime-buy period is in effect.
NRND: Not recommended for new designs. Device is in production to support existing customers, but TI does not recommend using this part in a new design.
PREVIEW: Device has been announced but is not in production. Samples may or may not be available.
OBSOLETE: TI has discontinued the production of the device.

(2) **RoHS:** TI defines "RoHS" to mean semiconductor products that are compliant with the current EU RoHS requirements for all 10 RoHS substances, including the requirement that RoHS substance do not exceed 0.1% by weight in homogeneous materials. Where designed to be soldered at high temperatures, "RoHS" products are suitable for use in specified lead-free processes. TI may reference these types of products as "Pb-Free".
RoHS Exempt: TI defines "RoHS Exempt" to mean products that contain lead but are compliant with EU RoHS pursuant to a specific EU RoHS exemption.
Green: TI defines "Green" to mean the content of Chlorine (Cl) and Bromine (Br) based flame retardants meet JS709B low halogen requirements of <=1000ppm threshold. Antimony trioxide based flame retardants must also meet the <=1000ppm threshold requirement.

(3) MSL, Peak Temp. - The Moisture Sensitivity Level rating according to the JEDEC industry standard classifications, and peak solder temperature.

(4) There may be additional marking, which relates to the logo, the lot trace code information, or the environmental category on the device.

(5) Multiple Device Markings will be inside parentheses. Only one Device Marking contained in parentheses and separated by a "~" will appear on a device. If a line is indented then it is a continuation of the previous line and the two combined represent the entire Device Marking for that device.

(6) Lead/Ball Finish - Orderable Devices may have multiple material finish options. Finish options are separated by a vertical ruled line. Lead/Ball Finish values may wrap to two lines if the finish value exceeds the maximum column width.

Important Information and Disclaimer: The information provided on this page represents TI's knowledge and belief as of the date that it is provided. TI bases its knowledge and belief on information provided by third parties, and makes no representation or warranty as to the accuracy of such information. Efforts are underway to better integrate information from third parties. TI has taken and continues to take reasonable steps to provide representative and accurate information but may not have conducted destructive testing or chemical analysis on incoming materials and chemicals. TI and TI suppliers consider certain information to be proprietary, and thus CAS numbers and other limited information may not be available for release.

In no event shall TI's liability arising out of such information exceed the total purchase price of the TI part(s) at issue in this document sold by TI to Customer on an annual basis.

OTHER QUALIFIED VERSIONS OF TL082, TL082M, TL084, TL084M :

- Catalog: TL082, TL084
- Automotive: TL082-Q1, TL082-Q1
- Military: TL082M, TL084M

NOTE: Qualified Version Definitions:

- Catalog - TI's standard catalog product
- Automotive - Q100 devices qualified for high-reliability automotive applications targeting zero defects
- Military - QML certified for Military and Defense Applications

TAPE AND REEL INFORMATION

REEL DIMENSIONS

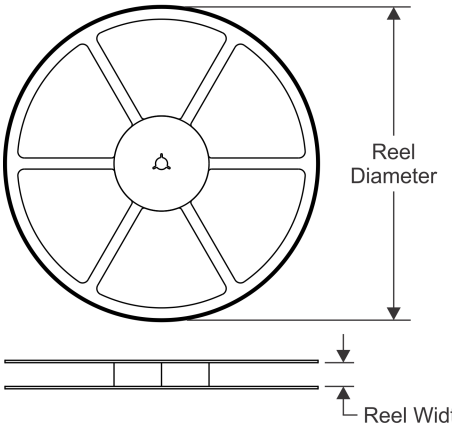

TAPE DIMENSIONS

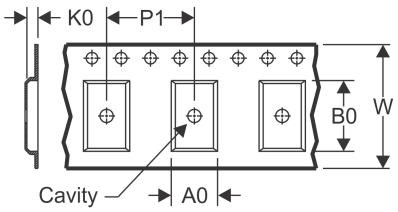

A0	Dimension designed to accommodate the component width
B0	Dimension designed to accommodate the component length
K0	Dimension designed to accommodate the component thickness
W	Overall width of the carrier tape
P1	Pitch between successive cavity centers

QUADRANT ASSIGNMENTS FOR PIN 1 ORIENTATION IN TAPE

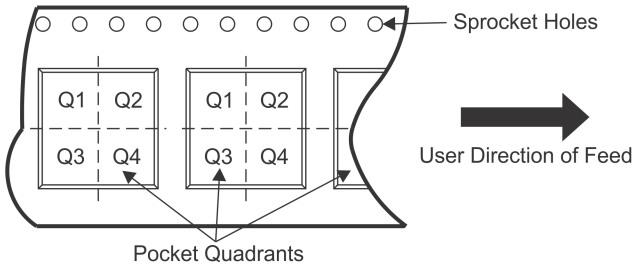

*All dimensions are nominal

Device	Package Type	Package Drawing	Pins	SPQ	Reel Diameter (mm)	Reel Width W1 (mm)	A0 (mm)	B0 (mm)	K0 (mm)	P1 (mm)	W (mm)	Pin1 Quadrant
TL081ACDR	SOIC	D	8	2500	330.0	12.4	6.4	5.2	2.1	8.0	12.0	Q1
TL081BCDR	SOIC	D	8	2500	330.0	12.4	6.4	5.2	2.1	8.0	12.0	Q1
TL081CDR	SOIC	D	8	2500	330.0	12.4	6.4	5.2	2.1	8.0	12.0	Q1
TL081IDR	SOIC	D	8	2500	330.0	12.4	6.4	5.2	2.1	8.0	12.0	Q1
TL082ACDR	SOIC	D	8	2500	330.0	12.4	6.4	5.2	2.1	8.0	12.0	Q1
TL082ACDR	SOIC	D	8	2500	330.0	12.4	6.4	5.2	2.1	8.0	12.0	Q1
TL082BCDR	SOIC	D	8	2500	330.0	12.4	6.4	5.2	2.1	8.0	12.0	Q1
TL082CDR	SOIC	D	8	2500	330.0	12.4	6.4	5.2	2.1	8.0	12.0	Q1
TL082CDR	SOIC	D	8	2500	330.0	12.4	6.4	5.2	2.1	8.0	12.0	Q1
TL082CPWR	TSSOP	PW	8	2000	330.0	12.4	7.0	3.6	1.6	8.0	12.0	Q1
TL082IDR	SOIC	D	8	2500	330.0	12.4	6.4	5.2	2.1	8.0	12.0	Q1
TL082IDR	SOIC	D	8	2500	330.0	12.4	6.4	5.2	2.1	8.0	12.0	Q1
TL082IPWR	TSSOP	PW	8	2000	330.0	12.4	7.0	3.6	1.6	8.0	12.0	Q1
TL084ACDR	SOIC	D	14	2500	330.0	16.4	6.5	9.0	2.1	8.0	16.0	Q1
TL084ACDR	SOIC	D	14	2500	330.0	16.4	6.5	9.0	2.1	8.0	16.0	Q1
TL084ACNSR	SO	NS	14	2000	330.0	16.4	8.2	10.5	2.5	12.0	16.0	Q1
TL084BCDR	SOIC	D	14	2500	330.0	16.4	6.5	9.0	2.1	8.0	16.0	Q1
TL084CDR	SOIC	D	14	2500	330.0	16.4	6.5	9.0	2.1	8.0	16.0	Q1

Device	Package Type	Package Drawing	Pins	SPQ	Reel Diameter (mm)	Reel Width W1 (mm)	A0 (mm)	B0 (mm)	K0 (mm)	P1 (mm)	W (mm)	Pin1 Quadrant
TL084CDR	SOIC	D	14	2500	330.0	16.4	6.5	9.0	2.1	8.0	16.0	Q1
TL084CDRG4	SOIC	D	14	2500	330.0	16.4	6.5	9.0	2.1	8.0	16.0	Q1
TL084CPWR	TSSOP	PW	14	2000	330.0	12.4	6.9	5.6	1.6	8.0	12.0	Q1
TL084IDR	SOIC	D	14	2500	330.0	16.4	6.5	9.0	2.1	8.0	16.0	Q1
TL084QDR	SOIC	D	14	2500	330.0	16.4	6.5	9.0	2.1	8.0	16.0	Q1
TL084QDRG4	SOIC	D	14	2500	330.0	16.4	6.5	9.0	2.1	8.0	16.0	Q1

TAPE AND REEL BOX DIMENSIONS

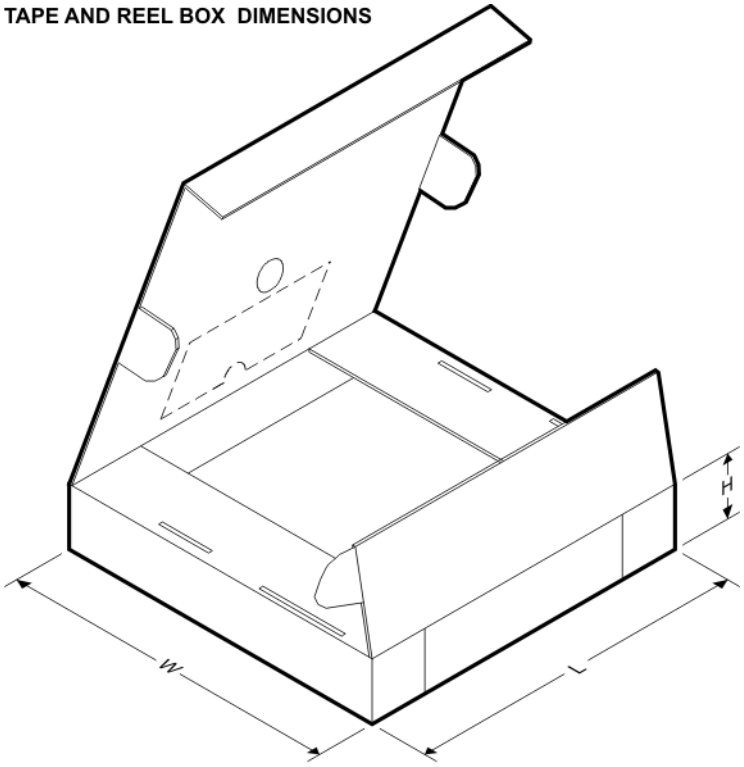

*All dimensions are nominal

Device	Package Type	Package Drawing	Pins	SPQ	Length (mm)	Width (mm)	Height (mm)
TL081ACDR	SOIC	D	8	2500	340.5	338.1	20.6
TL081BCDR	SOIC	D	8	2500	340.5	338.1	20.6
TL081CDR	SOIC	D	8	2500	340.5	338.1	20.6
TL081IDR	SOIC	D	8	2500	340.5	338.1	20.6
TL082ACDR	SOIC	D	8	2500	340.5	338.1	20.6
TL082ACDR	SOIC	D	8	2500	367.0	367.0	35.0
TL082BCDR	SOIC	D	8	2500	340.5	338.1	20.6
TL082CDR	SOIC	D	8	2500	367.0	367.0	35.0
TL082CDR	SOIC	D	8	2500	340.5	338.1	20.6
TL082CPWR	TSSOP	PW	8	2000	367.0	367.0	35.0
TL082IDR	SOIC	D	8	2500	367.0	367.0	35.0

Device	Package Type	Package Drawing	Pins	SPQ	Length (mm)	Width (mm)	Height (mm)
TL082IDR	SOIC	D	8	2500	340.5	338.1	20.6
TL082IPWR	TSSOP	PW	8	2000	367.0	367.0	35.0
TL084ACDR	SOIC	D	14	2500	333.2	345.9	28.6
TL084ACDR	SOIC	D	14	2500	367.0	367.0	38.0
TL084ACNSR	SO	NS	14	2000	367.0	367.0	38.0
TL084BCDR	SOIC	D	14	2500	333.2	345.9	28.6
TL084CDR	SOIC	D	14	2500	367.0	367.0	38.0
TL084CDR	SOIC	D	14	2500	333.2	345.9	28.6
TL084CDRG4	SOIC	D	14	2500	333.2	345.9	28.6
TL084CPWR	TSSOP	PW	14	2000	367.0	367.0	35.0
TL084IDR	SOIC	D	14	2500	333.2	345.9	28.6
TL084QDR	SOIC	D	14	2500	350.0	350.0	43.0
TL084QDRG4	SOIC	D	14	2500	350.0	350.0	43.0

FK (S–CQCC–N**) LEADLESS CERAMIC CHIP CARRIER

28 TERMINAL SHOWN

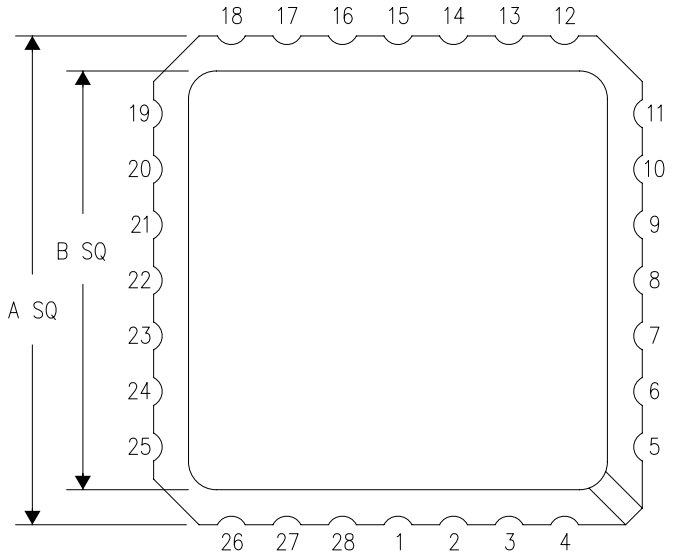

NO. OF TERMINALS **	A		B	
	MIN	MAX	MIN	MAX
20	0.342 (8,69)	0.358 (9,09)	0.307 (7,80)	0.358 (9,09)
28	0.442 (11,23)	0.458 (11,63)	0.406 (10,31)	0.458 (11,63)
44	0.640 (16,26)	0.660 (16,76)	0.495 (12,58)	0.560 (14,22)
52	0.740 (18,78)	0.761 (19,32)	0.495 (12,58)	0.560 (14,22)
68	0.938 (23,83)	0.962 (24,43)	0.850 (21,6)	0.858 (21,8)
84	1.141 (28,99)	1.165 (29,59)	1.047 (26,6)	1.063 (27,0)

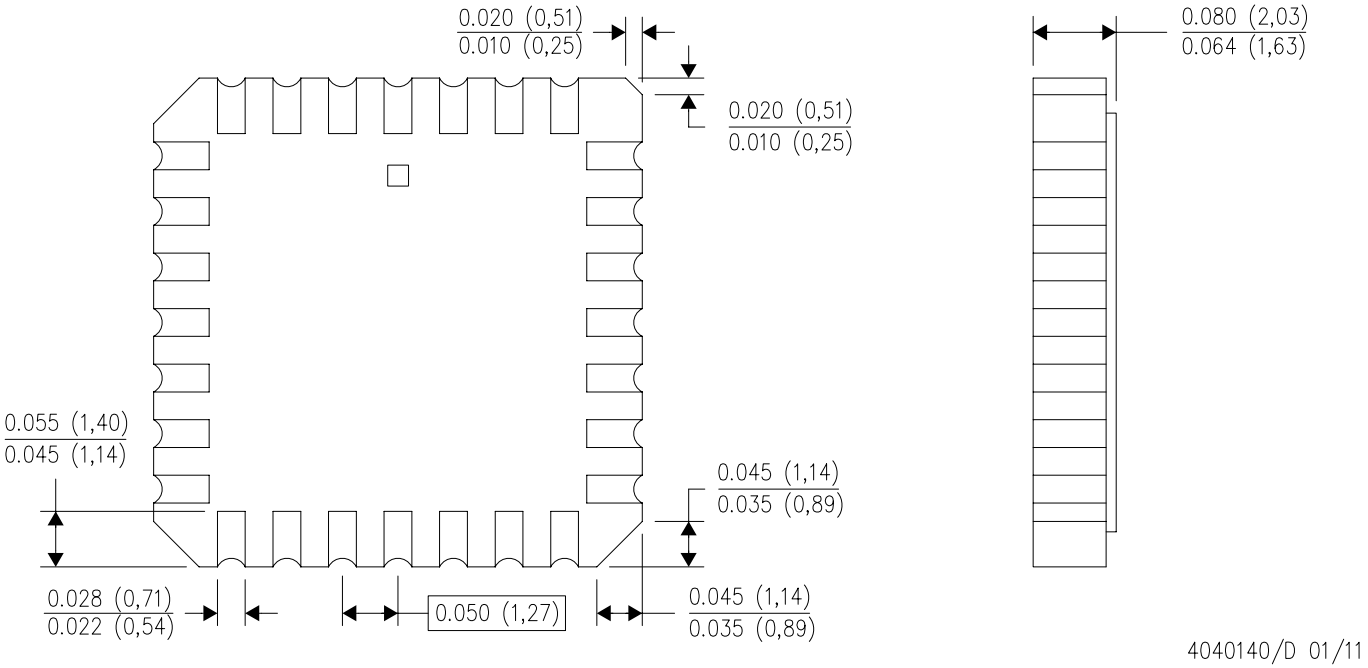

4040140/D 01/11

NOTES:
A. All linear dimensions are in inches (millimeters).
B. This drawing is subject to change without notice.
C. This package can be hermetically sealed with a metal lid.
D. Falls within JEDEC MS–004

MECHANICAL DATA

NS (R-PDSO-G)** **PLASTIC SMALL-OUTLINE PACKAGE**

14-PINS SHOWN

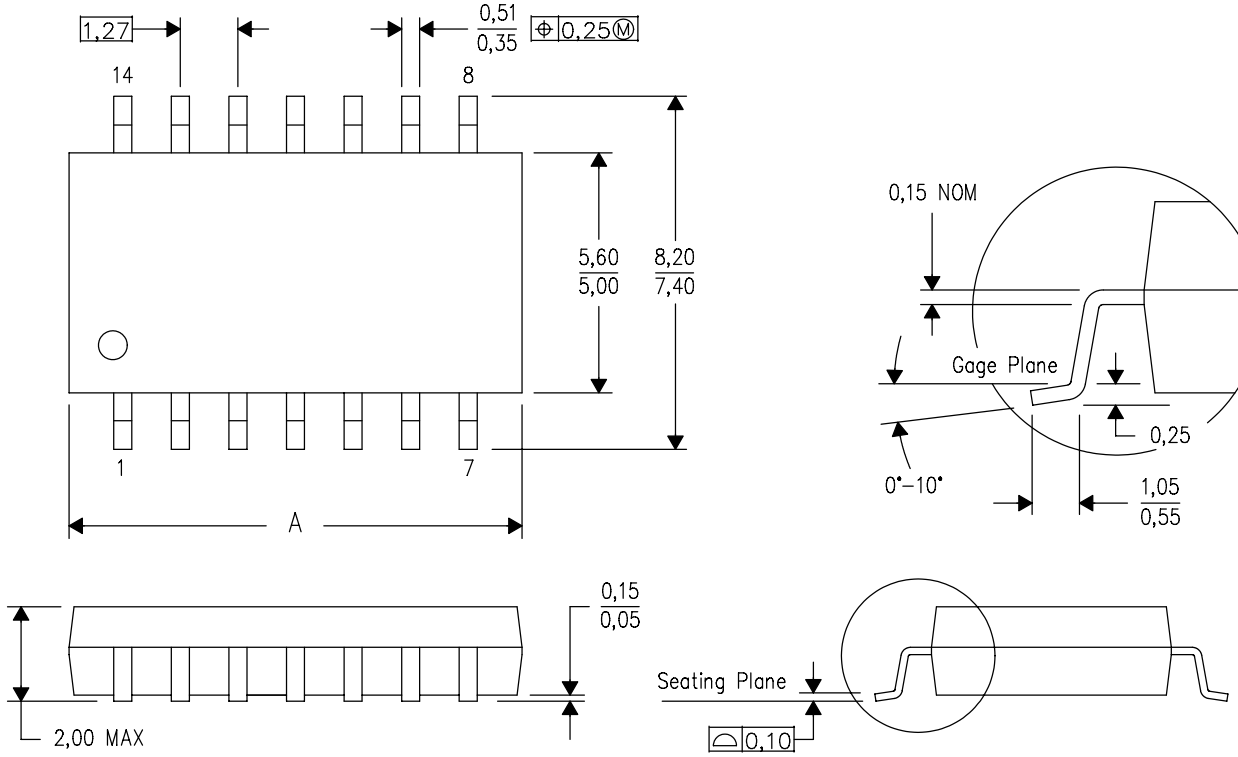

DIM \ PINS **	14	16	20	24
A MAX	10,50	10,50	12,90	15,30
A MIN	9,90	9,90	12,30	14,70

4040062/C 03/03

NOTES:
A. All linear dimensions are in millimeters.
B. This drawing is subject to change without notice.
C. Body dimensions do not include mold flash or protrusion, not to exceed 0,15.

GENERIC PACKAGE VIEW

J 14 CDIP - 5.08 mm max height

CERAMIC DUAL IN LINE PACKAGE

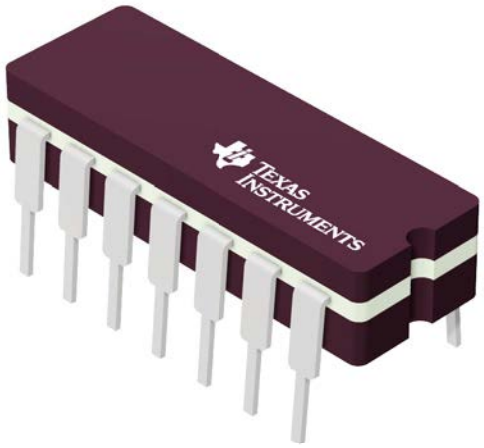

Images above are just a representation of the package family, actual package may vary.
Refer to the product data sheet for package details.

4040083-5/G



PACKAGE OUTLINE

J0014A

CDIP - 5.08 mm max height

CERAMIC DUAL IN LINE PACKAGE

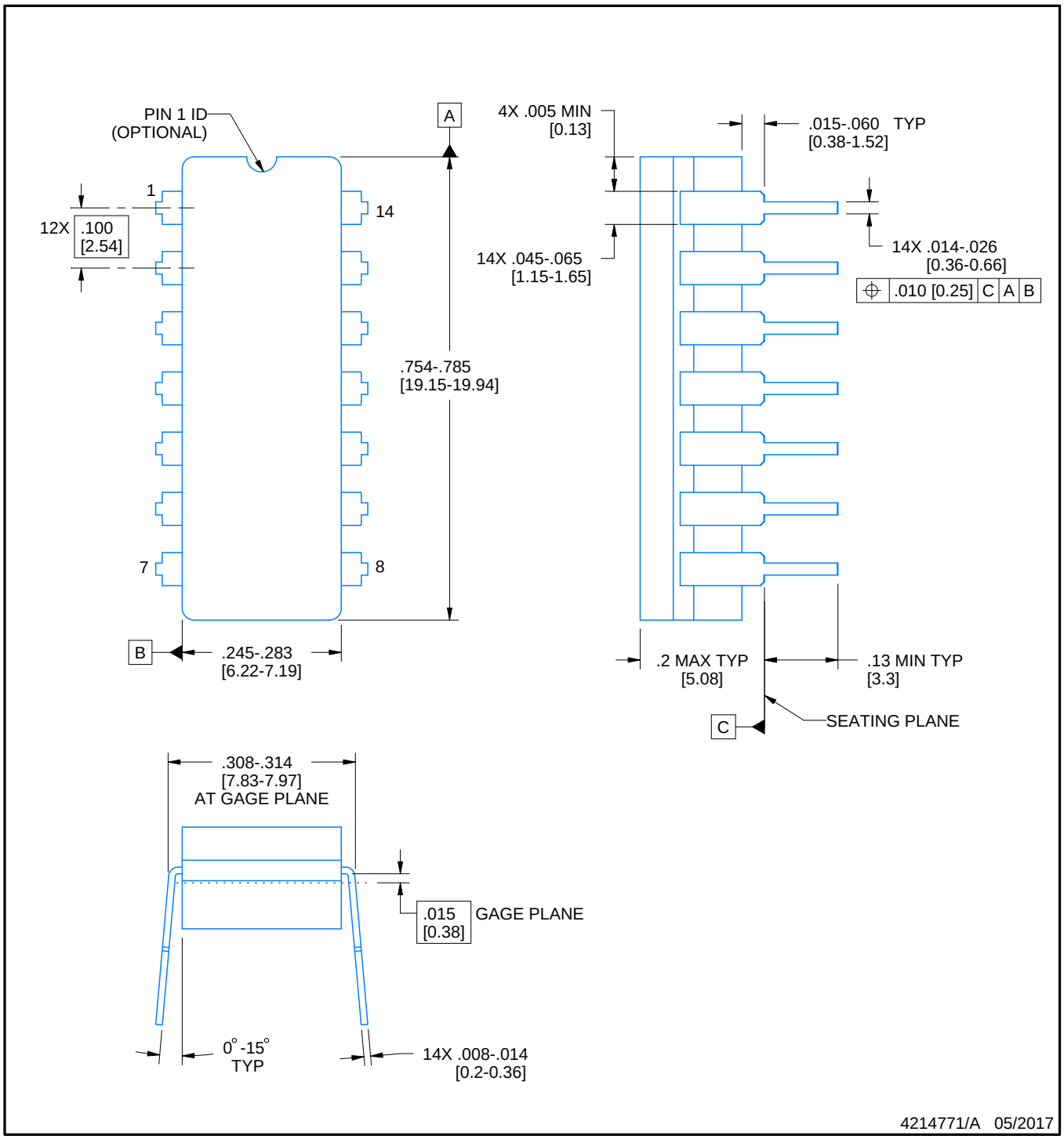

NOTES:

1. All controlling linear dimensions are in inches. Dimensions in brackets are in millimeters. Any dimension in brackets or parenthesis are for reference only. Dimensioning and tolerancing per ASME Y14.5M.
2. This drawing is subject to change without notice.
3. This package is hermitically sealed with a ceramic lid using glass frit.
4. Index point is provided on cap for terminal identification only and on press ceramic glass frit seal only.
5. Falls within MIL-STD-1835 and GDIP1-T14.

EXAMPLE BOARD LAYOUT

J0014A

CDIP - 5.08 mm max height

CERAMIC DUAL IN LINE PACKAGE

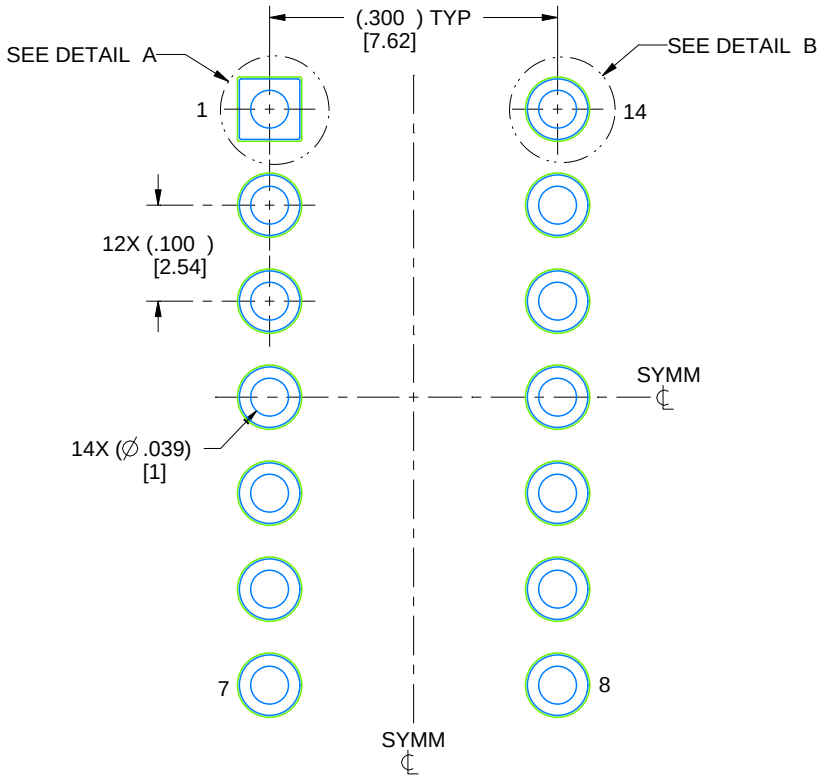

LAND PATTERN EXAMPLE
NON-SOLDER MASK DEFINED
SCALE: 5X

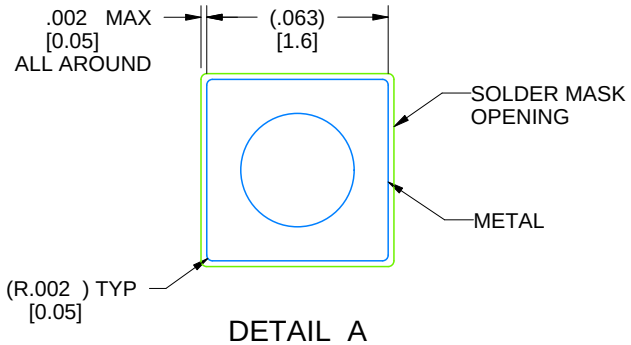

DETAIL A
SCALE: 15X

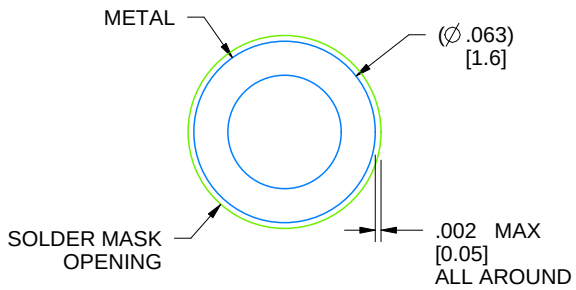

DETAIL B
13X, SCALE: 15X

4214771/A 05/2017

D (R–PDSO–G14) PLASTIC SMALL OUTLINE

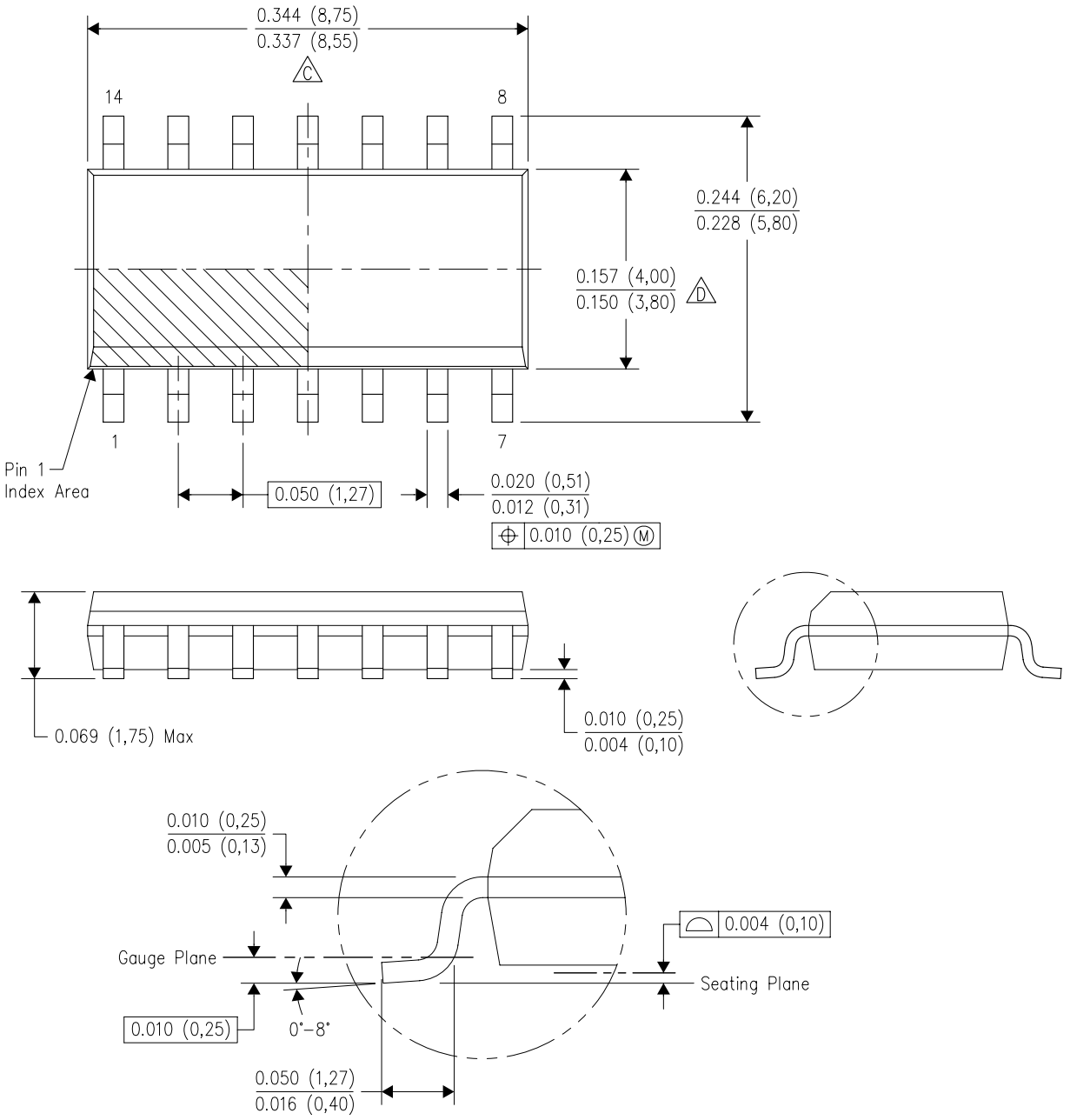

4040047–5/M 06/11

NOTES:
A. All linear dimensions are in inches (millimeters).
B. This drawing is subject to change without notice.
C. Body length does not include mold flash, protrusions, or gate burrs. Mold flash, protrusions, or gate burrs shall not exceed 0.006 (0,15) each side.
D. Body width does not include interlead flash. Interlead flash shall not exceed 0.017 (0,43) each side.
E. Reference JEDEC MS–012 variation AB.

D (R–PDSO–G14) PLASTIC SMALL OUTLINE

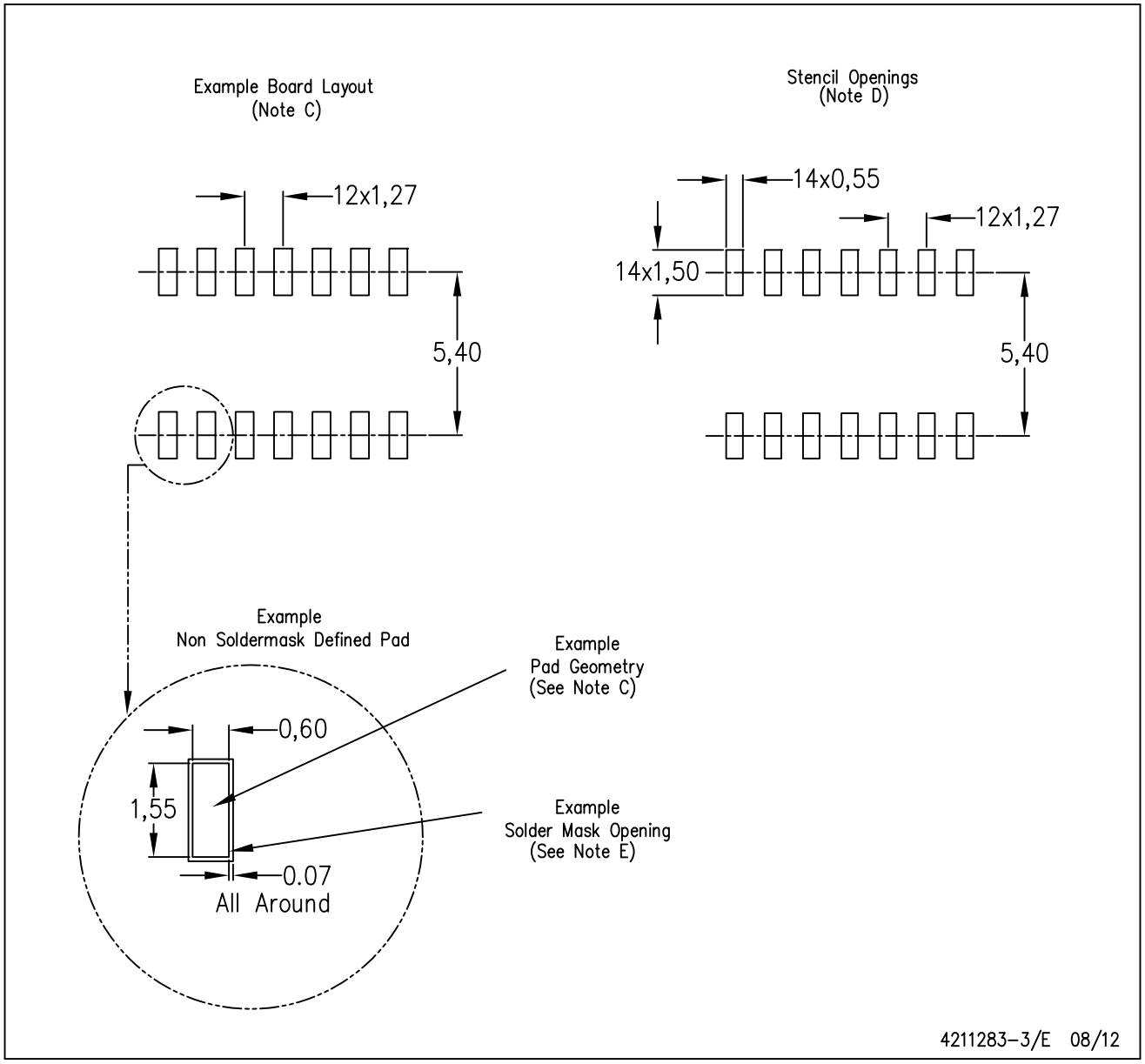

NOTES:
A. All linear dimensions are in millimeters.
B. This drawing is subject to change without notice.
C. Publication IPC–7351 is recommended for alternate designs.
D. Laser cutting apertures with trapezoidal walls and also rounding corners will offer better paste release. Customers should contact their board assembly site for stencil design recommendations. Refer to IPC–7525 for other stencil recommendations.
E. Customers should contact their board fabrication site for solder mask tolerances between and around signal pads.

PW (R–PDSO–G14) PLASTIC SMALL OUTLINE

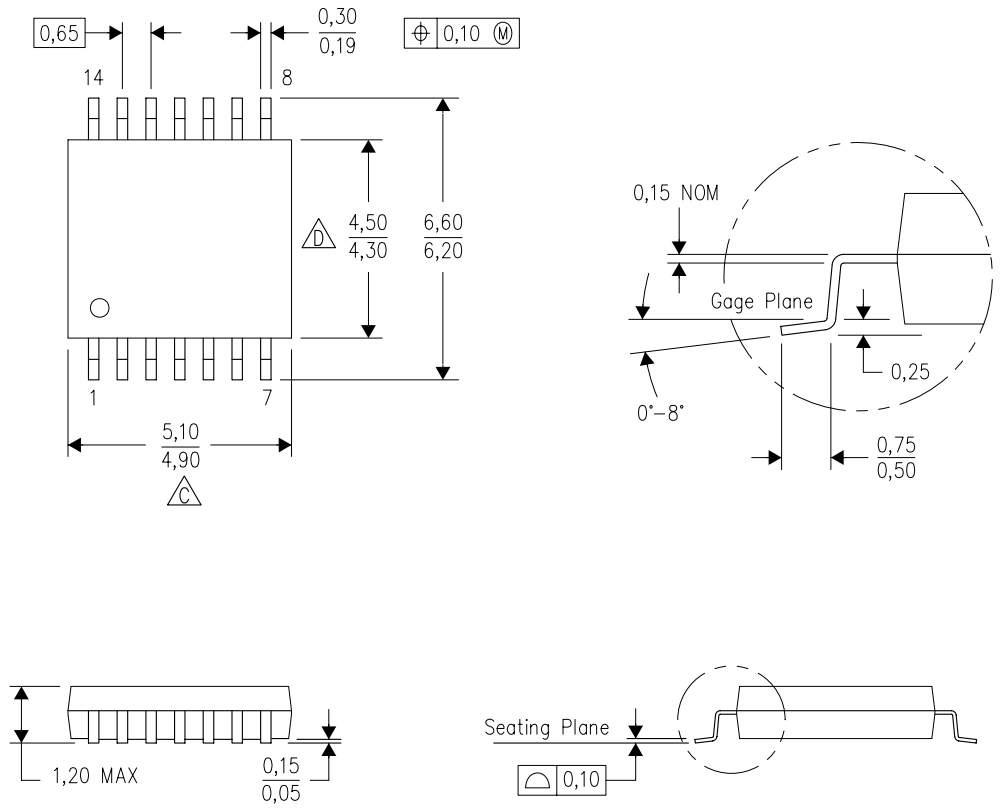

4040064–3/G 02/11

NOTES:
A. All linear dimensions are in millimeters. Dimensioning and tolerancing per ASME Y14.5M–1994.
B. This drawing is subject to change without notice.
C. Body length does not include mold flash, protrusions, or gate burrs. Mold flash, protrusions, or gate burrs shall not exceed 0,15 each side.
D. Body width does not include interlead flash. Interlead flash shall not exceed 0,25 each side.
E. Falls within JEDEC MO–153

PW (R–PDSO–G14) PLASTIC SMALL OUTLINE

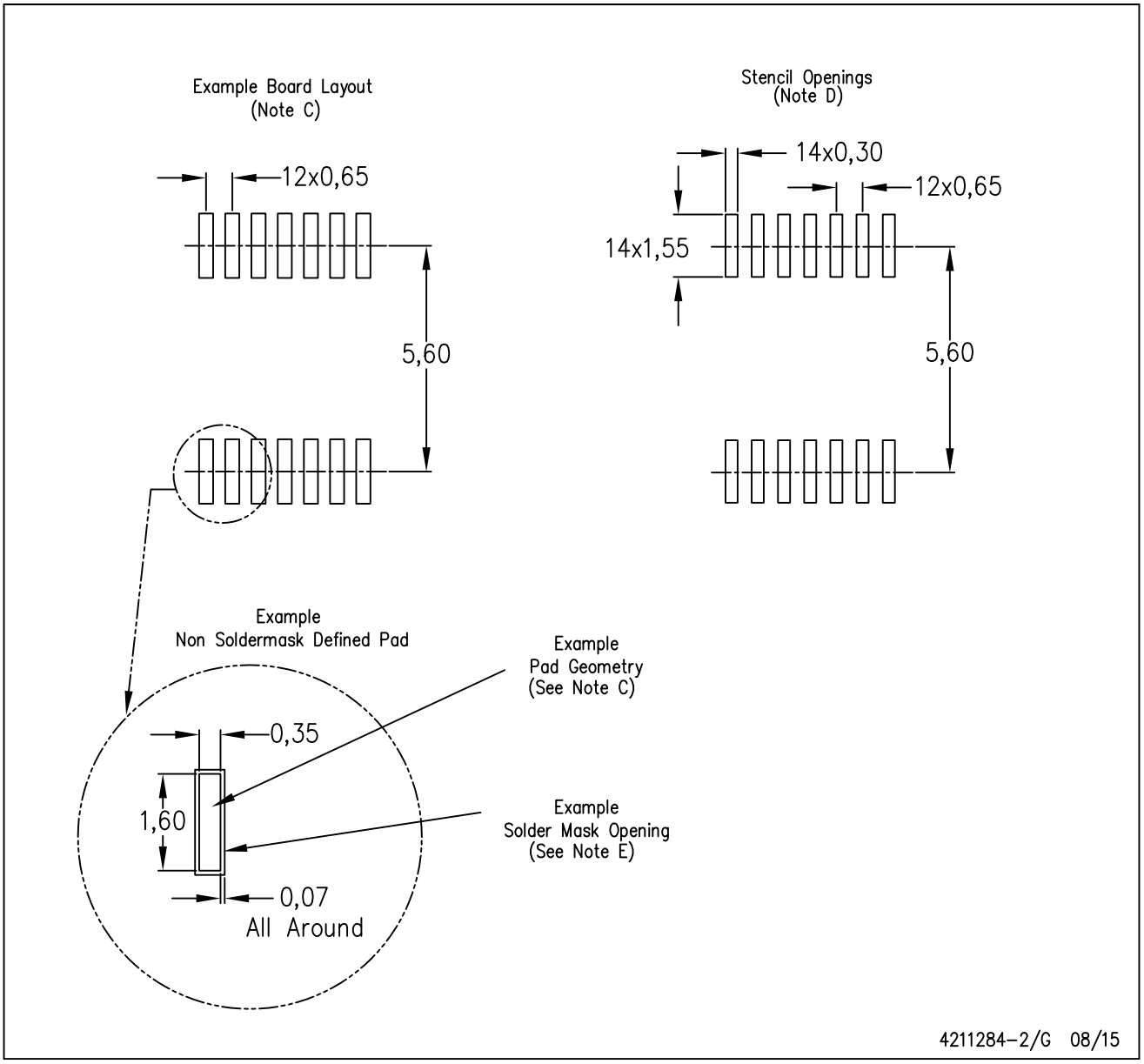

NOTES:
A. All linear dimensions are in millimeters.
B. This drawing is subject to change without notice.
C. Publication IPC–7351 is recommended for alternate designs.
D. Laser cutting apertures with trapezoidal walls and also rounding corners will offer better paste release. Customers should contact their board assembly site for stencil design recommendations. Refer to IPC–7525 for other stencil recommendations.
E. Customers should contact their board fabrication site for solder mask tolerances between and around signal pads.

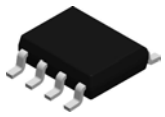

PACKAGE OUTLINE

D0008A

SOIC - 1.75 mm max height

SMALL OUTLINE INTEGRATED CIRCUIT

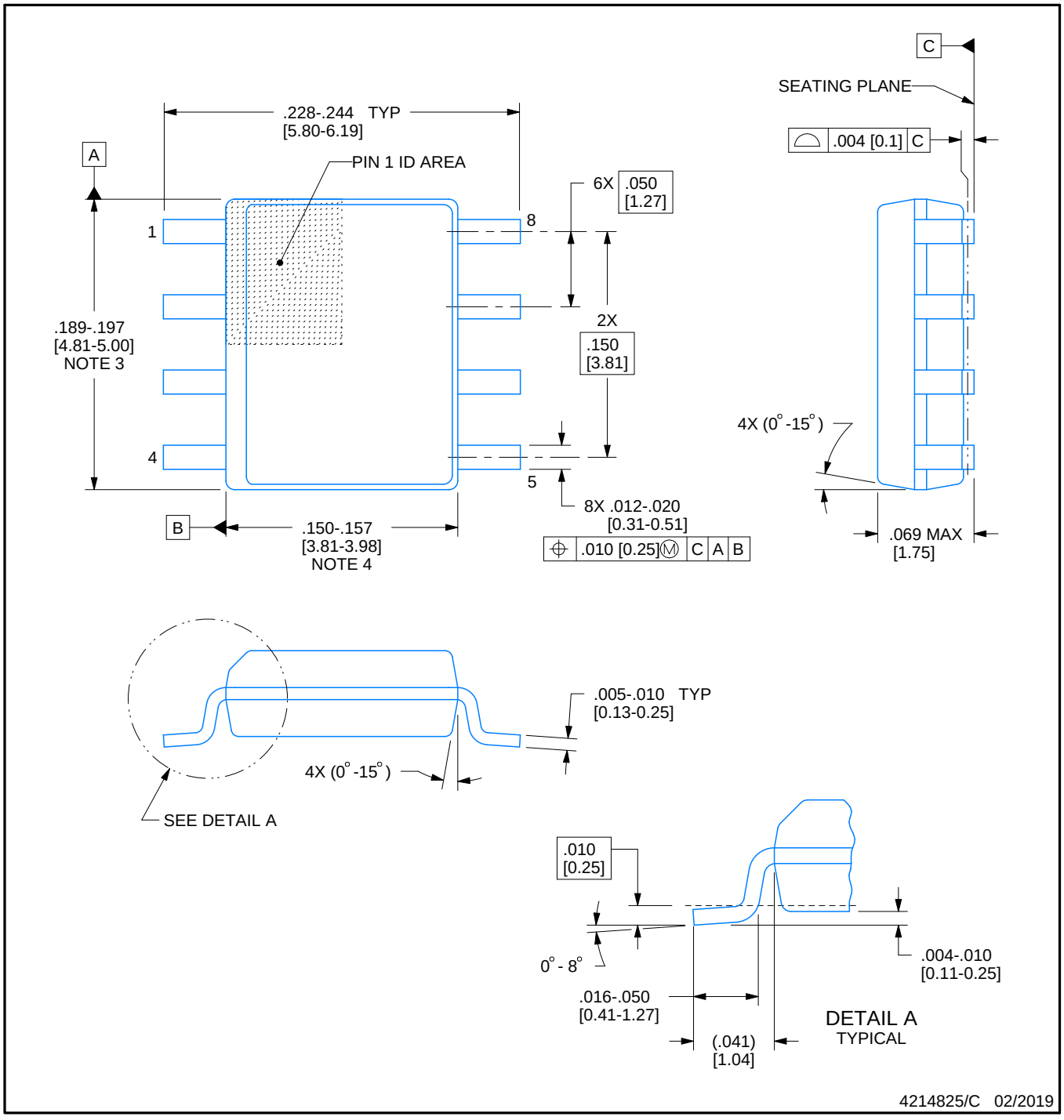

NOTES:

1. Linear dimensions are in inches [millimeters]. Dimensions in parenthesis are for reference only. Controlling dimensions are in inches. Dimensioning and tolerancing per ASME Y14.5M.
2. This drawing is subject to change without notice.
3. This dimension does not include mold flash, protrusions, or gate burrs. Mold flash, protrusions, or gate burrs shall not exceed .006 [0.15] per side.
4. This dimension does not include interlead flash.
5. Reference JEDEC registration MS-012, variation AA.

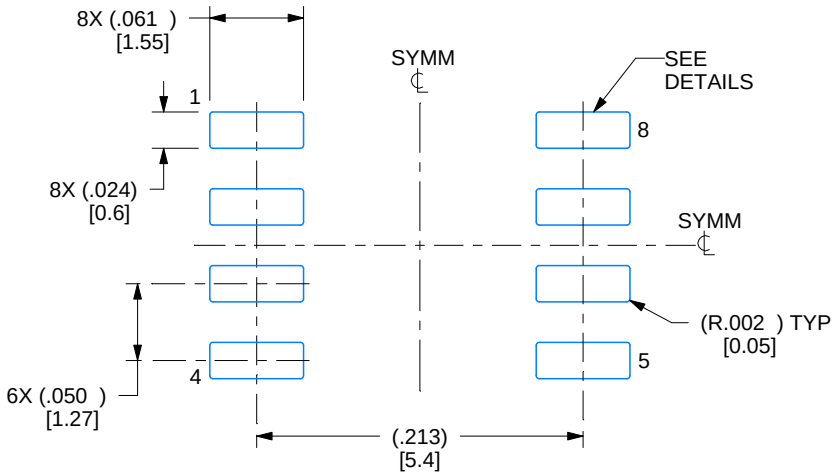

LAND PATTERN EXAMPLE
EXPOSED METAL SHOWN
SCALE:8X

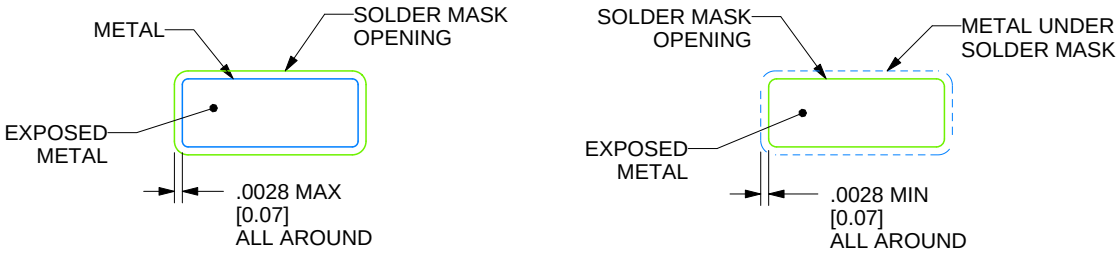

SOLDER MASK DETAILS

4214825/C 02/2019

NOTES: (continued)

6. Publication IPC-7351 may have alternate designs.
7. Solder mask tolerances between and around signal pads can vary based on board fabrication site.

EXAMPLE STENCIL DESIGN

D0008A

SOIC - 1.75 mm max height

SMALL OUTLINE INTEGRATED CIRCUIT

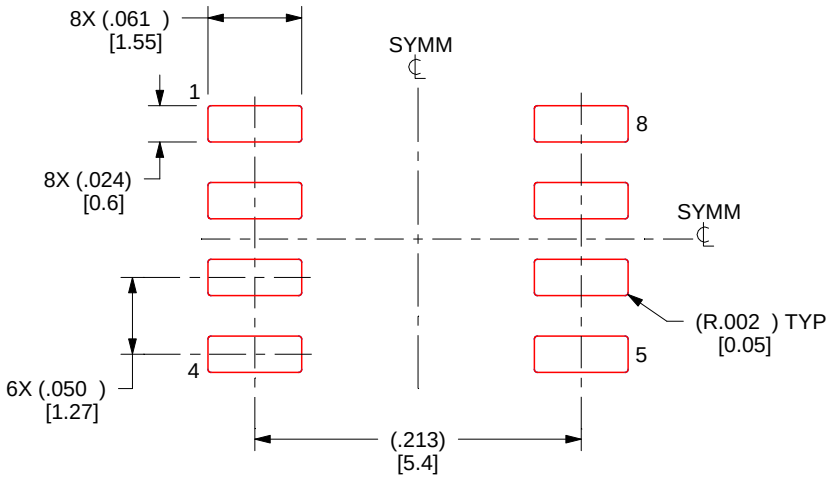

SOLDER PASTE EXAMPLE
BASED ON .005 INCH [0.125 MM] THICK STENCIL
SCALE:8X

4214825/C 02/2019

NOTES: (continued)

8. Laser cutting apertures with trapezoidal walls and rounded corners may offer better paste release. IPC-7525 may have alternate design recommendations.
9. Board assembly site may have different recommendations for stencil design.

MECHANICAL DATA

PS (R-PDSO-G8) **PLASTIC SMALL-OUTLINE PACKAGE**

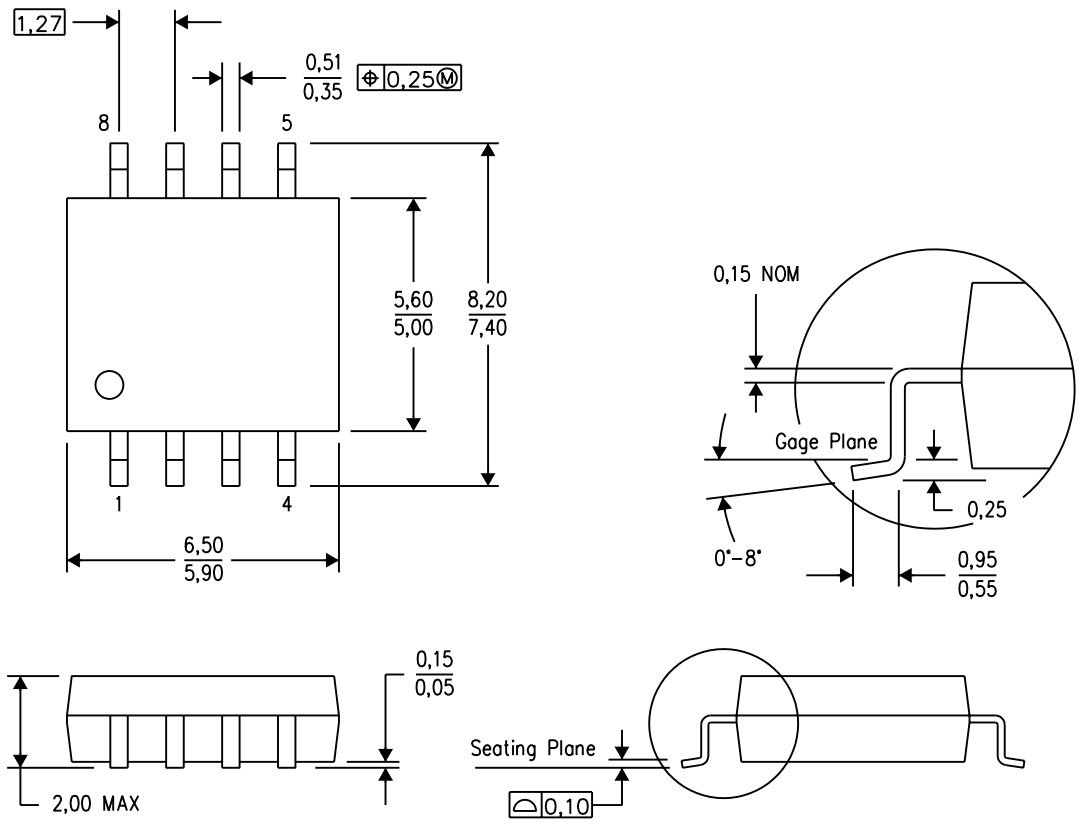

4040063/C 03/03

NOTES:
A. All linear dimensions are in millimeters.
B. This drawing is subject to change without notice.
C. Body dimensions do not include mold flash or protrusion, not to exceed 0,15.

PS (R–PDSO–G8) PLASTIC SMALL OUTLINE

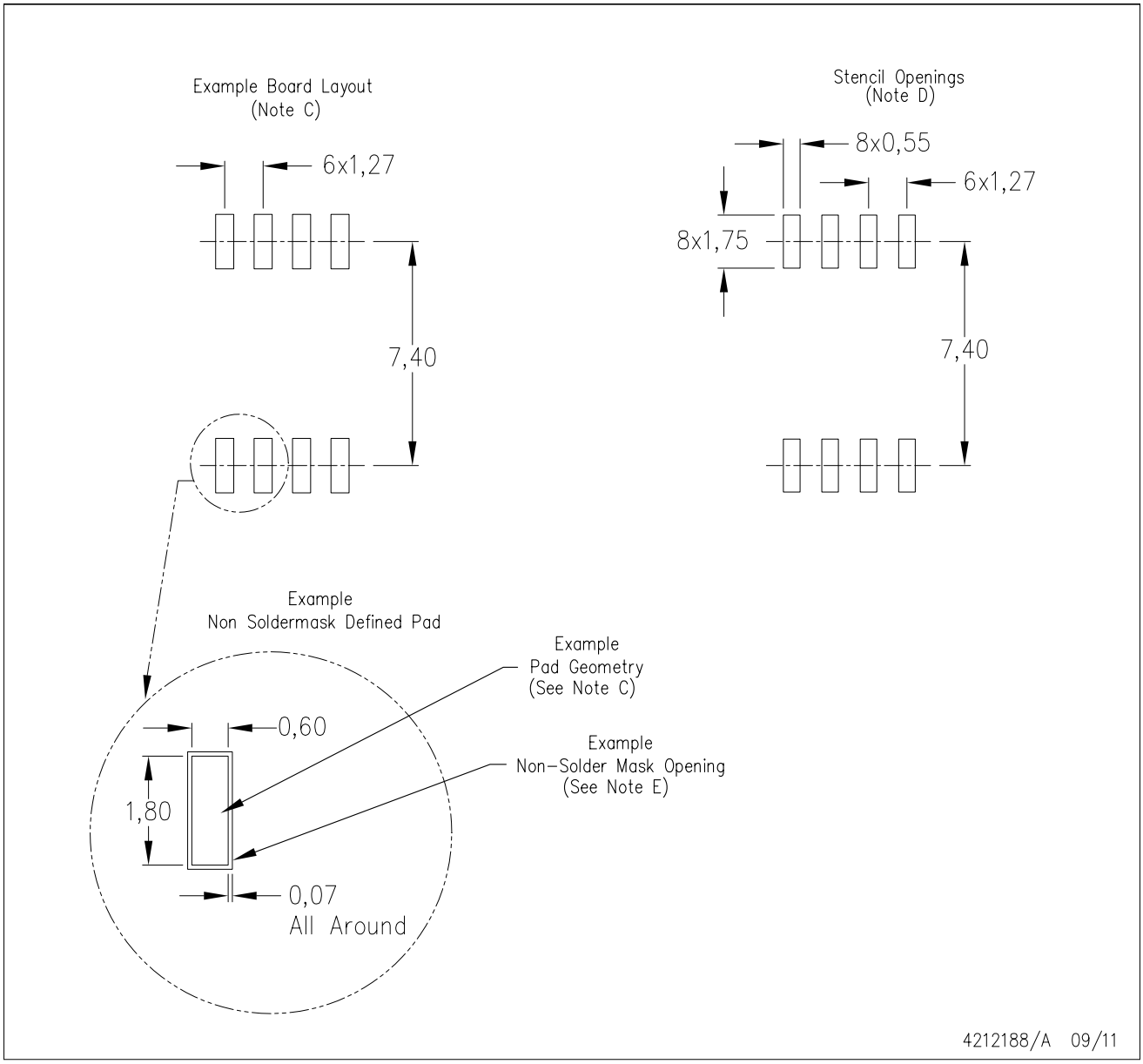

NOTES:
A. All linear dimensions are in millimeters.
B. This drawing is subject to change without notice.
C. Publication IPC–7351 is recommended for alternate designs.
D. Laser cutting apertures with trapezoidal walls and also rounding corners will offer better paste release. Customers should contact their board assembly site for stencil design recommendations. Refer to IPC–7525 for other stencil recommendations.
E. Customers should contact their board fabrication site for solder mask tolerances between and around signal pads.

MCER001A – JANUARY 1995 – REVISED JANUARY 1997

JG (R-GDIP-T8) **CERAMIC DUAL-IN-LINE**

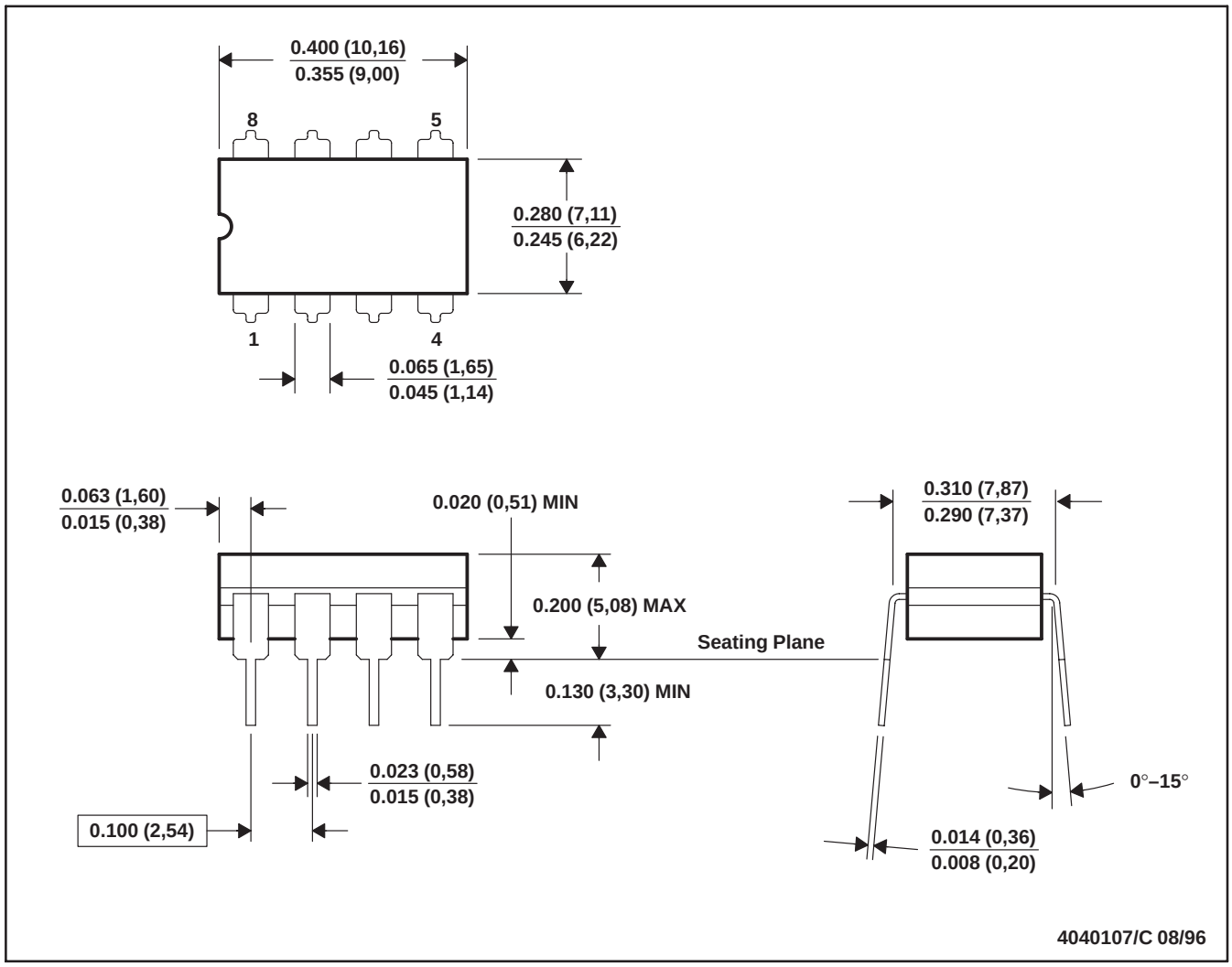

NOTES: A. All linear dimensions are in inches (millimeters).
B. This drawing is subject to change without notice.
C. This package can be hermetically sealed with a ceramic lid using glass frit.
D. Index point is provided on cap for terminal identification.
E. Falls within MIL STD 1835 GDIP1-T8

P (R–PDIP–T8) PLASTIC DUAL–IN–LINE PACKAGE

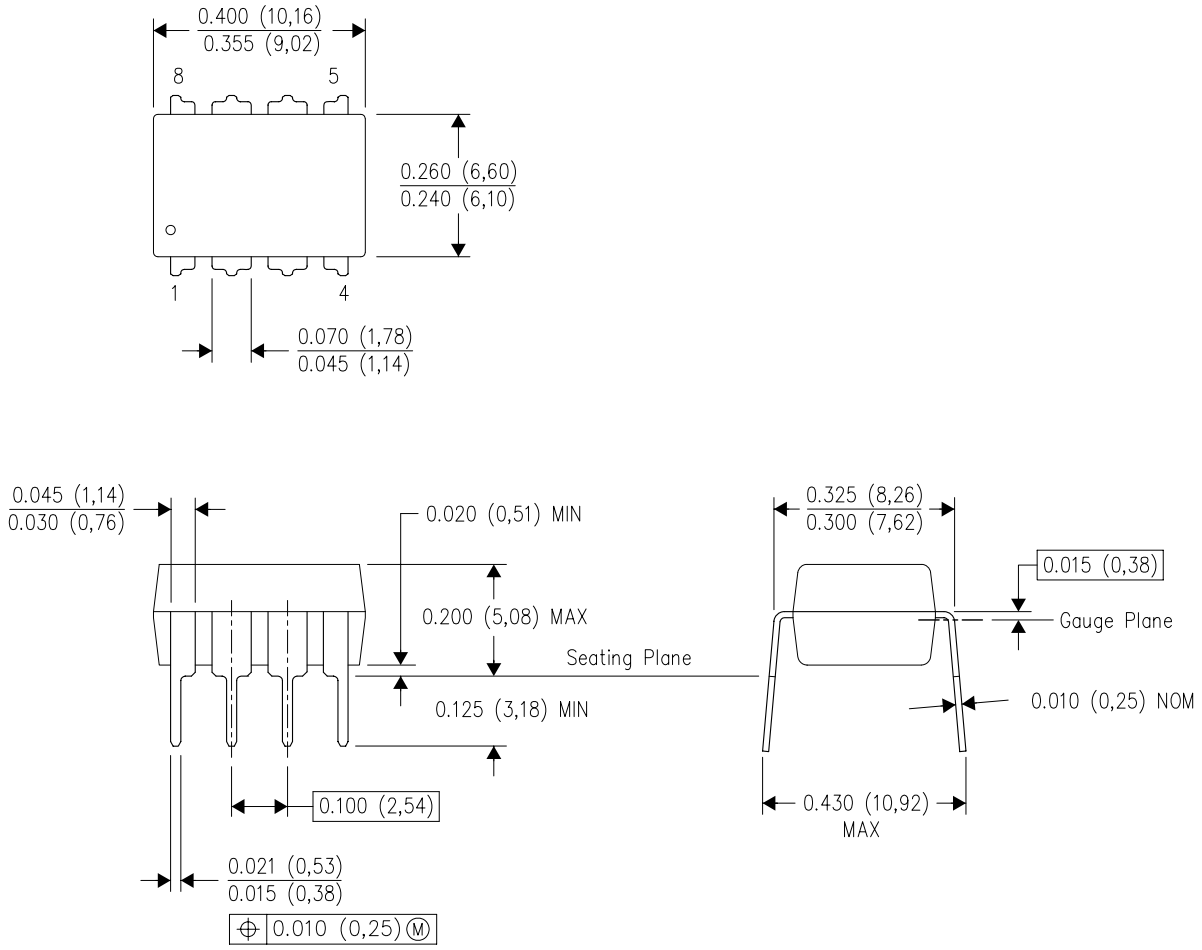

NOTES:
A. All linear dimensions are in inches (millimeters).
B. This drawing is subject to change without notice.
C. Falls within JEDEC MS–001 variation BA.

N (R–PDIP–T**)

PLASTIC DUAL–IN–LINE PACKAGE

16 PINS SHOWN

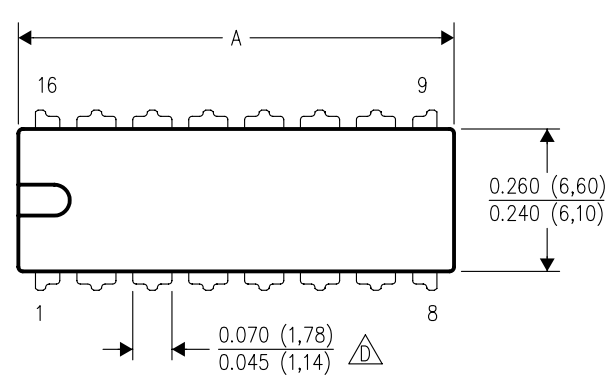

DIM \ PINS **	14	16	18	20
A MAX	0.775 (19,69)	0.775 (19,69)	0.920 (23,37)	1.060 (26,92)
A MIN	0.745 (18,92)	0.745 (18,92)	0.850 (21,59)	0.940 (23,88)
MS–001 VARIATION (C)	AA	BB	AC	AD

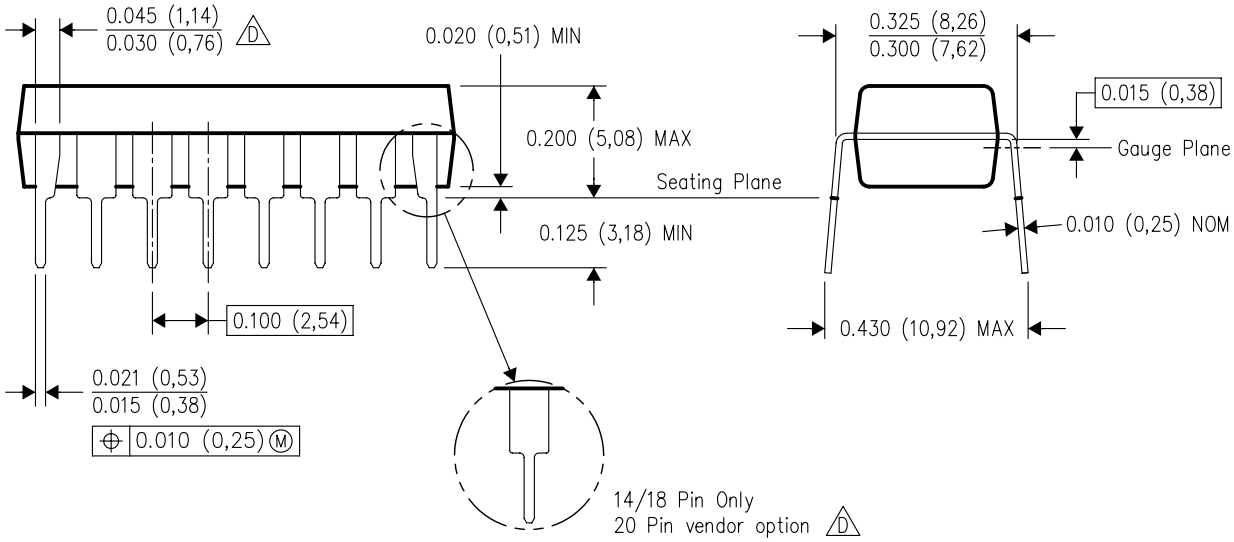

4040049/E 12/2002

NOTES:
A. All linear dimensions are in inches (millimeters).
B. This drawing is subject to change without notice.
C. Falls within JEDEC MS–001, except 18 and 20 pin minimum body length (Dim A).
D. The 20 pin end lead shoulder width is a vendor option, either half or full width.

PACKAGE OUTLINE

PW0008A

TSSOP - 1.2 mm max height

SMALL OUTLINE PACKAGE

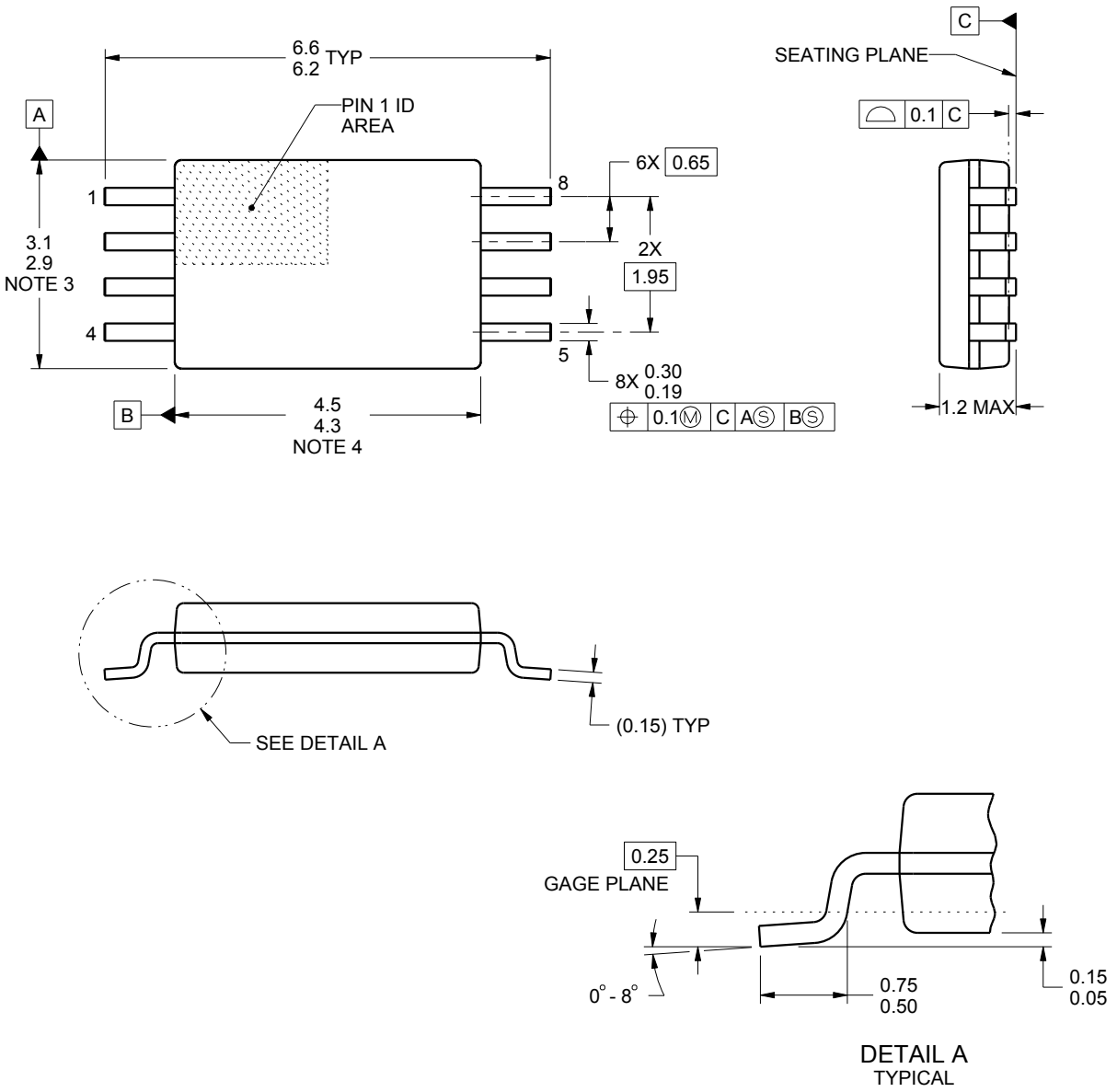

NOTES:

1. All linear dimensions are in millimeters. Any dimensions in parenthesis are for reference only. Dimensioning and tolerancing per ASME Y14.5M.
2. This drawing is subject to change without notice.
3. This dimension does not include mold flash, protrusions, or gate burrs. Mold flash, protrusions, or gate burrs shall not exceed 0.15 mm per side.
4. This dimension does not include interlead flash. Interlead flash shall not exceed 0.25 mm per side.
5. Reference JEDEC registration MO-153, variation AA.

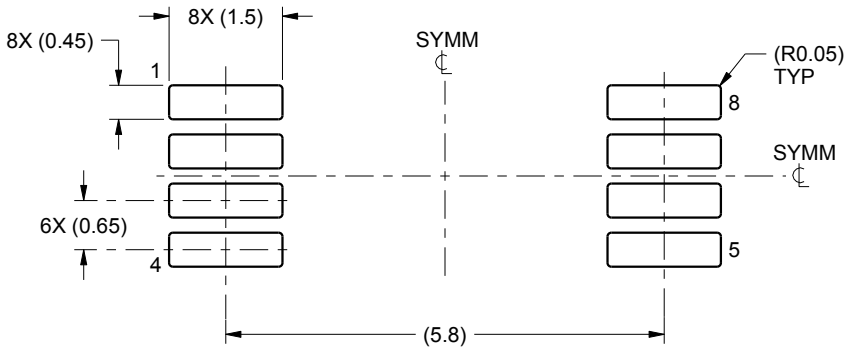

LAND PATTERN EXAMPLE
SCALE:10X

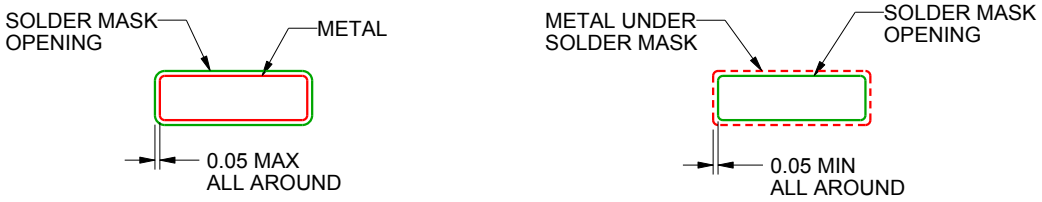

SOLDER MASK DETAILS
NOT TO SCALE

4221848/A 02/2015

NOTES: (continued)

6. Publication IPC-7351 may have alternate designs.
7. Solder mask tolerances between and around signal pads can vary based on board fabrication site.

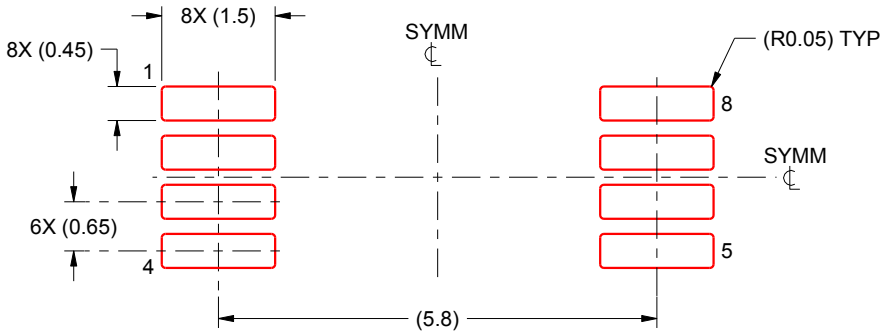

SOLDER PASTE EXAMPLE
BASED ON 0.125 mm THICK STENCIL
SCALE:10X

4221848/A 02/2015

NOTES: (continued)

8. Laser cutting apertures with trapezoidal walls and rounded corners may offer better paste release. IPC-7525 may have alternate design recommendations.
9. Board assembly site may have different recommendations for stencil design.

IMPORTANT NOTICE AND DISCLAIMER

TI PROVIDES TECHNICAL AND RELIABILITY DATA (INCLUDING DATASHEETS), DESIGN RESOURCES (INCLUDING REFERENCE DESIGNS), APPLICATION OR OTHER DESIGN ADVICE, WEB TOOLS, SAFETY INFORMATION, AND OTHER RESOURCES “AS IS” AND WITH ALL FAULTS, AND DISCLAIMS ALL WARRANTIES, EXPRESS AND IMPLIED, INCLUDING WITHOUT LIMITATION ANY IMPLIED WARRANTIES OF MERCHANTABILITY, FITNESS FOR A PARTICULAR PURPOSE OR NON-INFRINGEMENT OF THIRD PARTY INTELLECTUAL PROPERTY RIGHTS.

These resources are intended for skilled developers designing with TI products. You are solely responsible for (1) selecting the appropriate TI products for your application, (2) designing, validating and testing your application, and (3) ensuring your application meets applicable standards, and any other safety, security, or other requirements. These resources are subject to change without notice. TI grants you permission to use these resources only for development of an application that uses the TI products described in the resource. Other reproduction and display of these resources is prohibited. No license is granted to any other TI intellectual property right or to any third party intellectual property right. TI disclaims responsibility for, and you will fully indemnify TI and its representatives against, any claims, damages, costs, losses, and liabilities arising out of your use of these resources.

TI’s products are provided subject to TI’s Terms of Sale (www.ti.com/legal/termsofsale.html) or other applicable terms available either on ti.com or provided in conjunction with such TI products. TI’s provision of these resources does not expand or otherwise alter TI’s applicable warranties or warranty disclaimers for TI products.

Mailing Address: Texas Instruments, Post Office Box 655303, Dallas, Texas 75265
Copyright © 2019, Texas Instruments Incorporated

Looking for pricing, stock, or lifecycle information?

Click below to explore more details on WIN SOURCE:

- View TL084CD on WIN SOURCE
- Texas Instruments Information

Optimize Your Supply Chain with WIN SOURCE Solutions

- Global Sourcing Solution
- Obsolete Management
- Cost Control Management
- Shortage Management
- Alternative Solution
- Excess Inventory Management