THE DATASHEET OF

TPIC6C595DRG4

www.win-source.net 0086-755-83957316

TPIC6C595 Power Logic 8-Bit Shift Register

1 Features

- Low $r_{DS(on)}$, 7 Ω Typical
- Avalanche Energy, 30 mJ
- Eight Power DMOS Transistor Outputs of 100-mA Continuous Current
- 250-mA Current Limit Capability
- ESD Protection, 2500 V
- Output Clamp Voltage, 33 V
- Devices are Cascadable
- Low-Power Consumption

2 Applications

- Instrumentation Clusters
- Tell-Tale Lamps
- LED Illumination and Controls
- Automotive Relay or Solenoids
- Drivers

3 Description

The TPIC6C595 is a monolithic, medium-voltage, low-current power 8-bit shift register designed for use in systems that require relatively moderate load power such as LEDs. The device contains a built-in voltage clamp on the outputs for inductive transient protection. Power driver applications include relays, solenoids, and other low-current or medium-voltage loads.

This device contains an 8-bit serial-in, parallel-out shift register that feeds an 8-bit D-type storage register. Data transfers through both the shift and storage registers on the rising edge of the shift register clock (SRCK) and the register clock (RCK), respectively. The device transfers data out the serial output (SER OUT) port on the rising edge of SRCK. The storage register transfers data to the output buffer when shift register clear ($\overline{CLR}$) is high. When $\overline{CLR}$ is low, the input shift register is cleared. When output enable ($\overline{G}$) is held high, all data in the output buffers is held low and all drain outputs are off. When $\overline{G}$ is held low, data from the storage register is transparent to the output buffers. When data in the output buffers is low, the DMOS transistor outputs are off. When data is high, the DMOS transistor outputs have sink-current capability. The SER OUT allows for cascading of the data from the shift register to additional devices.

Outputs are low-side, open-drain DMOS transistors with output ratings of 33-V to 100-mA continuous sink-current capability. Each output provides a 250-mA maximum current limit at T_C = 25°C. The current limit decreases as the junction temperature increases for additional device protection. The device also provides up to 2500 V of ESD protection when tested using the human-body model and the 200-V machine model.

The TPIC6C595 is characterized for operation over the operating case temperature range of −40°C to 125°C.

Device Information[1]

PART NUMBER	PACKAGE	BODY SIZE (NOM)
TPIC6C595	SOIC (16)	9.90 mm × 3.91 mm
	TSSOP (16)	5.00 mm × 4.40 mm
	PDIP (16)	19.30 mm × 6.35 mm

(1) For all available packages, see the orderable addendum at the end of the data sheet.

Logic Symbol

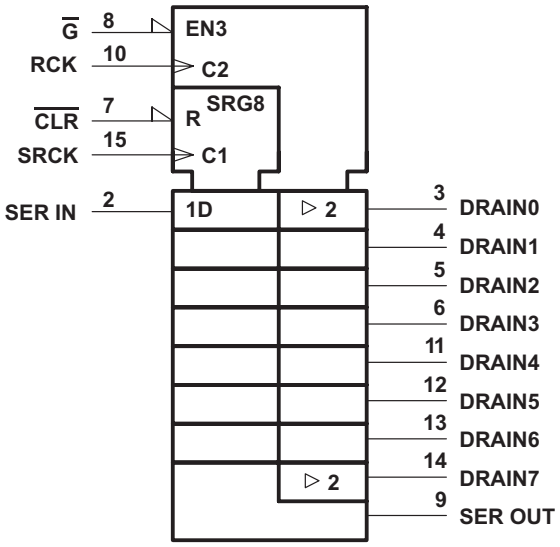

This symbol is in accordance with ANSI/IEEE Std 91-1984 and IEC Publication 617-12.

An IMPORTANT NOTICE at the end of this data sheet addresses availability, warranty, changes, use in safety-critical applications, intellectual property matters and other important disclaimers. PRODUCTION DATA.

Table of Contents

1 Features ... 1
2 Applications ... 1
3 Description ... 1
4 Revision History ... 2
5 Pin Configuration and Functions ... 3
6 Specifications ... 4
6.1 Absolute Maximum Ratings ... 4
6.2 ESD Ratings ... 4
6.3 Recommended Operating Conditions ... 4
6.4 Thermal Information ... 5
6.5 Electrical Characteristics ... 5
6.6 Switching Characteristics ... 6
6.7 Typical Characteristics ... 7
7 Parameter Measurement Information ... 9
8 Detailed Description ... 11
8.1 Overview ... 11
8.2 Functional Block Diagram ... 11
8.3 Feature Description ... 12
8.4 Device Functional Modes ... 12
9 Application and Implementation ... 13
9.1 Application Information ... 13
9.2 Typical Application ... 13
10 Power Supply Recommendations ... 15
11 Layout ... 15
11.1 Layout Guidelines ... 15
11.2 Layout Example ... 16
11.3 Thermal Considerations ... 17
12 Device and Documentation Support ... 18
12.1 Community Resources ... 18
12.2 Trademarks ... 18
12.3 Electrostatic Discharge Caution ... 18
12.4 Glossary ... 18
13 Mechanical, Packaging, and Orderable Information ... 18

4 Revision History

NOTE: Page numbers for previous revisions may differ from page numbers in the current version.

Changes from Revision C (July 1998) to Revision D	Page
• Added *ESD Ratings* table, *Feature Description* section, *Device Functional Modes*, *Application and Implementation* section, *Power Supply Recommendations* section, *Layout* section, *Device and Documentation Support* section, and *Mechanical, Packaging, and Orderable Information* section	1

Copyright © 1998–2015, Texas Instruments Incorporated

5 Pin Configuration and Functions

D, PW, or N Package
16-Pin SOIC, TSSOP, or PDIP
Top View

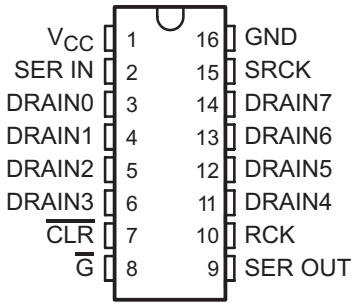

Pin Functions

PIN		I/O	DESCRIPTION
NAME	NO.		
CLR	7	I	Shift register clear, active-low
DRAIN0	3	O	Open-drain output
DRAIN1	4	O	Open-drain output
DRAIN2	5	O	Open-drain output
DRAIN3	6	O	Open-drain output
DRAIN4	11	O	Open-drain output
DRAIN5	12	O	Open-drain output
DRAIN6	13	O	Open-drain output
DRAIN7	14	O	Open-drain output
G	8	I	Output enable, active-low
GND	16	—	Power ground
RCK	10	I	Register clock
SER IN	2	I	Serial data input
SER OUT	9	O	Serial data output
SRCK	15	I	Shift register clock
V_{CC}	1	I	Power supply

Copyright © 1998–2015, Texas Instruments Incorporated

6 Specifications

6.1 Absolute Maximum Ratings

over operating free-air temperature range (unless otherwise noted) (1)

		MIN	MAX	UNIT
V_{CC}	Logic supply voltage (2)	–0.3	7	V
V_I	Logic input voltage	–0.3	7	V
V_{DS}	Power DMOS drain-to-source voltage (3)	–0.3	33	V
	Continuous source-to-drain diode anode current	0	250	mA
	Pulsed source-to-drain diode anode current (4)	0	500	mA
I_D	Pulsed drain current, each output, all outputs on, T_C = 25°C (4)	0	250	mA
I_D	Continuous drain current, each output, all outputs on, T_C = 25°C (4)	0	100	mA
I_{DM}	Peak drain current single output, T_C = 25°C (4)	0	250	mA
E_{AS}	Single-pulse avalanche energy (see Figure 11)	0	30	mJ
I_{AS}	Avalanche current (5)	0	200	mA
	Continuous total dissipation	See *Thermal Information*		
T_J	Operating virtual junction temperature	–40	150	°C
T_C	Operating case temperature	–40	125	°C
T_{stg}	Storage temperature	–65	150	°C

(1) Stresses beyond those listed under *Absolute Maximum Ratings* may cause permanent damage to the device. These are stress ratings only, which do not imply functional operation of the device at these or any other conditions beyond those indicated under *Recommended Operating Conditions*. Exposure to absolute-maximum-rated conditions for extended periods may affect device reliability.
(2) All voltage values are with respect to GND.
(3) Each power DMOS source is internally connected to GND.
(4) Pulse duration ≤ 100 µs and duty cycle ≤ 2%.
(5) DRAIN supply voltage = 15 V, starting junction temperature (T_{JS}) = 25°C, L = 1.5 H, I_{AS} = 200 mA (see Figure 11).

6.2 ESD Ratings

			VALUE	UNIT
$V_{(ESD)}$	Electrostatic discharge	Human-body model (HBM), per AEC Q100-002 (1)	±2500	V
		Charged-device model (CDM), per AEC Q100-011	±200	

(1) AEC Q100-002 indicates that HBM stressing shall be in accordance with the ANSI/ESDA/JEDEC JS-001 specification.

6.3 Recommended Operating Conditions

over operating free-air temperature range (unless otherwise noted)

		MIN	MAX	UNIT
V_{CC}	Logic supply voltage	4.5	5.5	V
V_{IH}	High-level input voltage	0.85 V_{CC}		V
V_{IL}	Low-level input voltage		0.15 V_{CC}	V
	Pulsed drain output current, T_C = 25°C, V_{CC} = 5 V, all outputs on (1) (2) (see Figure 7)		250	mA
t_{su}	Setup time, SER IN high before SRCKM ↑ (see Figure 9)	20		ns
t_h	Hold time, SER IN high after SRCKM ↑, (see Figure 9)	20		ns
t_w	Pulse duration (see Figure 9)	40		ns
T_C	Operating case temperature	–40	125	°C

(1) Pulse duration ≤ 100 µs and duty cycle ≤ 2%.
(2) Technique should limit $T_J - T_C$ to 10°C maximum.

Copyright © 1998–2015, Texas Instruments Incorporated

6.4 Thermal Information

THERMAL METRIC[1]		TPIC6C595			UNIT
		D (SOIC)	N (PDIP)	PW (TSSOP)	
		16 PINS	16 PINS	16 PINS	
$R_{\theta JA}$	Junction-to-ambient thermal resistance	82.3	51.5	109.7	°C/W
$R_{\theta JC(top)}$	Junction-to-case (top) thermal resistance	39.7	31.4	44.6	°C/W
$R_{\theta JB}$	Junction-to-board thermal resistance	41.4	38.8	54.8	°C/W
ψ_{JT}	Junction-to-top characterization parameter	11.3	23.6	5	°C/W
ψ_{JB}	Junction-to-board characterization parameter	39.5	31.3	54.2	°C/W
$R_{\theta JC(bot)}$	Junction-to-case (bottom) thermal resistance	N/A	N/A	N/A	°C/W

(1) For more information about traditional and new thermal metrics, see the *Semiconductor and IC Package Thermal Metrics* application report, SPRA953.

6.5 Electrical Characteristics

over operating free-air temperature range (unless otherwise noted)

PARAMETER		TEST CONDITIONS		MIN	TYP	MAX	UNIT
$V_{(BR)DSX}$	Drain-to-source breakdown voltage	I_D = 1 mA		33	37		V
V_{SD}	Source-to-drain diode forward voltage	I_F = 100 mA			0.85	1.2	V
V_{OH}	High-level output voltage, SER OUT	I_{OH} = − 20 µA,	V_{CC} = 4.5 V	4.4	4.49		V
		I_{OH} = − 4 mA,	V_{CC} = 4.5 V	4	4.2		
V_{OL}	Low-level output voltage, SER OUT	I_{OL} = 20 µA,	V_{CC} = 4.5 V		0.005	0.1	V
		I_{OL} = 4 mA,	V_{CC} = 4.5 V		0.3	0.5	
I_{IH}	High-level input current	V_{CC} = 5.5 V,	$V_I = V_{CC}$			1	µA
I_{IL}	Low-level input current	V_{CC} = 5.5 V,	V_I = 0			–1	µA
I_{CC}	Logic supply current	V_{CC} = 5.5 V	All outputs off		20	200	µA
			All outputs on		150	500	
$I_{CC(FRQ)}$	Logic supply current at frequency	f_{SRCK} = 5 MHz, All outputs off,	C_L = 30 pF, See Figure 9 and Figure 2		1.2	5	mA
I_N	Nominal current	$V_{DS(on)}$ = 0.5 V, T_C = 85°C	$I_N = I_D$, See (1)(2)(3)		90		mA
I_{DSX}	Off-state drain current	V_{DS} = 30 V,	V_{CC} = 5.5 V		0.1	0.2	µA
		V_{DS} = 30 V T_C = 125°C	V_{CC} = 5.5 V		0.15	0.3	
$r_{DS(on)}$	Static drain-source on-state resistance	I_D = 50 mA, V_{CC} = 4.5 V	See (1) and (2) and Figure 3 and Figure 4		6.5	9	Ω
		I_D = 50 mA, T_C = 125°C, V_{CC} = 4.5 V			9.9	12	
		I_D = 100 mA, V_{CC} = 4.5 V			6.8	10	

(1) Technique should limit $T_J - T_C$ to 10°C maximum.
(2) These parameters are measured with voltage-sensing contacts separate from the current-carrying contacts.
(3) Nominal current is defined for a consistent comparison between devices from different sources. It is the current that produces a voltage drop of 0.5 V at T_C = 85°C.

Copyright © 1998–2015, Texas Instruments Incorporated

6.6 Switching Characteristics

V_{CC} = 5 V, T_C = 25°C

PARAMETER		TEST CONDITIONS	MIN	TYP	MAX	UNIT
t_{PLH}	Propagation delay time, low-to-high-level output from $\overline{G}$	C_L = 30 pF, I_D = 75 mA, See Figure 8, Figure 9 and Figure 5		80		ns
t_{PHL}	Propagation delay time, high-to-low-level output from $\overline{G}$			50		ns
t_{pd}	Propagation delay time, SRCK↓ to SEROUT			15		ns
t_r	Rise time, drain output			100		ns
t_f	Fall time, drain output			80		ns
t_a	Reverse-recovery-current rise time	I_F = 100 mA, di/dt = 10 A/µs(1) (2), See Figure 10		100		ns
t_{rr}	Reverse-recovery time			120		

(1) Technique should limit $T_J - T_C$ to 10°C maximum.
(2) These parameters are measured with voltage-sensing contacts separate from the current-carrying contacts.

Copyright © 1998–2015, Texas Instruments Incorporated

6.7 Typical Characteristics

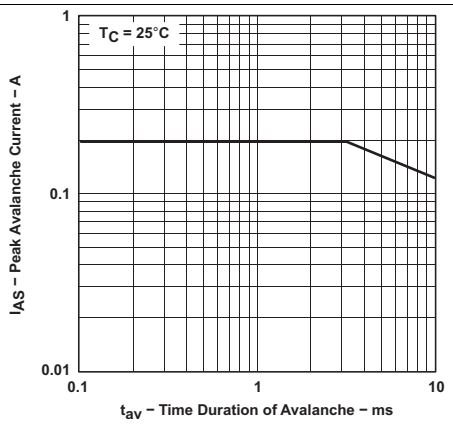

Figure 1. Peak Avalanche Current vs Time Duration of Avalanche

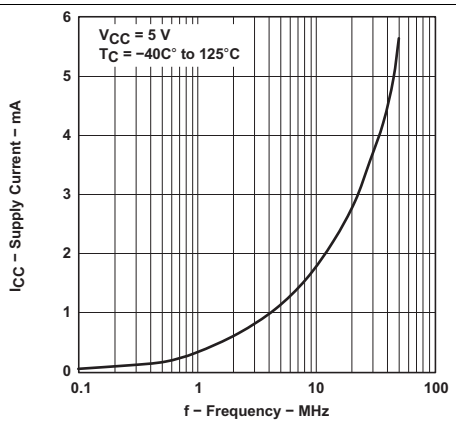

Figure 2. Supply Current vs Frequency

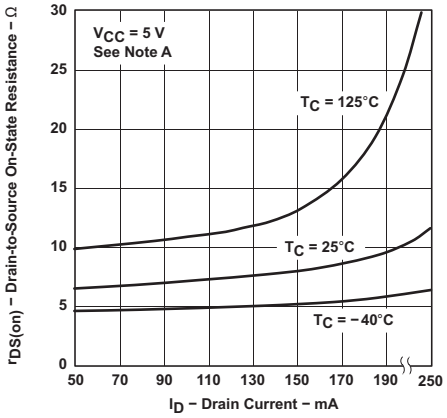

Technique should limit $T_J - T_C$ to 10°C maximum.

Figure 3. Drain-to-Source On-State Resistance vs Drain Current

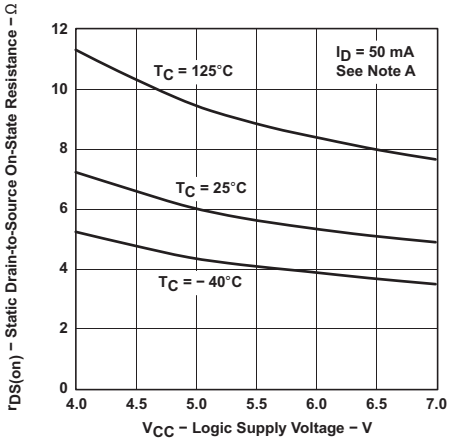

Technique should limit $T_J - T_C$ to 10°C maximum

Figure 4. Static Drain-to-Source On-State Resistance vs Logic Supply Voltage

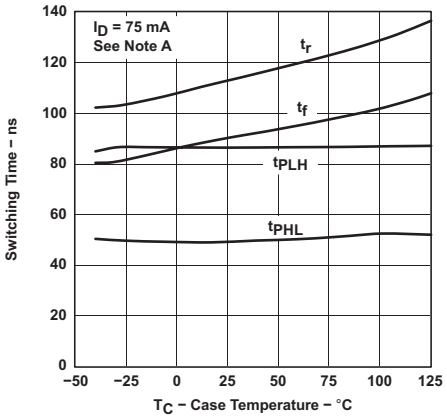

Technique should limit $T_J - T_C$ to 10°C maximum

Figure 5. Switching Time vs Case Temperature

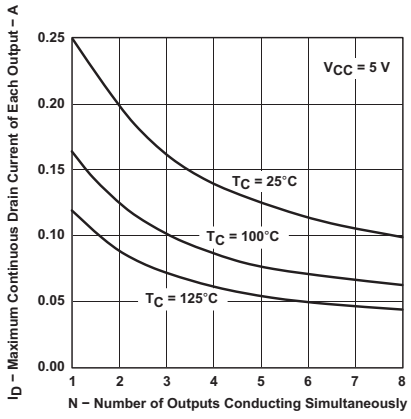

Figure 6. Maximum Continuous Drain Current of Each Output vs Number of Outputs Conducting Simultaneously

Copyright © 1998–2015, Texas Instruments Incorporated

Typical Characteristics (continued)

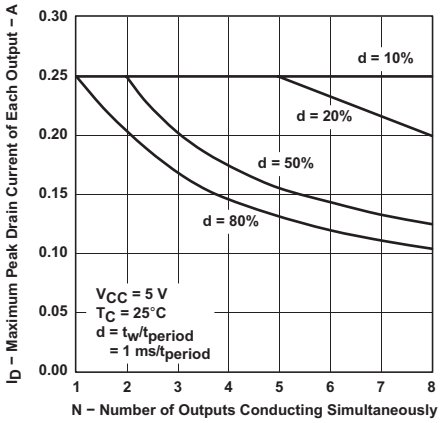

Figure 7. Maximum Peak Drain Current of Each Output vs Number of Outputs Conducting Simultaneously

Copyright © 1998–2015, Texas Instruments Incorporated

7 Parameter Measurement Information

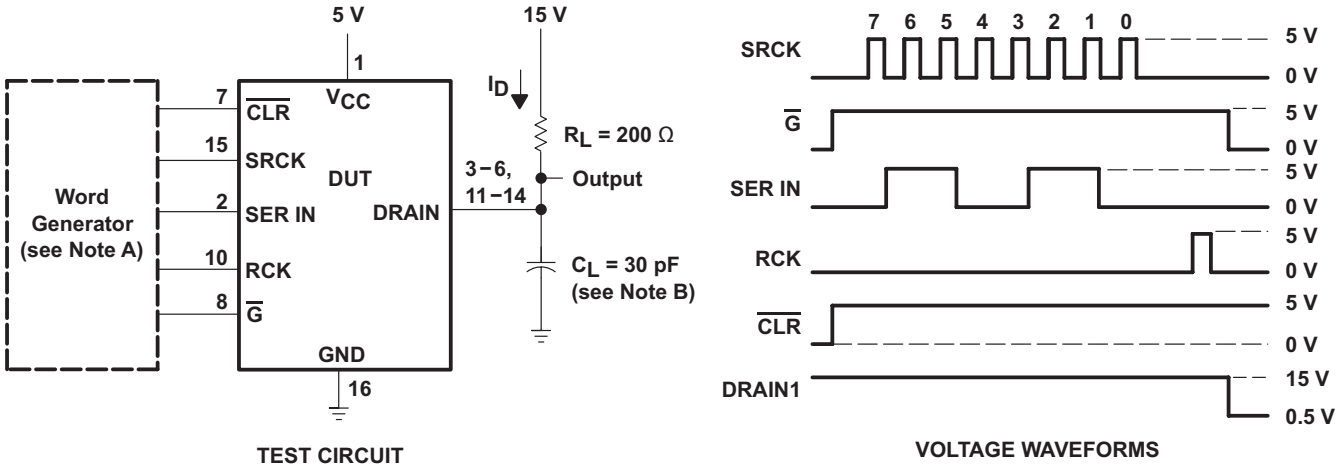

NOTES: A. The word generator has the following characteristics: $t_r \le 10$ ns, $t_f \le 10$ ns, $t_w = 300$ ns, pulsed repetition rate (PRR) = 5 kHz, $Z_O = 50\ \Omega$.
B. C_L includes probe and jig capacitance.

Figure 8. Resistive-Load Test Circuit and Voltage Waveforms

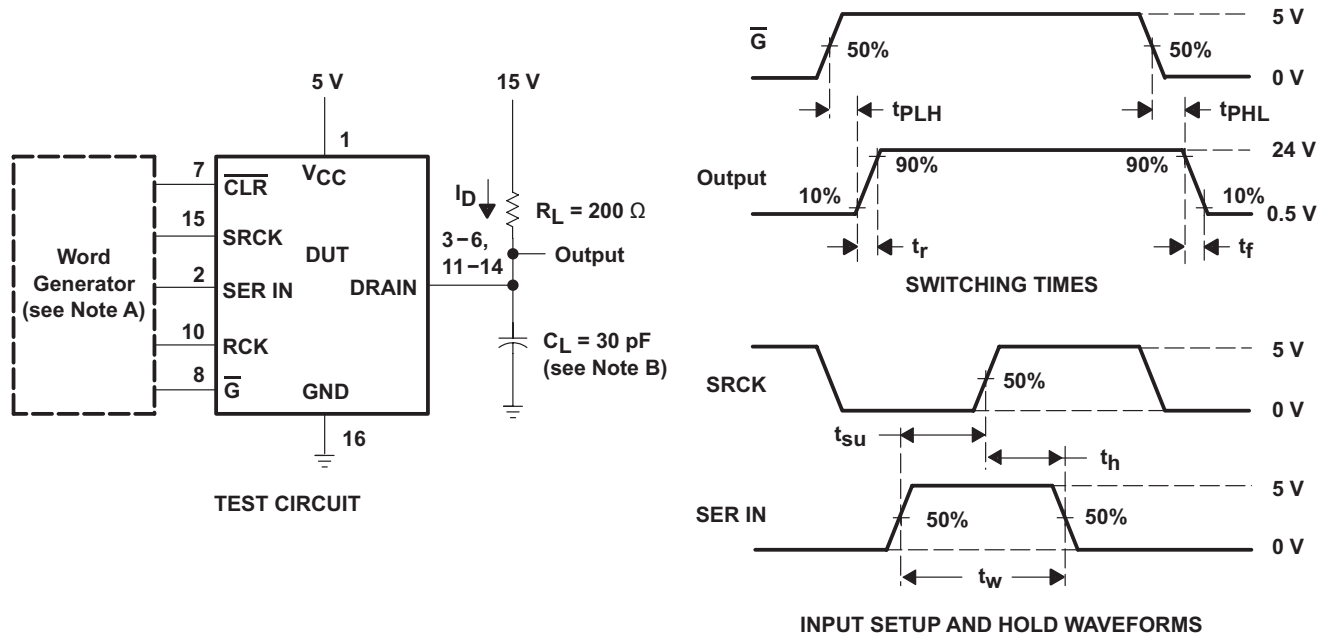

NOTES: A. The word generator has the following characteristics: $t_r \le 10$ ns, $t_f \le 10$ ns, $t_w = 300$ ns, pulsed repetition rate (PRR) = 5 kHz, $Z_O = 50\ \Omega$.
B. C_L includes probe and jig capacitance.

Figure 9. Test Circuit, Switching Times, and Voltage Waveforms

Parameter Measurement Information (continued)

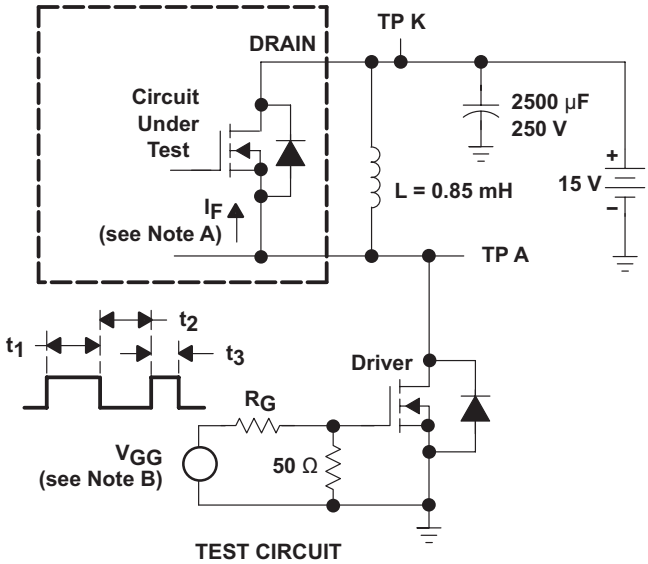

TEST CIRCUIT

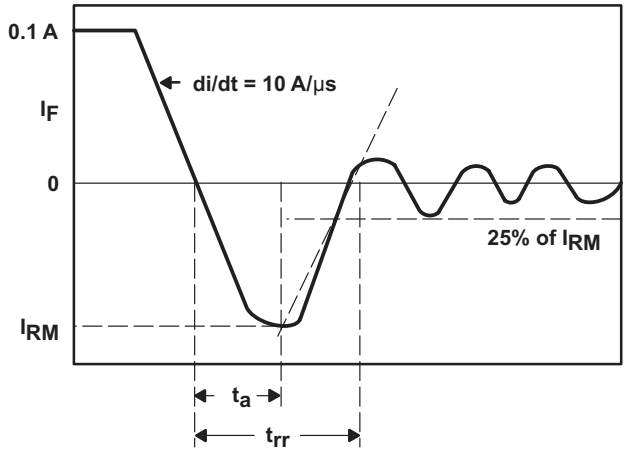

CURRENT WAVEFORM

NOTES: A. The DRAIN terminal under test is connected to the TP K test point. All other terminals are connected together and connected to the TP A test point.
B. The V_{GG} amplitude and R_G are adjusted for di/dt = 10 A/µs. A V_{GG} double-pulse train is used to set I_F = 0.1 A, where t_1 = 10 µs, t_2 = 7 µs, and t_3 = 3 µs.

Figure 10. Reverse-Recovery-Current Test Circuit and Waveforms of Source-to-Drain Diode

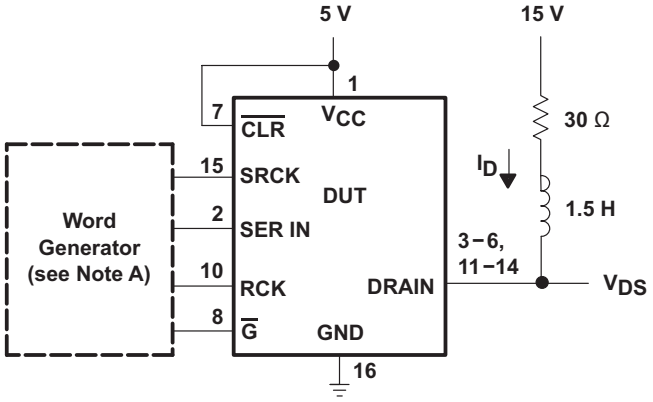

SINGLE-PULSE AVALANCHE ENERGY TEST CIRCUIT

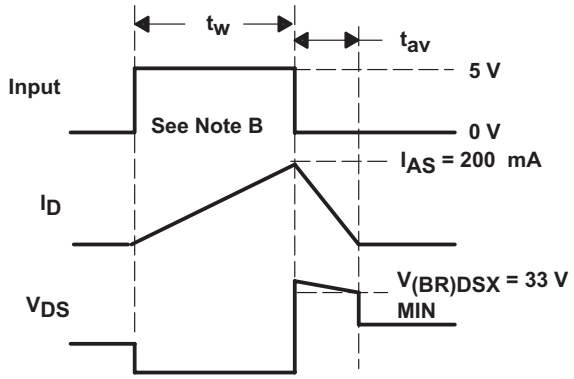

VOLTAGE AND CURRENT WAVEFORMS

NOTES: A. The word generator has the following characteristics: $t_r \le 10$ ns, $t_f \le 10$ ns, Z_O = 50 Ω.
B. Input pulse duration, t_w, is increased until peak current I_{AS} = 200 mA.
Energy test level is defined as $E_{AS} = I_{AS} \times V_{(BR)DSX} \times t_{av}/2$ = 30 mJ.

Figure 11. Single-Pulse Avalanche Energy Test Circuit and Waveforms

Copyright © 1998–2015, Texas Instruments Incorporated

8 Detailed Description

8.1 Overview

The TPIC6C595 is a monolithic, medium-voltage, low-current power 8-bit shift register designed to drive relatively moderate load power such as LEDs. The device contains a built-in voltage clamp on the outputs for inductive transient protection, so it can also drive relays, solenoids, and other low-current or medium-voltage loads.

8.2 Functional Block Diagram

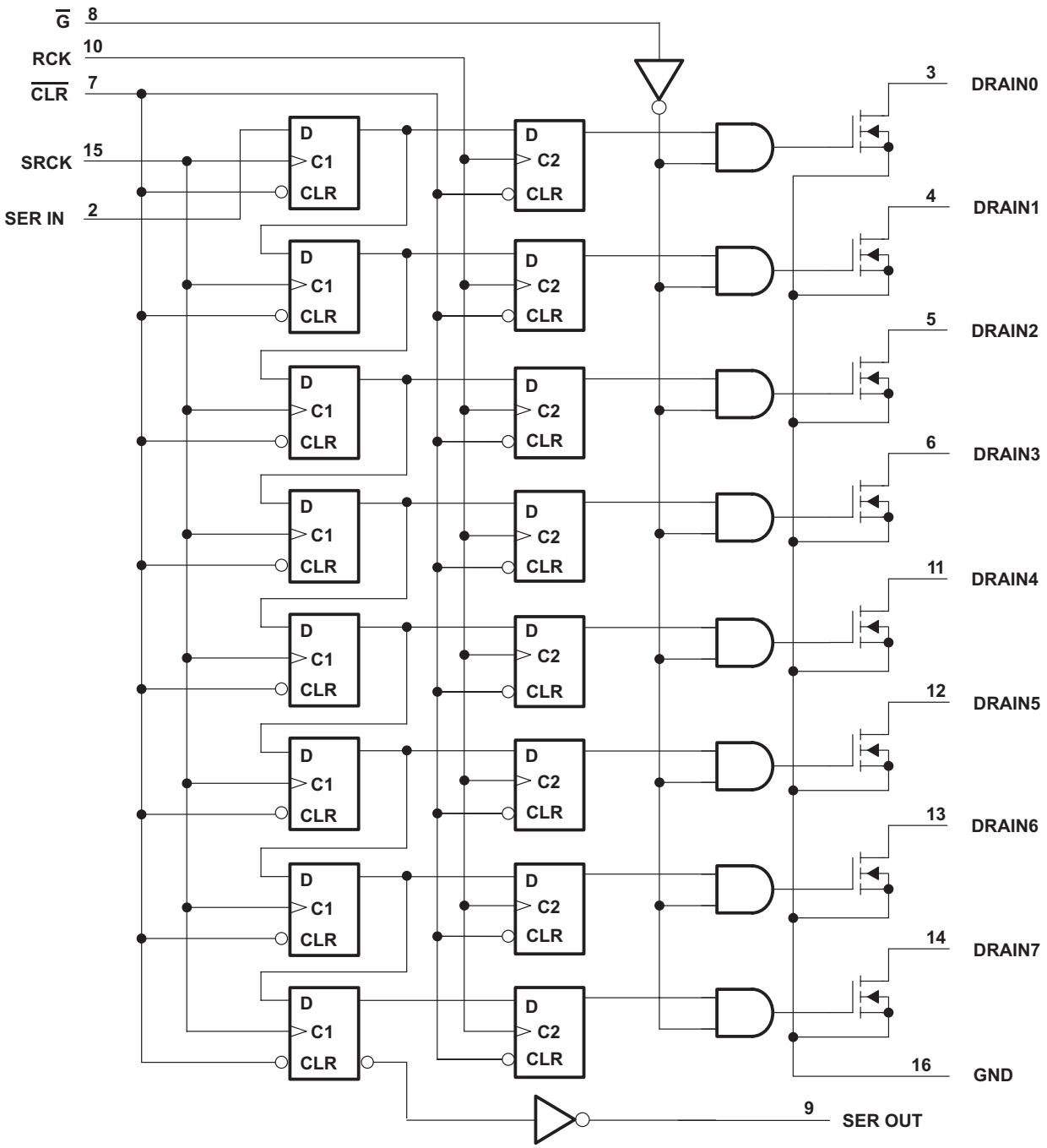

Figure 12. Logic Diagram (Positive Logic)

8.3 Feature Description

8.3.1 Serial-In Interface

This device contains an 8-bit serial-in, parallel-out shift register that feeds an 8-bit D-type storage register. Data transfers through both the shift and storage registers on the rising edge of the shift register clock (SRCK) and the register clock (RCK), respectively. The storage register transfers data to the output buffer when shift register clear (CLR) is high.

8.3.2 Clear Register

A logical low on (CLR) clears all registers in the device. TI suggests clearing the device during power up or initialization.

8.3.3 Output Control

Holding the output enable (G) high holds all data in the output buffers low, and all drain outputs are off. Holding (G) low makes data from the storage register transparent to the output buffers. When data in the output buffers is low, the DMOS transistor outputs are off. When data is high, the DMOS transistor outputs have sink-current capability. This pin can also be used for global PWM dimming.

8.3.4 Cascaded Application

The serial output (SER OUT) allows for cascading of the data from the shift register to additional devices. Connect the device (SEROUT) pin to the next device (SERIN) for daisy Chain.

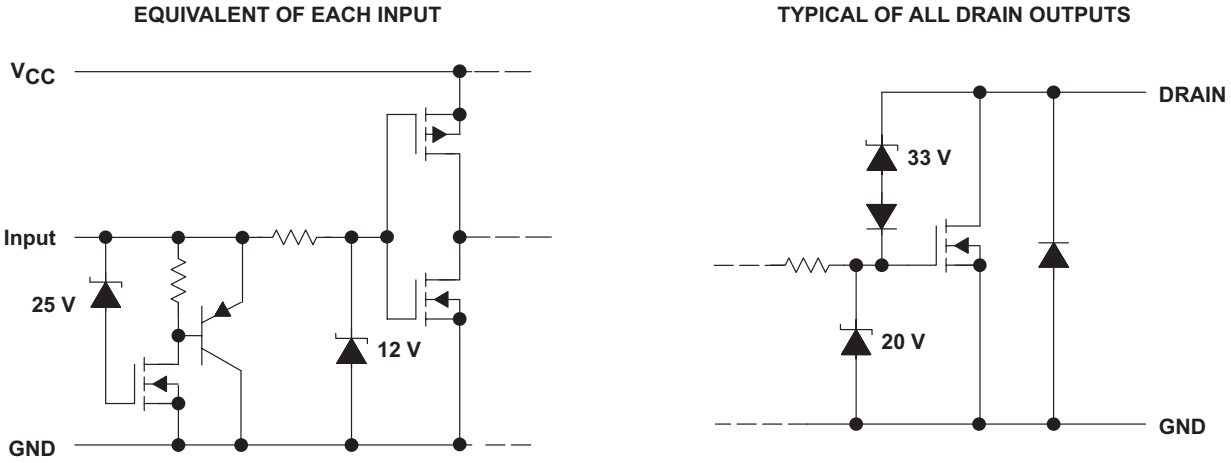

Figure 13. Schematic of Inputs and Outputs

8.3.5 Current Limit Function

Outputs are low-side, open-drain DMOS transistors with output ratings of 33 V and 100-mA continuous sink current capability. Each output provides a 250-mA typical current limit at TC = 25°C. The current limit decreases as the junction temperature increases for additional device protection.

8.4 Device Functional Modes

8.4.1 Operation With $V_{(VIN)}$ < 4.5 V (Minimum $V_{(VIN)}$)

This device works normally during 4.5 V ≤ $V_{(VIN)}$ ≤ 5.5 V, when operation voltage is lower than 4.5 V. TI can't ensure the behavior of device, including communication interface and current capability.

8.4.2 Operating With 5.5 V < $V_{(VIN)}$ < 6 V

This device works normally during this voltage range, but reliability issues may occur while the device works for a long time in this voltage range.

Copyright © 1998–2015, Texas Instruments Incorporated

9 Application and Implementation

NOTE

Information in the following applications sections is not part of the TI component specification, and TI does not warrant its accuracy or completeness. TI's customers are responsible for determining suitability of components for their purposes. Customers should validate and test their design implementation to confirm system functionality.

9.1 Application Information

The TPIC6C595 is a serial-in parallel-out, Power+LogicE 8-bit shift register with low-side switch DMOS outputs rating of 100 mA per channel. The device is designed for use in systems that require relatively moderate load power such as LEDs. The device contains a built-in voltage clamp on the outputs for inductive transient protection. Power driver applications include relays, solenoids, and other low current or medium-voltage loads. The following focuses on automotive cluster applications for the TPIC6C595.

9.2 Typical Application

The typical application of TPIC6C595 is automotive cluster driver. In this example, two TPIC6C595 power shift registers are cascaded and used to turn on LEDs in the cluster panel. In this case, the LED must be updated after all 16 bits of data have been loaded into the serial shift registers. MCU outputs the data to the serial input (SER IN) while clocking the shift register clock (SRCK). After the 16th clock, a pulse to the register clock (RCK) transfers the data to the storage registers. If output enable (G) is low, then the LEDs are turned on corresponding to the status word with ones being on and zeros off. With this simple scheme, MCU can use the SPI interface to turn on 16 LEDs using only two ICs as illustrated in Figure 14.

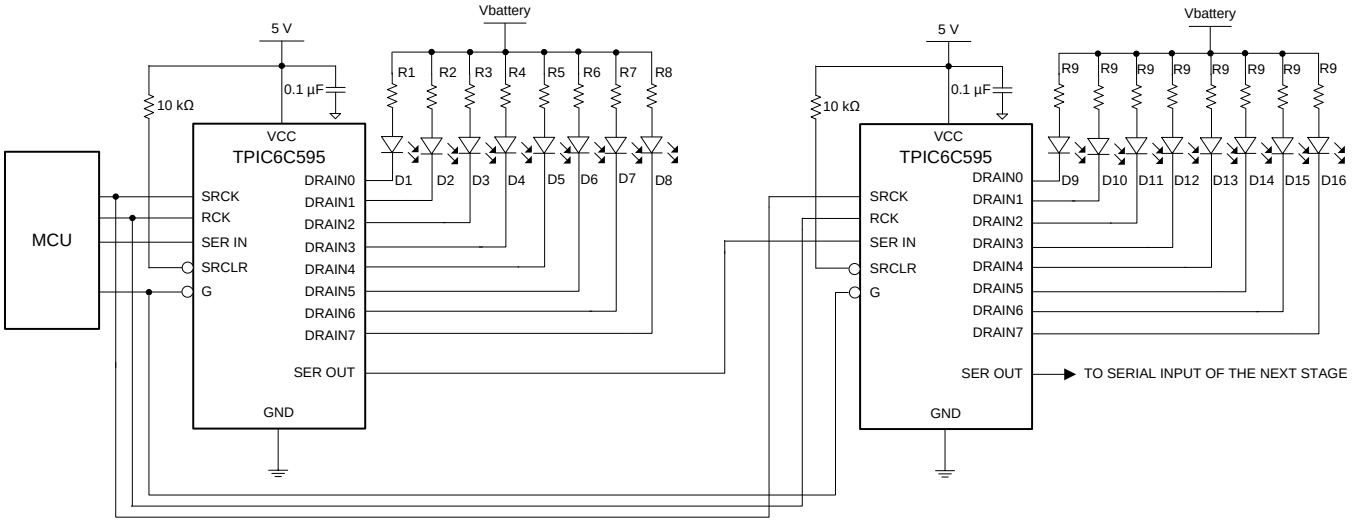

Figure 14. Typical Application Schematic

Typical Application (continued)

9.2.1 Design Requirements

Table 1 shows the design parameters for this typical application.

Table 1. Design Parameters

DESIGN PARAMETERS	EXAMPLE VALUE
Vsupply	9 V to 16 V
V(D1), V(D2), V(D3), V(D4), V(D5), V(D6),V(D7), V(D8)	2 V
V(D9), V(D10),V(D11), V(D12), V(D13), V(D14),V(D15), V(D16)	3.3 V
I(D1), I(D2), I(D3), I(D4), I(D5), I(D6),I(D7), I(D8)	20 mA when Vbattery is 12 V
I(D9), I(D10), I(D11), I(D12), I(D13), I(D14),I(D15), I(D16)	30 mA when Vbattery is 12 V

9.2.2 Detailed Design Procedure

9.2.2.1 Step-by-Step Design Procedure

To begin the design process, one must decide on a few parameters. The designer must know the following:

- Vsupply – LED supply is connected directly to the car battery, which has a voltage range from 9 V to 16 V, or fixed voltage. This application connects to the battery directly.
- V(Dx) – LED forward voltage
- I(Dx) – LED setting current when battery is 12 V.

9.2.2.1.1 R1, R2, R3, R4, R5, R6, R7, R8

$$R1 = R2 = R3 = R4 = R5 = R6 = R7 = R8 = (Vsupply – V(Dx)) / I(Dx) = (12\ V – 2\ V) / 0.02\ A = 500\ \Omega \quad (1)$$

When Vsupply is 9 V, I(D1) = I(D2) = I(D3) = I(D4) = I(D5) = I(D6) = I(D7) = I(D8) = (Vsupply – V(Dx)) / Rx = 14 mA.

When Vsupply is 16 V, I(D1) = I(D2) = I(D3) = I(D4) = I(D5) = I(D6) = I(D7) = I(D8) = (Vsupply – V(Dx)) / Rx = 28 mA.

9.2.2.1.2 R9, R10, R11, R12, R13, R14, R15, R16

$$R9 = R10 = R11 = R12 = R13 = R14 = R15 = R16 = (Vsupply – V(Dx)) / I(Dx) = (12\ V – 3.3\ V) / 0.03\ A = 290\ \Omega \quad (2)$$

When Vsupply is 9 V, I(D9) = I(D10) = I(D11) = I(D12) = I(D13) = I(D14) = I(D15) = I(D16) = (Vsupply – V(Dx)) / Rx = 19.7 mA.

When Vsupply is 16 V, I(D9) = I(D10) = I(D11) = I(D12) = I(D13) = I(D14) = I(D15) = I(D16) = (Vsupply – V(Dx)) / Rx = 43.8 mA.

NOTE

If customer can accept the current variation when battery voltage is changing, they can connect to battery directly. If customer needs the less variation of current, they must use the voltage regulator as supply voltage of LED, or change to constant current LED driver directly.

Copyright © 1998–2015, Texas Instruments Incorporated

9.2.3 Application Curve

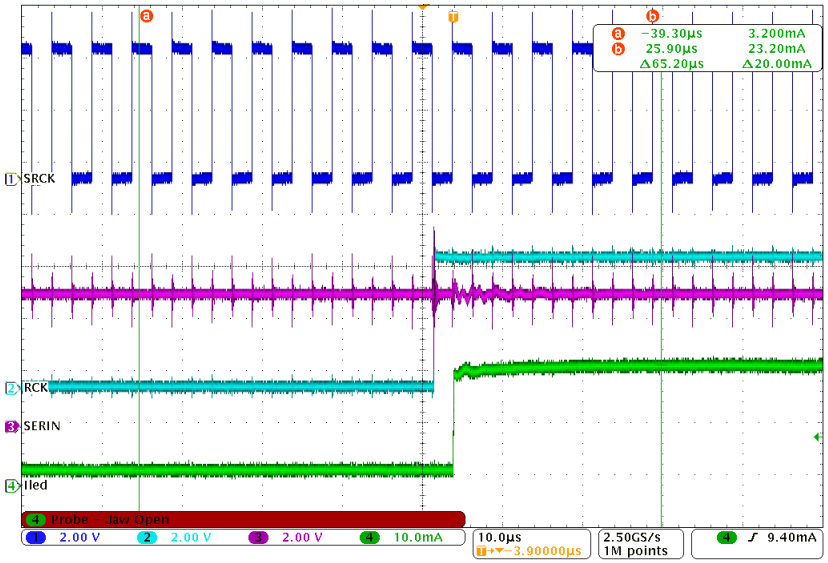

Figure 15. CH1 is SRCK, CH2 is RCK, CH3 is SERIN, CH4 is D1 current

10 Power Supply Recommendations

The TPIC6C595 device is designed to operate from an input voltage supply range from 4.5 V to 5.5 V. This input supply must be well regulated. TI recommends placing the ceramic bypass capacitors near the V_{CC} pin.

11 Layout

11.1 Layout Guidelines

There is no special layout requirement for the digital signal pin; the only requirement is placing the ceramic bypass capacitors near the corresponding pin. Because the TPIC6C595 device does not have a thermal shutdown protection function, to prevent thermal damage, T_J must be less than 150°C. If the total sink current is high, the power dissipation might be large. The devices are currently not available in the thermal pad package, so good PCB design can optimize heat transfer, which is absolutely essential for the long-term reliability of the device.

Maximize the copper coverage on the PCB to increase the thermal conductivity of the board, because the major heat-flow path from the package to the ambient is through the copper on the PCB. Maximum copper is extremely important when the design does not include heat sinks attached to the PCB on the other side of the package.

- Add as many thermal vias as possible directly under the package ground pad to optimize the thermal conductivity of the board.
- All thermal vias should be either plated shut or plugged and capped on both sides of the board to prevent solder voids. To ensure reliability and performance, the solder coverage should be at least 85%.

Copyright © 1998–2015, Texas Instruments Incorporated

11.2 Layout Example

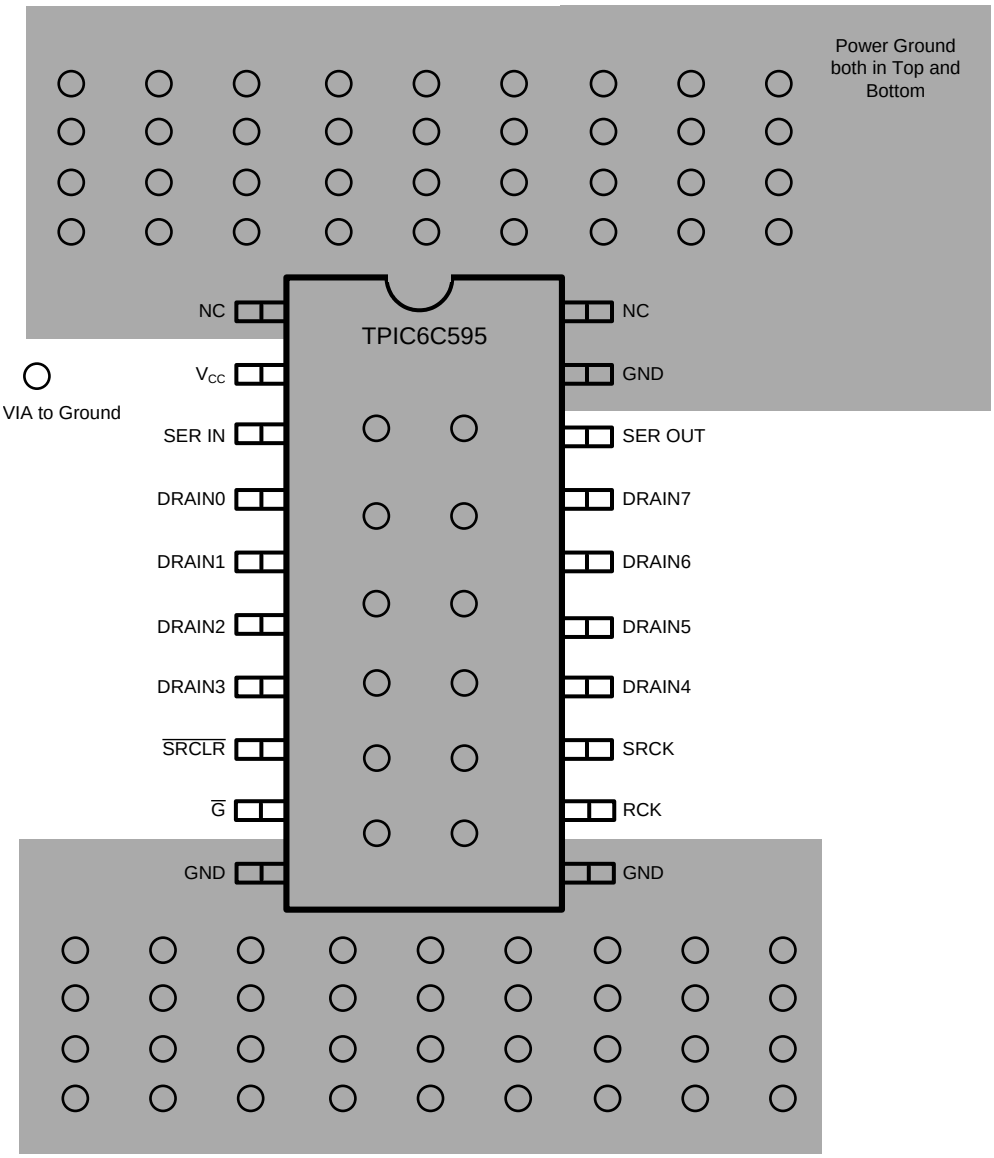

Figure 16. TPIC6C595 Recommended Layout

Copyright © 1998–2015, Texas Instruments Incorporated

11.3 Thermal Considerations

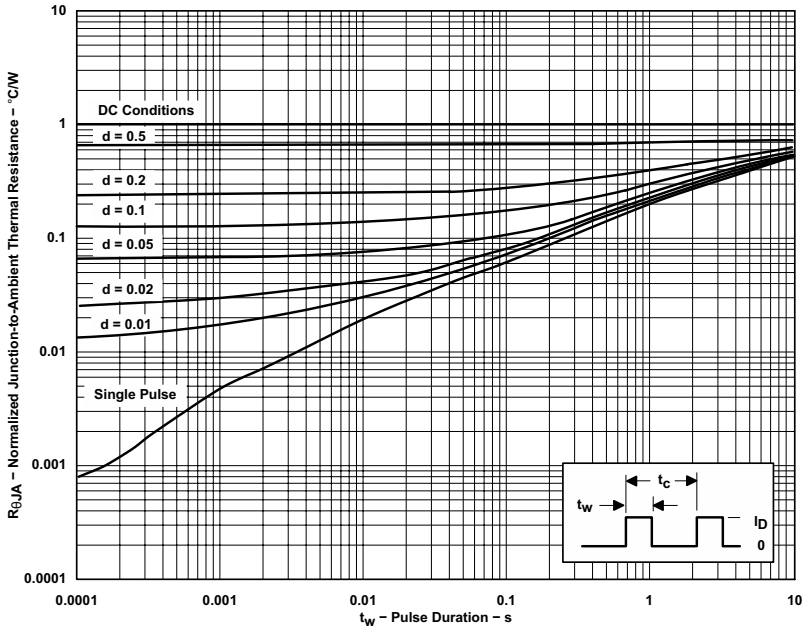

A. Device (D package) mounted on FR4 printed-circuit board with no heat sink

B. $Z_{\theta A(t)} = r(t)\ R_{\theta JA}$

C. t_w = pulse duration

D. t_c = cycle time

E. d = duty cycle = t_w / t_c

Figure 17. D Package, Normalized Junction-to-Ambient Thermal Resistance vs Pulse Duration

12 Device and Documentation Support

12.1 Community Resources

The following links connect to TI community resources. Linked contents are provided "AS IS" by the respective contributors. They do not constitute TI specifications and do not necessarily reflect TI's views; see TI's Terms of Use.

TI E2E™ Online Community ***TI's Engineer-to-Engineer (E2E) Community.*** Created to foster collaboration among engineers. At e2e.ti.com, you can ask questions, share knowledge, explore ideas and help solve problems with fellow engineers.

Design Support ***TI's Design Support*** Quickly find helpful E2E forums along with design support tools and contact information for technical support.

12.2 Trademarks

E2E is a trademark of Texas Instruments.
All other trademarks are the property of their respective owners.

12.3 Electrostatic Discharge Caution



These devices have limited built-in ESD protection. The leads should be shorted together or the device placed in conductive foam during storage or handling to prevent electrostatic damage to the MOS gates.

12.4 Glossary

SLYZ022 — *TI Glossary*.

This glossary lists and explains terms, acronyms, and definitions.

13 Mechanical, Packaging, and Orderable Information

The following pages include mechanical, packaging, and orderable information. This information is the most current data available for the designated devices. This data is subject to change without notice and revision of this document. For browser-based versions of this data sheet, refer to the left-hand navigation.

Copyright © 1998–2015, Texas Instruments Incorporated

PACKAGING INFORMATION

Orderable Device	Status (1)	Package Type	Package Drawing	Pins	Package Qty	Eco Plan (2)	Lead finish/ Ball material (6)	MSL Peak Temp (3)	Op Temp (°C)	Device Marking (4/5)	Samples
TPIC6C595D	ACTIVE	SOIC	D	16	40	RoHS & Green	NIPDAU	Level-1-260C-UNLIM	-40 to 125	TPIC6C595	Samples
TPIC6C595DG4	ACTIVE	SOIC	D	16	40	RoHS & Green	NIPDAU	Level-1-260C-UNLIM	-40 to 125	6C595	Samples
TPIC6C595DR	ACTIVE	SOIC	D	16	2500	RoHS & Green	NIPDAU	Level-1-260C-UNLIM	-40 to 125	TPIC6C595	Samples
TPIC6C595DRG4	ACTIVE	SOIC	D	16	2500	RoHS & Green	NIPDAU	Level-1-260C-UNLIM	-40 to 125	6C595	Samples
TPIC6C595N	ACTIVE	PDIP	N	16	25	RoHS & Green	NIPDAU	N / A for Pkg Type	-40 to 125	TPIC6C595	Samples
TPIC6C595PW	ACTIVE	TSSOP	PW	16	90	RoHS & Green	NIPDAU	Level-1-260C-UNLIM	-40 to 125	6C595PW	Samples
TPIC6C595PWG4	LIFEBUY				90	RoHS & Green	NIPDAU	Level-1-260C-UNLIM		6C595PW	
TPIC6C595PWR	ACTIVE	TSSOP	PW	16	2000	RoHS & Green	NIPDAU	Level-1-260C-UNLIM	-40 to 125	6C595PW	Samples
TPIC6C595PWRG4	ACTIVE	TSSOP	PW	16	2000	RoHS & Green	NIPDAU	Level-1-260C-UNLIM		6C595PW	Samples

(1) The marketing status values are defined as follows:
ACTIVE: Product device recommended for new designs.
LIFEBUY: TI has announced that the device will be discontinued, and a lifetime-buy period is in effect.
NRND: Not recommended for new designs. Device is in production to support existing customers, but TI does not recommend using this part in a new design.
PREVIEW: Device has been announced but is not in production. Samples may or may not be available.
OBSOLETE: TI has discontinued the production of the device.

(2) **RoHS:** TI defines "RoHS" to mean semiconductor products that are compliant with the current EU RoHS requirements for all 10 RoHS substances, including the requirement that RoHS substance do not exceed 0.1% by weight in homogeneous materials. Where designed to be soldered at high temperatures, "RoHS" products are suitable for use in specified lead-free processes. TI may reference these types of products as "Pb-Free".
RoHS Exempt: TI defines "RoHS Exempt" to mean products that contain lead but are compliant with EU RoHS pursuant to a specific EU RoHS exemption.
Green: TI defines "Green" to mean the content of Chlorine (Cl) and Bromine (Br) based flame retardants meet JS709B low halogen requirements of <=1000ppm threshold. Antimony trioxide based flame retardants must also meet the <=1000ppm threshold requirement.

(3) MSL, Peak Temp. - The Moisture Sensitivity Level rating according to the JEDEC industry standard classifications, and peak solder temperature.

(4) There may be additional marking, which relates to the logo, the lot trace code information, or the environmental category on the device.

(5) Multiple Device Markings will be inside parentheses. Only one Device Marking contained in parentheses and separated by a "~" will appear on a device. If a line is indented then it is a continuation of the previous line and the two combined represent the entire Device Marking for that device.

(6) Lead finish/Ball material - Orderable Devices may have multiple material finish options. Finish options are separated by a vertical ruled line. Lead finish/Ball material values may wrap to two lines if the finish value exceeds the maximum column width.

Important Information and Disclaimer: The information provided on this page represents TI's knowledge and belief as of the date that it is provided. TI bases its knowledge and belief on information provided by third parties, and makes no representation or warranty as to the accuracy of such information. Efforts are underway to better integrate information from third parties. TI has taken and continues to take reasonable steps to provide representative and accurate information but may not have conducted destructive testing or chemical analysis on incoming materials and chemicals. TI and TI suppliers consider certain information to be proprietary, and thus CAS numbers and other limited information may not be available for release.

In no event shall TI's liability arising out of such information exceed the total purchase price of the TI part(s) at issue in this document sold by TI to Customer on an annual basis.

TAPE AND REEL INFORMATION

REEL DIMENSIONS

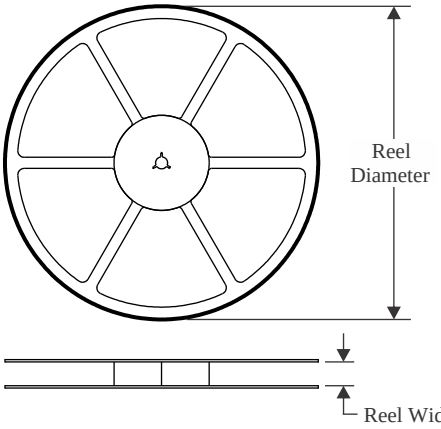

TAPE DIMENSIONS

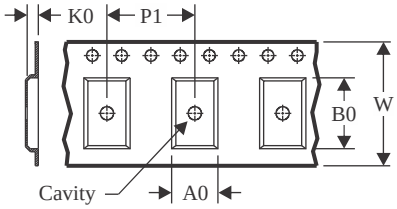

A0	Dimension designed to accommodate the component width
B0	Dimension designed to accommodate the component length
K0	Dimension designed to accommodate the component thickness
W	Overall width of the carrier tape
P1	Pitch between successive cavity centers

QUADRANT ASSIGNMENTS FOR PIN 1 ORIENTATION IN TAPE

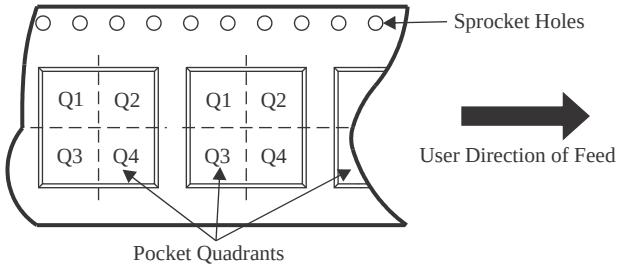

*All dimensions are nominal

Device	Package Type	Package Drawing	Pins	SPQ	Reel Diameter (mm)	Reel Width W1 (mm)	A0 (mm)	B0 (mm)	K0 (mm)	P1 (mm)	W (mm)	Pin1 Quadrant
TPIC6C595DR	SOIC	D	16	2500	330.0	16.4	6.5	10.3	2.1	8.0	16.0	Q1
TPIC6C595DRG4	SOIC	D	16	2500	330.0	16.4	6.5	10.3	2.1	8.0	16.0	Q1
TPIC6C595PWR	TSSOP	PW	16	2000	330.0	12.4	6.9	5.6	1.6	8.0	12.0	Q1
TPIC6C595PWRG4	TSSOP	PW	16	2000	330.0	12.4	6.9	5.6	1.6	8.0	12.0	Q1

TAPE AND REEL BOX DIMENSIONS

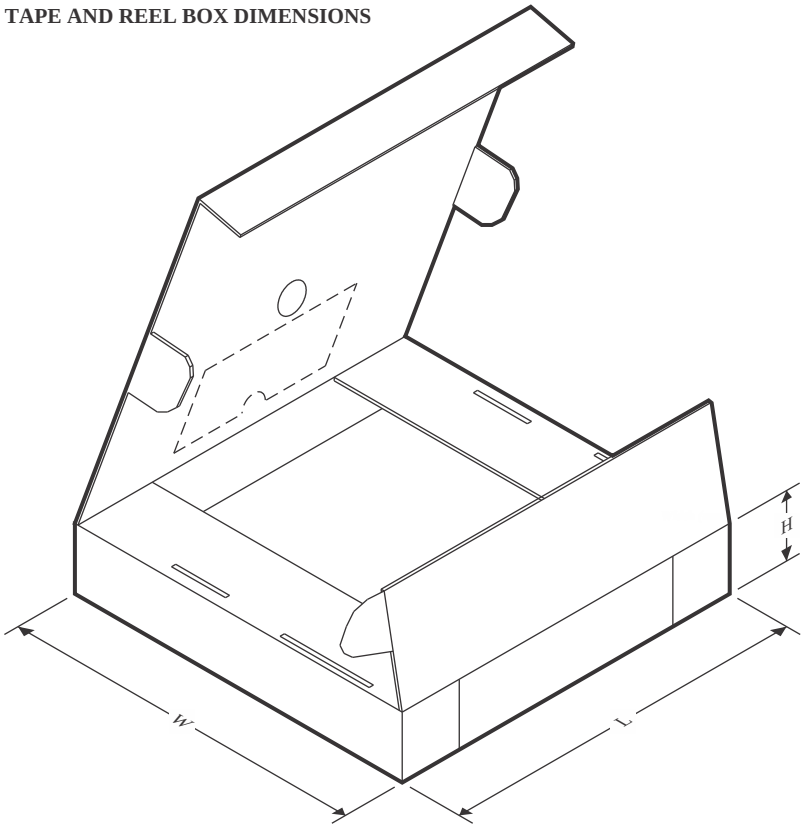

*All dimensions are nominal

Device	Package Type	Package Drawing	Pins	SPQ	Length (mm)	Width (mm)	Height (mm)
TPIC6C595DR	SOIC	D	16	2500	356.0	356.0	35.0
TPIC6C595DRG4	SOIC	D	16	2500	356.0	356.0	35.0
TPIC6C595PWR	TSSOP	PW	16	2000	350.0	350.0	43.0
TPIC6C595PWRG4	TSSOP	PW	16	2000	350.0	350.0	43.0

TUBE

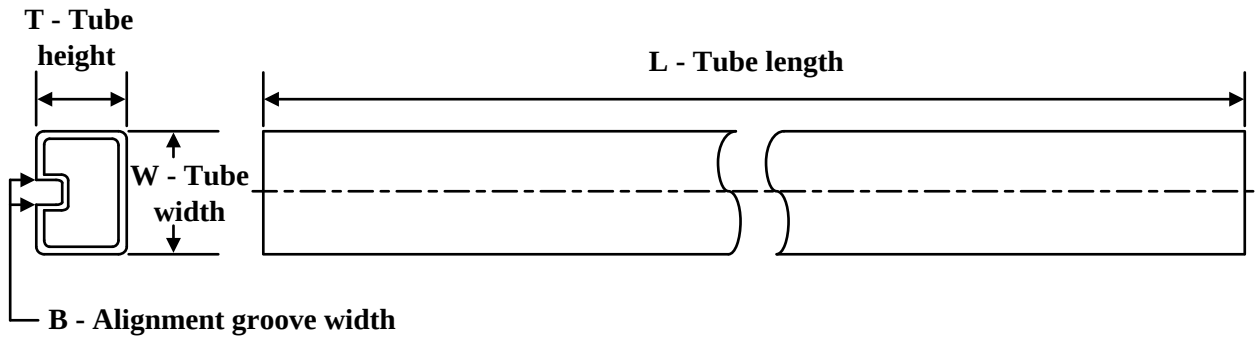

*All dimensions are nominal

Device	Package Name	Package Type	Pins	SPQ	L (mm)	W (mm)	T (µm)	B (mm)
TPIC6C595D	D	SOIC	16	40	506.6	8	3940	4.32
TPIC6C595D	D	SOIC	16	40	505.46	6.76	3810	4
TPIC6C595DG4	D	SOIC	16	40	505.46	6.76	3810	4
TPIC6C595DG4	D	SOIC	16	40	506.6	8	3940	4.32
TPIC6C595N	N	PDIP	16	25	506	13.97	11230	4.32
TPIC6C595PW	PW	TSSOP	16	90	530	10.2	3600	3.5

N (R–PDIP–T**)

PLASTIC DUAL–IN–LINE PACKAGE

16 PINS SHOWN

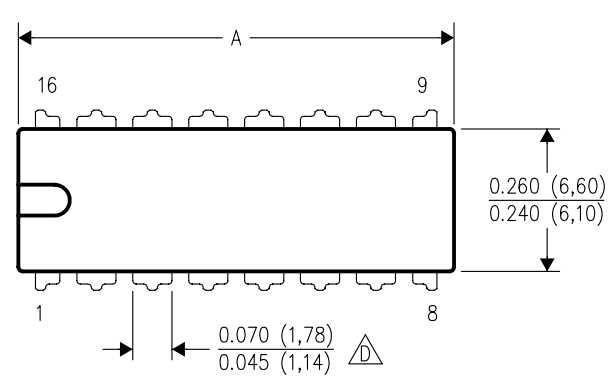

DIM \ PINS **	14	16	18	20
A MAX	0.775 (19,69)	0.775 (19,69)	0.920 (23,37)	1.060 (26,92)
A MIN	0.745 (18,92)	0.745 (18,92)	0.850 (21,59)	0.940 (23,88)
MS–001 VARIATION (C)	AA	BB	AC	AD

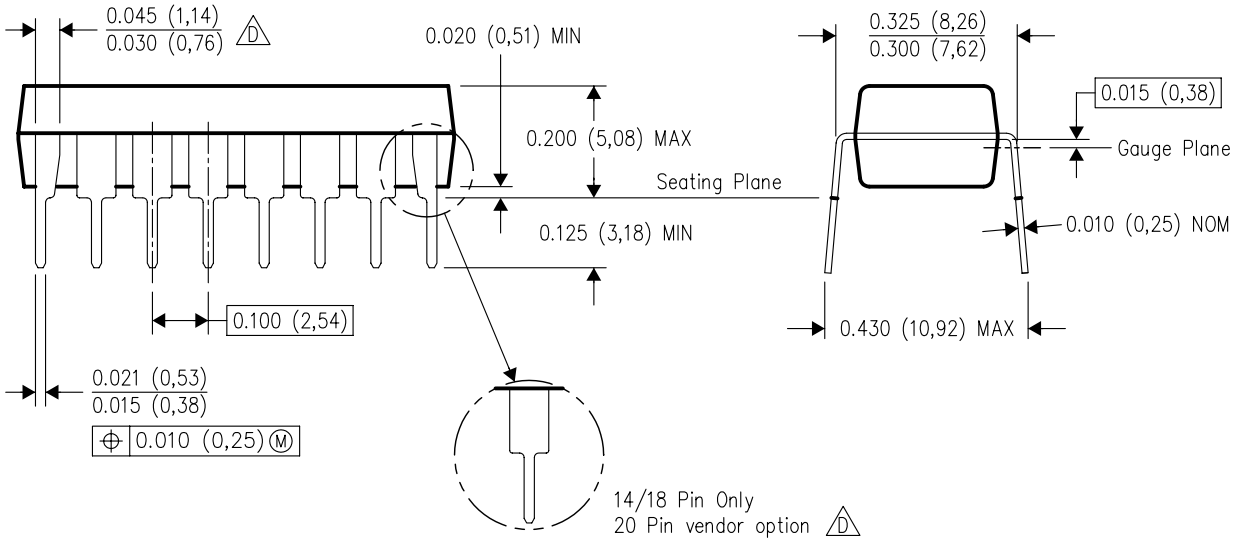

4040049/E 12/2002

NOTES:
A. All linear dimensions are in inches (millimeters).
B. This drawing is subject to change without notice.
C. Falls within JEDEC MS–001, except 18 and 20 pin minimum body length (Dim A).
D. The 20 pin end lead shoulder width is a vendor option, either half or full width.

D (R–PDSO–G16) PLASTIC SMALL OUTLINE

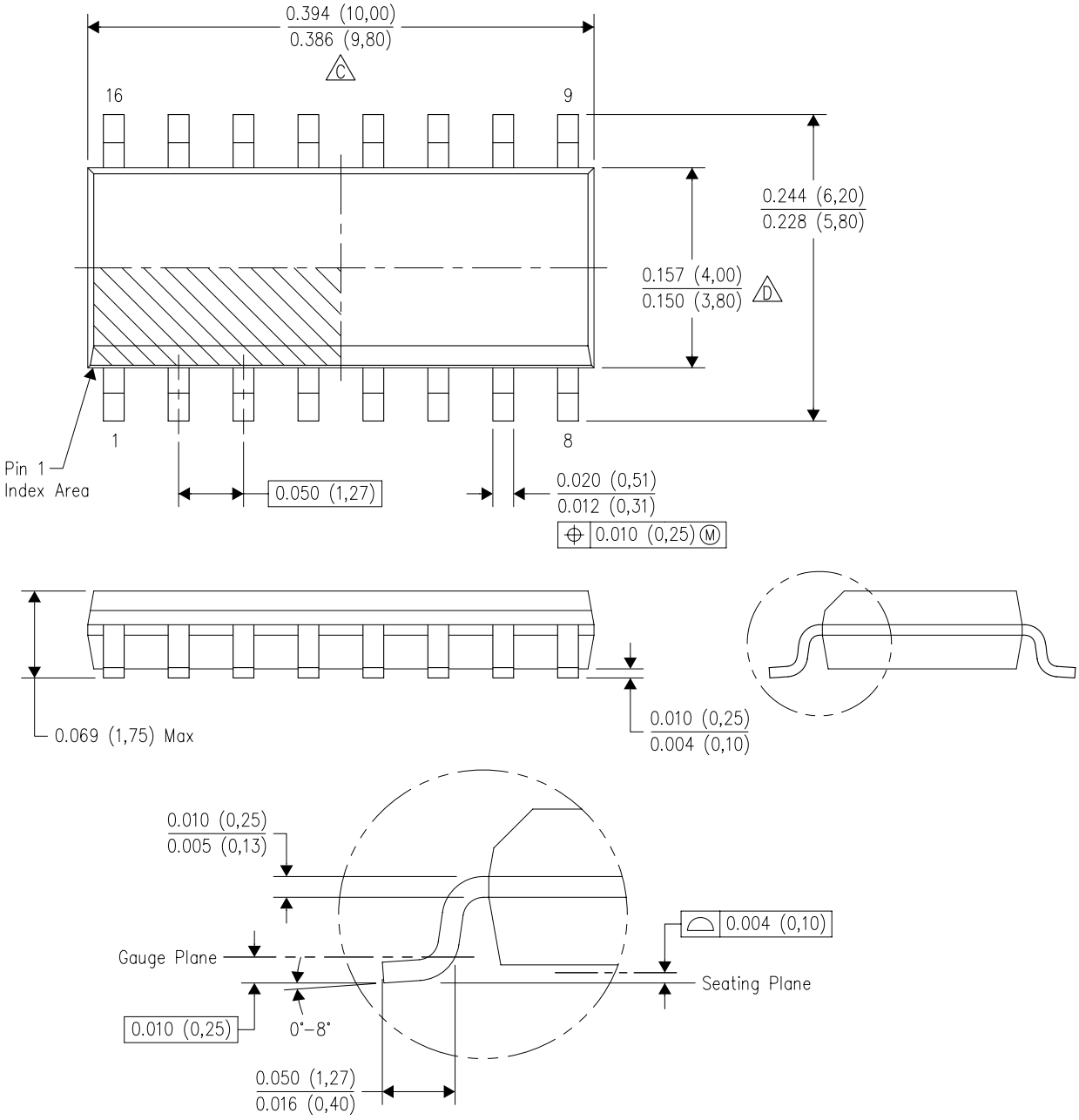

NOTES:
A. All linear dimensions are in inches (millimeters).
B. This drawing is subject to change without notice.
C. Body length does not include mold flash, protrusions, or gate burrs. Mold flash, protrusions, or gate burrs shall not exceed 0.006 (0,15) each side.
D. Body width does not include interlead flash. Interlead flash shall not exceed 0.017 (0,43) each side.
E. Reference JEDEC MS–012 variation AC.

D (R–PDSO–G16) PLASTIC SMALL OUTLINE

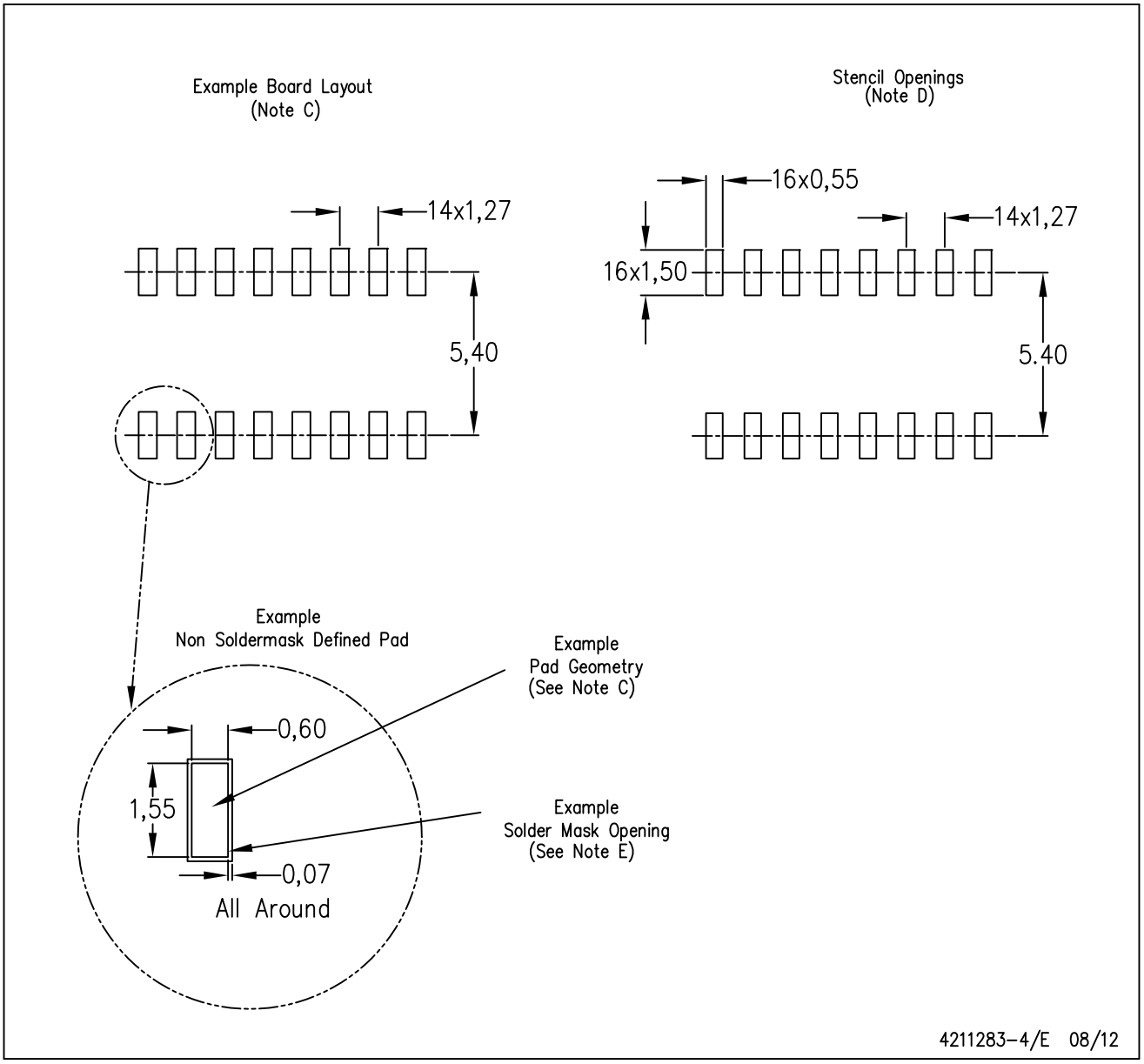

NOTES:
A. All linear dimensions are in millimeters.
B. This drawing is subject to change without notice.
C. Publication IPC–7351 is recommended for alternate designs.
D. Laser cutting apertures with trapezoidal walls and also rounding corners will offer better paste release. Customers should contact their board assembly site for stencil design recommendations. Refer to IPC–7525 for other stencil recommendations.
E. Customers should contact their board fabrication site for solder mask tolerances between and around signal pads.

PACKAGE OUTLINE

PW0016A

TSSOP - 1.2 mm max height

SMALL OUTLINE PACKAGE

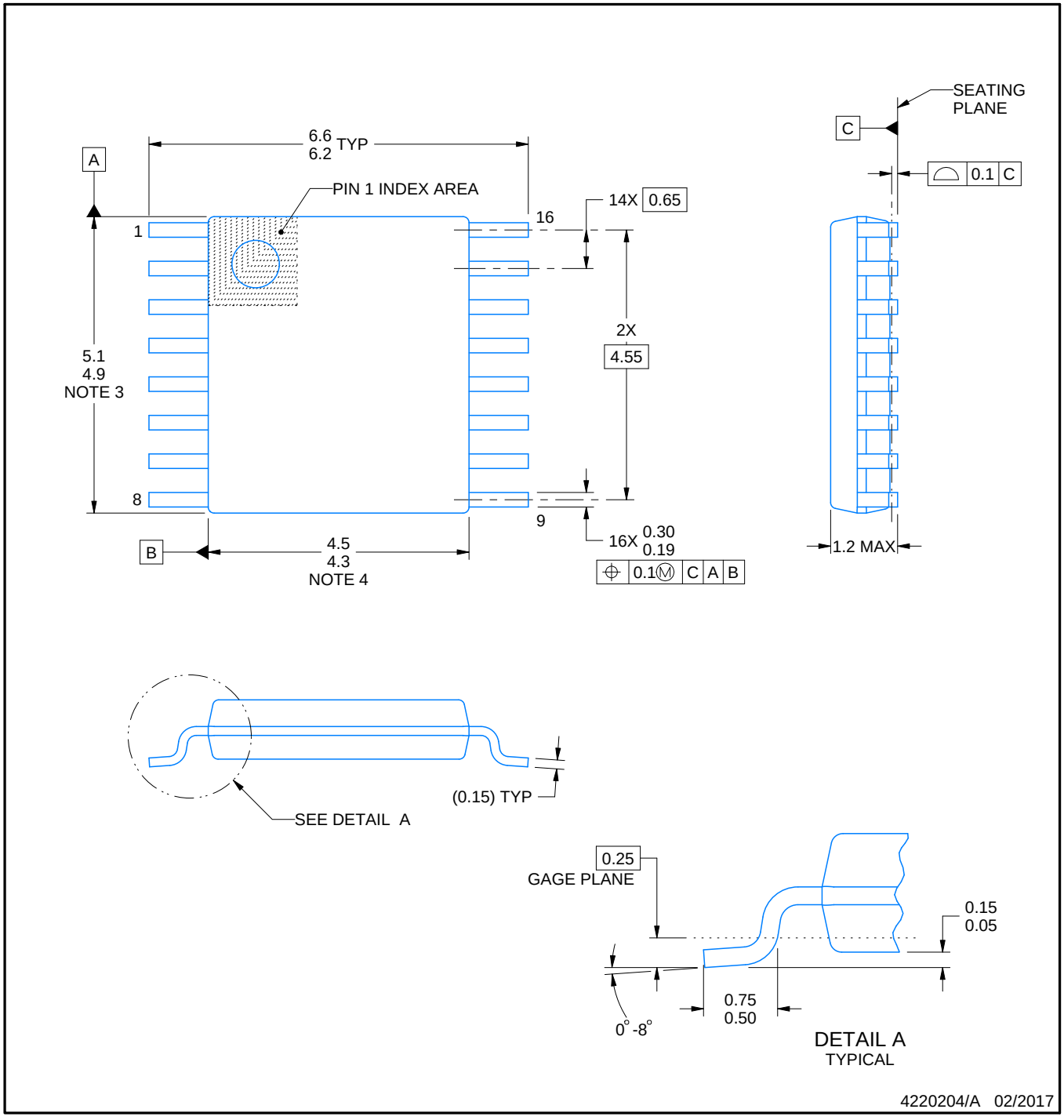

NOTES:

1. All linear dimensions are in millimeters. Any dimensions in parenthesis are for reference only. Dimensioning and tolerancing per ASME Y14.5M.
2. This drawing is subject to change without notice.
3. This dimension does not include mold flash, protrusions, or gate burrs. Mold flash, protrusions, or gate burrs shall not exceed 0.15 mm per side.
4. This dimension does not include interlead flash. Interlead flash shall not exceed 0.25 mm per side.
5. Reference JEDEC registration MO-153.

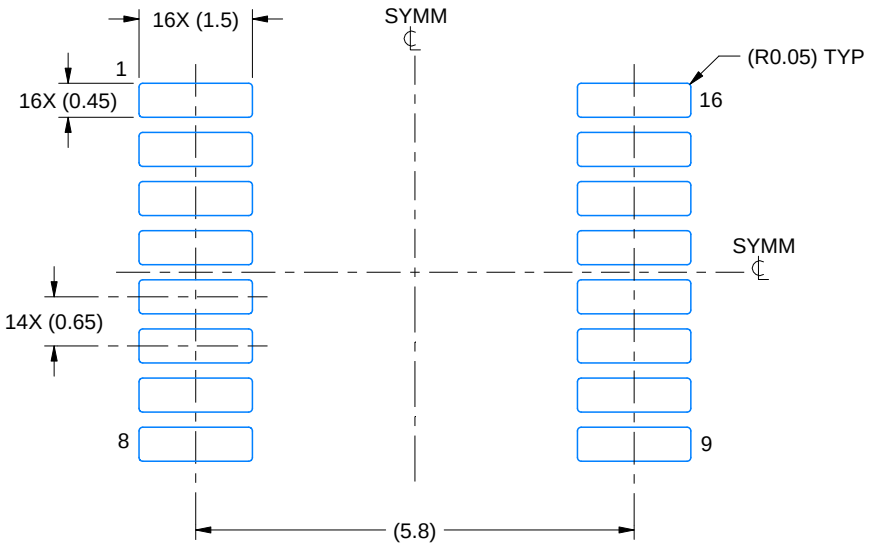

LAND PATTERN EXAMPLE
EXPOSED METAL SHOWN
SCALE: 10X

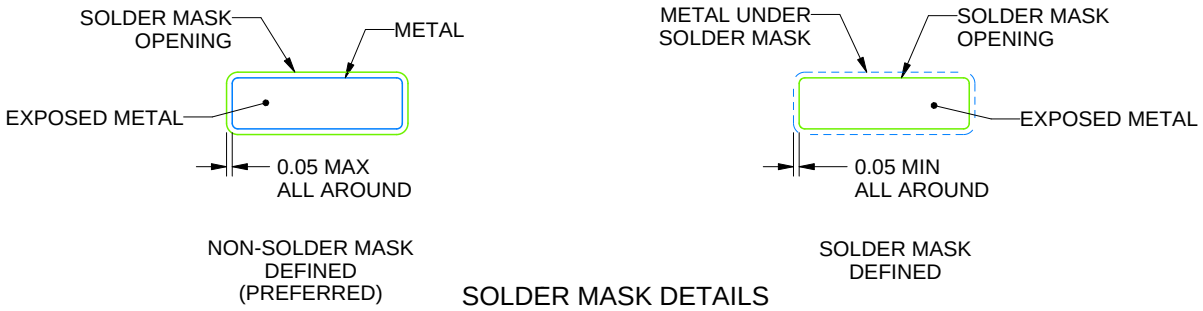

SOLDER MASK DETAILS

4220204/A 02/2017

NOTES: (continued)

6. Publication IPC-7351 may have alternate designs.
7. Solder mask tolerances between and around signal pads can vary based on board fabrication site.

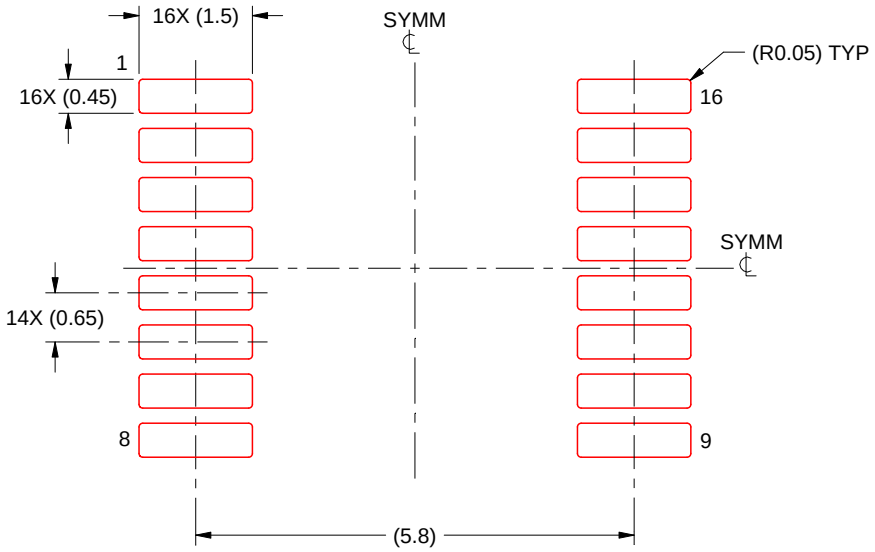

SOLDER PASTE EXAMPLE
BASED ON 0.125 mm THICK STENCIL
SCALE: 10X

4220204/A 02/2017

NOTES: (continued)

8. Laser cutting apertures with trapezoidal walls and rounded corners may offer better paste release. IPC-7525 may have alternate design recommendations.
9. Board assembly site may have different recommendations for stencil design.

IMPORTANT NOTICE AND DISCLAIMER

TI PROVIDES TECHNICAL AND RELIABILITY DATA (INCLUDING DATA SHEETS), DESIGN RESOURCES (INCLUDING REFERENCE DESIGNS), APPLICATION OR OTHER DESIGN ADVICE, WEB TOOLS, SAFETY INFORMATION, AND OTHER RESOURCES “AS IS” AND WITH ALL FAULTS, AND DISCLAIMS ALL WARRANTIES, EXPRESS AND IMPLIED, INCLUDING WITHOUT LIMITATION ANY IMPLIED WARRANTIES OF MERCHANTABILITY, FITNESS FOR A PARTICULAR PURPOSE OR NON-INFRINGEMENT OF THIRD PARTY INTELLECTUAL PROPERTY RIGHTS.

These resources are intended for skilled developers designing with TI products. You are solely responsible for (1) selecting the appropriate TI products for your application, (2) designing, validating and testing your application, and (3) ensuring your application meets applicable standards, and any other safety, security, regulatory or other requirements.

These resources are subject to change without notice. TI grants you permission to use these resources only for development of an application that uses the TI products described in the resource. Other reproduction and display of these resources is prohibited. No license is granted to any other TI intellectual property right or to any third party intellectual property right. TI disclaims responsibility for, and you will fully indemnify TI and its representatives against, any claims, damages, costs, losses, and liabilities arising out of your use of these resources.

TI’s products are provided subject to TI’s Terms of Sale or other applicable terms available either on ti.com or provided in conjunction with such TI products. TI’s provision of these resources does not expand or otherwise alter TI’s applicable warranties or warranty disclaimers for TI products.

TI objects to and rejects any additional or different terms you may have proposed.

Mailing Address: Texas Instruments, Post Office Box 655303, Dallas, Texas 75265
Copyright © 2024, Texas Instruments Incorporated

Looking for pricing, stock, or lifecycle information?

Click below to explore more details on WIN SOURCE:

- View TPIC6C595DRG4 on WIN SOURCE
- Texas Instruments Information

Optimize Your Supply Chain with WIN SOURCE Solutions

- Global Sourcing Solution
- Obsolete Management
- Cost Control Management
- Shortage Management
- Alternative Solution
- Excess Inventory Management