TPS65055 2.25-MHz Dual Step-Down Converter With 4 Low-Input Voltage LDOs

1 Features

- Up to 95% Efficiency
- Output Current for DCDC Converters 2 × 0.6 A
- Two Selectable Fixed Output Voltages 1 V and 1.2 V for DCDC2
- V_{IN} Range for DCDC Converters From 2.5 V to 6 V
- 2.25-MHz Fixed-Frequency Operation
- Power Save Mode at Light Load Current
- 180° Out-of-Phase Operation
- Output Voltage Accuracy in PWM Mode ±1%
- Low Ripple PFM Mode
- Total Typical 32-µA Quiescent Current for Both DC-DC Converters
- 100% Duty Cycle for Lowest Dropout
- 2 General-Purpose 400 mA High PSRR LDOs
- 2 General-Purpose 200 mA High PSRR LDOs
- V_{IN} Range for LDOs From 1.5 V to 6.5 V
- Digital Voltage Selection for the LDOs
- I^2C Compatible Interface
- Available in a 4 mm × 4 mm 32-Pin QFN Package

2 Applications

- Cell Phones, Smart Phones
- WLAN
- PDAs, Pocket PCs
- OMAP™ and Low Power DSP Supplies
- XScale
- Portable Media Players
- Digital Cameras

3 Description

The TPS65055 device is an integrated Power Management IC for applications powered by one Li-Ion or Li-Polymer cell, which require multiple power rails.

The TPS65055 provides two highly efficient, 2.25 MHz step-down converters targeted at providing the core voltage and I/O voltage in a processor-based system. Both step-down converters enter a low power mode at light load for maximum efficiency across the widest possible range of load currents.

For low noise applications the device can be forced into fixed frequency PWM mode using the I^2C compatible interface. In shutdown mode, current consumption is reduced to less than 1 µA.

The device allows the use of small inductors and capacitors to achieve a small solution size.

The TPS65055 provides an output current of up to 0.6 A on each DC-DC converter.

The TPS65055 also integrates two 400-mA LDO and two 200-mA LDO voltage regulators, which can be turned on/off using separate enable pins on each LDO. Each LDO operates with an input voltage range from 1.5 V to 6.5 V allowing them to be supplied from one of the step-down converters or directly from the main battery. Two digital input pins are used to set the output voltage of the LDOs from a set of 9 different combinations for LDO1 to LDO4. Additionally, the converters can be controlled by an I^2C compatible interface.

The TPS65055 is available in a small 32-pin leadless package (4 mm × 4 mm QFN) with a 0.4-mm pitch.

Device Information(1)

PART NUMBER	PACKAGE	BODY SIZE (NOM)
TPS65055	VQFN (32)	4.00 mm × 4.00 mm

(1) For all available packages, see the orderable addendum at the end of the data sheet.

Block Diagram

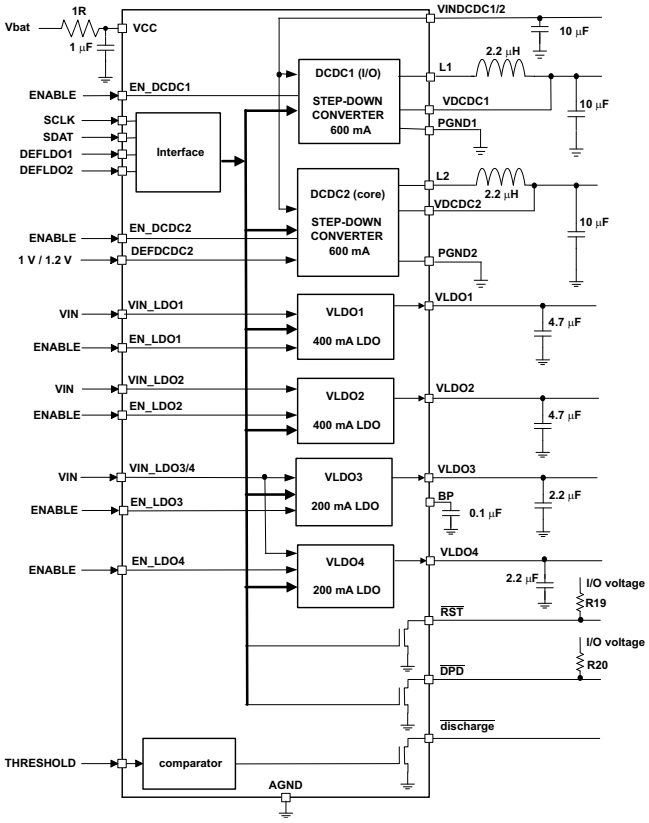

An IMPORTANT NOTICE at the end of this data sheet addresses availability, warranty, changes, use in safety-critical applications, intellectual property matters and other important disclaimers. PRODUCTION DATA.

Table of Contents

1 Features ... 1
2 Applications ... 1
3 Description ... 1
4 Revision History ... 2
5 Pin Configuration and Functions ... 3
6 Specifications ... 4
6.1 Absolute Maximum Ratings ... 4
6.2 ESD Ratings ... 4
6.3 Recommended Operating Conditions ... 5
6.4 Thermal Information ... 5
6.5 Electrical Characteristics ... 5
6.6 Dissipation Ratings ... 8
6.7 Typical Characteristics ... 8
7 Parameter Measurement Information ... 11
8 Detailed Description ... 12
8.1 Overview ... 12
8.2 Functional Block Diagram ... 13
8.3 Feature Description ... 14
8.4 Device Functional Modes ... 17
8.5 Programming ... 17
8.6 Register Maps ... 20
9 Application and Implementation ... 30
9.1 Application Information ... 30
9.2 Typical Application ... 31
10 Power Supply Recommendations ... 35
11 Layout ... 35
11.1 Layout Guidelines ... 35
11.2 Layout Example ... 36
12 Device and Documentation Support ... 37
12.1 Device Support ... 37
12.2 Community Resources ... 37
12.3 Trademarks ... 37
12.4 Electrostatic Discharge Caution ... 37
12.5 Glossary ... 37
13 Mechanical, Packaging, and Orderable Information ... 37

4 Revision History

NOTE: Page numbers for previous revisions may differ from page numbers in the current version.

Changes from Original (September 2008) to Revision A	Page
• Added *ESD Ratings* table, *Feature Description* section, *Device Functional Modes*, *Application and Implementation* section, *Power Supply Recommendations* section, *Layout* section, *Device and Documentation Support* section, and *Mechanical, Packaging, and Orderable Information* section	1

Copyright © 2008–2015, Texas Instruments Incorporated

5 Pin Configuration and Functions

RSM Package
32-Pin VQFN
Top View

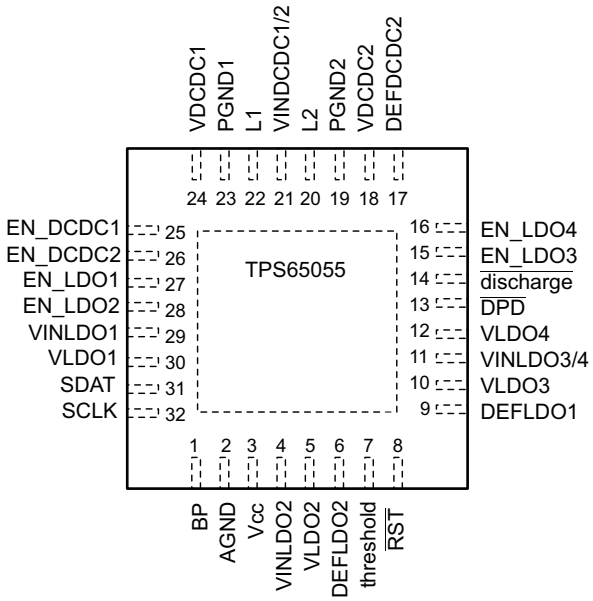

Pin Functions

PIN		I/O	DESCRIPTION
NAME	NO.		
AGND	2	I	Analog GND, connect to PGND and PowerPAD
BP	1	I	Input for bypass capacitor for internal reference
DEF_DCDC2	17	I	Select pin of converter 2 output voltage. High = 1 V, low = 1.2 V
DEFLDO1	9	I	Digital input, used to set the default output voltage of LDO1 to LDO4; LSB
DEFLDO2	6	I	Digital input, used to set the default output voltage of LDO1 to LDO4; MSB
$\overline{\text{discharge}}$	14	O	Open-drain output driven by the signal at the threshold input
$\overline{\text{DPD}}$	13	O	Open-drain active low output; low after UVLO event
EN_DCDC1	25	I	Enable input for converter1, active high
EN_DCDC2	26	I	Enable input for converter2, active high
EN_LDO1	27	I	Enable input for LDO1. Logic high enables the LDO, logic low disables the LDO.
EN_LDO2	28	I	Enable input for LDO2. Logic high enables the LDO, logic low disables the LDO.
EN_LDO3	15	I	Enable input for LDO3. Logic high enables the LDO, logic low disables the LDO.
EN_LDO4	16	I	Enable input for LDO4. Logic high enables the LDO, logic low disables the LDO.
L1	22	O	Switch pin of converter1. Connected to inductor
L2	20	O	Switch pin of converter 2. Connected to inductor.
PGND1	23	I	GND for converter 1
PGND2	19	I	GND for converter 2
$\overline{\text{RST}}$	8	O	Open-drain active low output; low after UVLO event
SCLK	32	I	Clock input for the I^2C compatible interface.
SDAT	31	I/O	Data line for the I^2C compatible interface.
threshold	7	I	Input to comparator driving the $\overline{\text{discharge}}$ output. If the input voltage at threshold is < 0.8 V, the $\overline{\text{discharge}}$ output is actively pulled low.
Vcc	3	I	Power supply for digital and analog circuitry of DCDC1, DCDC2 and LDOs. This pin must be connected to the same voltage supply as VINDCDC1/2.

Copyright © 2008–2015, Texas Instruments Incorporated

Pin Functions (continued)

PIN		I/O	DESCRIPTION
NAME	NO.		
VDCDC1	24	I	Feedback voltage sense input, connect directly to Vout1
VDCDC2	18	I	Feedback voltage sense input, connect directly to Vout2
VINDCDC1/2	21		Input voltage for VDCDC1 and VDCDC2 step-down converter. This must be connected to the same voltage supply as VCC.
VINLDO1	29	I	Input voltage for LDO1
VINLDO2	4	I	Input voltage for LDO2
VINLDO3/4	11	I	Input voltage for LDO3 and LDO4
VLDO1	30	O	Output voltage of LDO1
VLDO2	5	O	Output voltage of LDO2
VLDO3	10	O	Output voltage of LDO3
VLDO4	12	O	Output voltage of LDO4
PowerPAD™	–		Connect to GND

6 Specifications

6.1 Absolute Maximum Ratings

over operating free-air temperature range (unless otherwise noted) (1)

		MIN	MAX	UNIT
	Input voltage range on all pins except A/PGND, EN_LDO1 pins with respect to AGND	–0.3	7	V
	Input voltage range on EN_LDO1 pins with respect to AGND	–0.3	V_{CC}+0.5	V
	Output voltage range on LDO1, LDO2, LDO3, LDO4 pins with respect to AGND	–0.3	4	V
	Current at VINDCDC1/2, L1, PGND1, L2, PGND2		1800	mA
	Current at all other pins		1000	mA
	Continuous total power dissipation	See *Dissipation Ratings*		
T_A	Operating free-air temperature	–40	85	°C
T_J	Maximum junction temperature		125	°C
	Lead temperature 1,6 mm (1/16-inch) from case for 10 seconds		260	°C
T_{st}	Storage temperature	–65	150	°C

(1) Stresses beyond those listed under *Absolute Maximum Ratings* may cause permanent damage to the device. These are stress ratings only and functional operation of the device at these or any other conditions beyond those indicated under *Recommended Operating Conditions* is not implied. Exposure to absolute-maximum-rated conditions for extended periods may affect device reliability. This device contains circuits to protect its inputs and outputs against damage due to high static voltages or electrostatic fields. These circuits have been qualified to protect this device against electrostatic discharges; HBM according to EIA/JESD22-A114-B: 1.5 kV; and CDM according EIA/JESD22C101C: 500 V, however, it is advised that precautions should be taken to avoid application of any voltage higher than maximum-rated voltages to these high-impedance circuits. During storage or handling, the device leads should be shorted together or the device should be placed in conductive foam. In a circuit, unused inputs should always be connected to an appropriated logic voltage level, preferably either VCC or ground. Specific guidelines for handling devices of this type are contained in the publication Guidelines for Handling Electrostatic-Discharge-Sensitive (ESDS) Devices and Assemblies available from Texas Instruments.

6.2 ESD Ratings

			VALUE	UNIT
$V_{(ESD)}$	Electrostatic discharge	Human body model (HBM), per ANSI/ESDA/JEDEC JS-001 (1)	±2000	V
		Charged device model (CDM), per JEDEC specification JESD22-C101 (2)	±1000	

(1) JEDEC document JEP155 states that 500-V HBM allows safe manufacturing with a standard ESD control process.
(2) JEDEC document JEP157 states that 250-V CDM allows safe manufacturing with a standard ESD control process.

Copyright © 2008–2015, Texas Instruments Incorporated

6.3 Recommended Operating Conditions

over operating free-air temperature range (unless otherwise noted)

		MIN	NOM	MAX	UNIT
$V_{INDCDC1/2}$	Input voltage range for step-down converters	2.5	4	6	V
V_{DCDC1}	Output voltage range for VDCDC1 step-down converter	0.6		$V_{INDCDC1}$	V
V_{DCDC2}	Output voltage range for VDCDC2 step-down converter	0.6		$V_{INDCDC2}$	V
V_{INLDO1}, V_{INLDO2}, $V_{INLDO3/4}$	Input voltage range for LDOs	1.5		6.5	V
V_{LDO1-3}	Output voltage range for LDO1 and LDO3	0.8		2.8	V
V_{LDO2-4}	Output voltage range for LDO2 and LDO4	1		3	V
$I_{OUTDCDC1}$	Output current at L1			600	mA
L1	Inductor at L1 (1)	1.5	2.2		µH
$C_{INDCDC1/2}$	Input capacitor at VINDCDC1/2 (1)	22			µF
$C_{OUTDCDC1}$	Output capacitor at VDCDC1 (1)	10	22		µF
$I_{OUTDCDC2}$	Output current at L2			600	mA
L2	Inductor at L2 (1)	1.5	2.2		µH
$C_{OUTDCDC2}$	Output capacitor at VDCDC2 (1)	10	22		µF
C_{VCC}	Input capacitor at VCC (1)	1			µF
C_{in1-2}	Input capacitor at VINLDO1/2 (1)	2.2			µF
C_{in3-4}	Input capacitor at VINLDO3/4 (1)	2.2			µF
C_{OUT1-2}	Output capacitor at VLDO1-4 (1)	2.2			µF
$I_{LDO1,2}$	Output current at VLDO1,2			400	mA
$I_{LDO3,4}$	Output current at VLDO3,4			200	mA
T_A	Operating ambient temperature	–40		85	°C
T_J	Operating junction temperature	–40		125	°C
R_{CC}	Resistor from battery voltage to V_{cc} used for filtering (2)		1	10	Ω

(1) See *Application and Implementation* for more details.
(2) Up to 2 mA can flow into V_{cc} when both converters are running in PWM, this resistor causes the UVLO threshold to be shifted accordingly.

6.4 Thermal Information

THERMAL METRIC (1)		TPS65055 RSM [VQFN] 32 PINS	UNIT
$R_{\theta JA}$	Junction-to-ambient thermal resistance	37.2	°C/W
$R_{\theta JC(top)}$	Junction-to-case (top) thermal resistance	30.1	°C/W
$R_{\theta JB}$	Junction-to-board thermal resistance	7.8	°C/W
ψ_{JT}	Junction-to-top characterization parameter	0.4	°C/W
ψ_{JB}	Junction-to-board characterization parameter	7.6	°C/W
$R_{\theta JC(bot)}$	Junction-to-case (bottom) thermal resistance	2.4	°C/W

(1) For more information about traditional and new thermal metrics, see the *Semiconductor and IC Package Thermal Metrics* application report, SPRA953.

6.5 Electrical Characteristics

V_{IN} = 3.6 V, EN = V_{IN}, MODE = GND, L = 2.2 µH, C_{OUT} = 22 µF, T_A = –40°C to 85°C, Typical values are at T_A = 25°C (unless otherwise noted)

PARAMETER		TEST CONDITIONS	MIN	TYP	MAX	UNIT
SUPPLY CURRENT						
V_{cc}	Input voltage range		2.5		6	V

Electrical Characteristics (continued)

V_{IN} = 3.6 V, EN = V_{IN}, MODE = GND, L = 2.2 µH, C_{OUT} = 22 µF, T_A = –40°C to 85°C, Typical values are at T_A = 25°C (unless otherwise noted)

PARAMETER			TEST CONDITIONS	MIN	TYP	MAX	UNIT
I_Q	Operating quiescent current Total current into V_{CC}, VINDCDC1/2, VINLDO1, VINLDO2, VINLDO3/4		One converter, I_{OUT} = 0 mA. PFM mode enabled; device not switching, EN_DCDC1 = V_{IN} or EN_DCDC2 = V_{IN}; EN_LDO1 = EN_LDO2 = EN_LDO3/4 = GND		30	40	µA
			Two converters, I_{OUT} = 0 mA, PFM mode device not switching, EN_DCDC1 = V_{IN} and EN_DCDC2 = V_{IN}; EN_LDO1 = EN_LDO2 = EN_LDO3/4 = GND		40	55	µA
			One converter, I_{OUT} = 0 mA, PFM mode enabled; device not switching, EN_DCDC1 = V_{IN} or EN_DCDC2 = V_{IN}; EN_LDO1 = EN_LDO2 = EN_LDO3 = EN_LDO4 = V_{IN}		190	260	µA
I_Q	Operating quiescent current into V_{CC}		One converter, I_{OUT} = 0 mA, Switching with no load, PWM operation EN_DCDC1 = V_{IN} or EN_DCDC2 = V_{IN}; EN_LDO1 = EN_LDO2 = EN_LDO3/4 = GND		0.85		mA
			Two converters, I_{OUT} = 0 mA, Switching with no load, PWM operation EN_DCDC1 = V_{IN} AND EN_DCDC2 = V_{IN}; EN_LDO1 = EN_LDO2 = EN_LDO3/4 = GND		1.25		mA
$I_{(SD)}$	Shutdown current		EN_DCDC1 = EN_DCDC2 = GND EN_LDO1 = EN_LDO2 = EN_LDO3 = EN_LDO4 = GND		18	22	µA
$V_{(UVLO)}$	Undervoltage lockout threshold for DCDC converters and LDOs		Voltage at V_{CC}		1.8	2	V
EN_DCDC1, EN_DCDC2, DEFDCDC2, DEFLDO1, DEFLDO2, EN_LDO1, EN_LDO2, EN_LDO3, EN_LDO4							
V_{IH}	High-level input voltage, SDAT, SCLK, EN_DCDC1, EN_DCDC2, DEFDCDC2, EN_LDO1, EN_LDO2, EN_LDO3, EN_LDO4			1.2		V_{CC}	V
V_{IL}	Low-level input voltage SDAT, SCLK, EN_DCDC1, EN_DCDC2, EN_LDO1, EN_LDO2, EN_LDO3, EN_LDO4, DEFDCDC2			0		0.4	V
I_{IN}	Input bias current SDAT, SCLK, EN_DCDC1, EN_DCDC2, DEFDCDC2, DEFLDO1, DEFLDO2, EN_LDO1, EN_LDO2, EN_LDO3, EN_LDO4				0.01	1	µA
V_{IH}	DEFLDO1, DEFLDO2		V_{CC} = 2.5 V	1.0			V
V_{IL}	DEFLDO1, DEFLDO2		V_{CC} = 6.5 V			0.38	V
RPD	Pulldown resistor at DEFLDO1, DEFLDO2 for LOW signal		Pulled to GND			1	kΩ
RPU	Pullup resistor at DEFLDO1, DEFLDO2 for HIGH signal		Pulled to V_{CC}			1	kΩ
RGNDopen	Resistance at DEFLDO1, DEFLDO2 to GND to detect *open state*			10			MΩ
RVCCopen	Resistance at DEFLDO1, DEFLDO2 to Vcc to detect *open state*			20			MΩ
POWER SWITCH							
$r_{DS(on)}$	P-channel MOSFET on resistance	DCDC1, DCDC2	VINDCDC1/2 = 3.6 V		280	630	mΩ
			VINDCDC1/2 = 2.5 V		400		
I_{LD_PMOS}	P-channel leakage current		V_{DS} = 6 V			1	µA
$r_{DS(on)}$	N-channel MOSFET on resistance	DCDC1, DCDC2	VINDCDC1/2 = 3.6 V		220	450	mΩ
			VINDCDC1/2 = 2.5 V		320		
I_{LK_NMOS}	N-channel leakage current		V_{DS} = 6 V		7	10	µA
$I_{(LIMF)}$	Forward current limit PMOS (high-side) and NMOS (low side)	DCDC1	2.5 V ≤ V_{IN} ≤ 6 V	0.85	1.0	1.15	A
		DCDC2		0.85	1.0	1.15	
T_{SD}	Thermal shutdown		Increasing junction temperature		150		°C
	Thermal shutdown hysteresis		Decreasing junction temperature		20		°C
OSCILLATOR							
f_{SW}	Oscillator frequency			2.025	2.25	2.475	MHz

Copyright © 2008–2015, Texas Instruments Incorporated

Electrical Characteristics (continued)

V_{IN} = 3.6 V, EN = V_{IN}, MODE = GND, L = 2.2 µH, C_{OUT} = 22 µF, T_A = –40°C to 85°C, Typical values are at T_A = 25°C (unless otherwise noted)

PARAMETER			TEST CONDITIONS	MIN	TYP	MAX	UNIT
OUTPUT							
V_{OUT}	Output voltage range			0.8		V_{IN}	V
V_{OUT}	DC output voltage accuracy	DCDC1, DCDC2(1)	V_{IN} = 2.5 V to 6 V, Mode = GND, PFM operation, 0 mA < I_{OUT} < I_{OUTMAX}	–1.5 %	0%	3.5%	
			V_{IN} = 2.5 V to 6 V, Mode = V_{IN}, PWM operation, 0 mA < I_{OUT} < I_{OUTMAX}	–1.5 %	0%	1.5%	
ΔV_{OUT}	Power save mode ripple voltage(2)		I_{OUT} = 1 mA, PFM = GND, Bandwidth = 20 MHz		25		mV_{PP}
t_{Start}	Start-up time		Time from active EN to start switching		170		µs
t_{Ramp}	V_{OUT} Ramp up time		Time to ramp from 5% to 95% of V_{OUT}		750		µs
R_{DIS}	Internal discharge resistor at L1, L2				350		Ω
V_{OL}	$\overline{RST}$, $\overline{DPD}$, $\overline{discharge}$ output low voltage		I_{OL} = 1 mA, $V_{threshold}$ < 0.8 V			0.3	V
I_{OL}	$\overline{RST}$, $\overline{DPD}$ sink current			1			mA
	$\overline{discharge}$ sink current			10			mA
	$\overline{RST}$, $\overline{DPD}$, $\overline{discharge}$ output leakage current		$V_{threshold}$ > 0.8 V, $\overline{RST}$ and $\overline{DPD}$ outputs turned off (internal NMOS in high impedance state)		0.01	1	µA
V_{th}	$V_{threshold}$ voltage		Voltage rising	0.78	0.8	0.82	V
	Hysteresis on threshold		Voltage decreasing		80		mV
VLDO1, VLDO2, VLDO3 and VLDO4 LOW DROPOUT REGULATORS							
V_{INLDO}	Input voltage range for LDO1, LDO2, LDO3, LDO4			1.5		6.5	V
V_{LDO1}	LDO1 output voltage range			0.8		2.8	V
V_{LDO2}	LDO2 output voltage range			1.2		3	V
V_{LDO3}	LDO3 output voltage			0.8		2.8	V
V_{LDO4}	LDO4 output voltage range			1.2		3	V
I_O	Maximum output current for LDO1,LDO2			400			mA
	Maximum output current for LDO3, LDO4			200			
$I_{(SC)}$	LDO1 and LDO2 short-circuit current limit		V_{LDO1} = GND, V_{LDO2} = GND			800	mA
	LDO3 and LDO4 short-circuit current limit		V_{LDO3} = GND, V_{LDO4} = GND			400	mA
	Dropout voltage at LDO1		I_O = 250 mA, V_{INLDO} = 1.8 V			600	mV
	Dropout voltage at LDO2		I_O = 400 mA, V_{INLDO} = 3.3 V			450	mV
	Dropout voltage at LDO3, LDO4		I_O = 200 mA, V_{INLDO} = 1.8 V			280	mV
	Output voltage accuracy for LDO1, LDO2, LDO3		I_O = 10 mA	–2%		1%	
	Leakage current from V_{INLDOx} to V_{LDOx}		LDO enabled, V_{INLDOx} = 6.5 V; V_O = 1.0 V, T = 140°C		3		µA
	Output voltage accuracy for LDO1, LDO2, LDO3, LDO4		I_O = 10 mA	–2%		1%	
	Line regulation for LDO1, LDO2, LDO3, LDO4		$V_{INLDO1,2}$ = $V_{LDO1,2}$ + 0.5 V (minimum 2.5 V) to 6.5 V, $V_{INLDO3,4}$ = $V_{LDO3,4}$ + 0.5 V (minimum 2.5 V) to 6.5 V, I_O = 10 mA	–1%		1%	
	Load regulation for LDO1, LDO2, LDO3, LDO4		I_O = 0mA to 400 mA for LDO1, LDO2 I_O = 0mA to 200 mA for LDO3, LDO4	–1%		1%	
	Regulation time for LDO1, LDO2, LDO3, LDO4		Load change from 10% to 90%		10		µs
PSRR	Power supply rejection ratio		f = 10 kHz; I_O = 50 mA; V_I = V_O + 1 V		70		dB
R_{DIS}	Internal discharge resistor at VLDO1, VLDO2, VLDO3, VLDO4				350		Ω
T_{SD}	Thermal shutdown		Increasing junction temperature		140		°C
	Thermal shutdown hysteresis		Decreasing junction temperature		20		°C

(1) Output voltage specification does not include tolerance of external voltage programming resistors.
(2) In power save mode, PWM operation is typically entered at IPSM = VIN/32 Ω.

Copyright © 2008–2015, Texas Instruments Incorporated

6.6 Dissipation Ratings

PACKAGE	$R_{\theta JA}$	$T_A \leq 25°C$ POWER RATING	DERATING FACTOR ABOVE $T_A = 25°C$	$T_A = 70°C$ POWER RATING	$T_A = 85°C$ POWER RATING
RSM(1)	58 K/W	1.7 W	17 mW/K	0.95 W	0.68 W

(1) The thermal resistance junction-to-case of the RSM package is 4 K/W measured on a high K board.

6.7 Typical Characteristics

Table 1. Table Of Graphs

			FIGURE
η	Efficiency DCDC1 (V_O = 2.1 V)	vs Load current / PWM mode	Figure 1
η	Efficiency DCDC1 (V_O = 2.1 V)	vs Load current / PFM mode	Figure 2
η	Efficiency DCDC2 (V_O = 1.575 V)	vs Load current / PWM mode	Figure 3
η	Efficiency DCDC2 (V_O = 1.575 V)	vs Load current / PFM mode	Figure 4
η	Efficiency DCDC2 (V_O = 1.2 V)	vs Load current / PWM mode	Figure 5
η	Efficiency DCDC2 (V_O = 1.2 V)	vs Load current / PFM mode	Figure 6
	Output voltage ripple in PFM mode	Scope plot	Figure 7
	Output voltage ripple in PWM mode	Scope plot	Figure 8
	Startup timing DCDC1, DCDC2, LDO1	Scope plot	Figure 9
	Startup timing LDO1, LDO2, LDO3, LDO4	Scope plot	Figure 10
	Load transient response DCDC1; PWM	Scope plot	Figure 11
	Load transient response DCDC1; PFM	Scope plot	Figure 12
	Load transient response DCDC2; PWM	Scope plot	Figure 13
	Load transient response DCDC2;PFM	Scope plot	Figure 14
	Line transient response DCDC1 (V_O = 2.1 V)	Scope plot	Figure 15
	Line transient response DCDC2 (V_O = 1.2 V)	Scope plot	Figure 16
	Load transient response LDO1	Scope plot	Figure 17
	Load transient response LDO4	Scope plot	Figure 18
	Line transient response LDO1	Scope plot	Figure 19

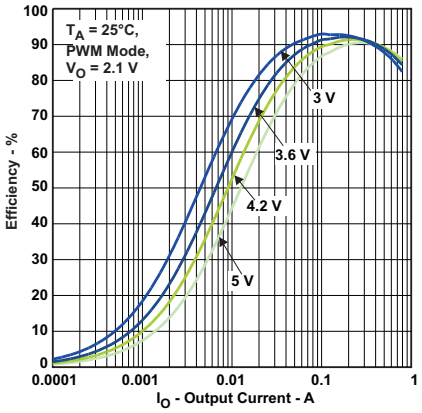

Figure 1. Efficiency DCDC1 (VO = 2.1 V) vs Load Current / PWM Mode

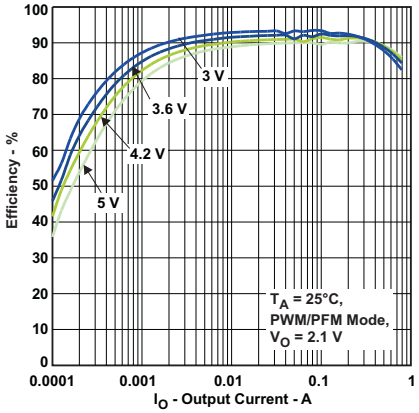

Figure 2. Efficiency DCDC1 (VO = 2.1 V) vs Load Current / PFM Mode

Copyright © 2008–2015, Texas Instruments Incorporated

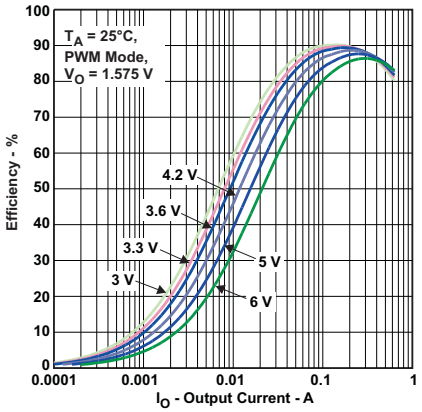

Figure 3. Efficiency DCDC2 (VO = 1.575 V) vs Load Current / PWM Mode

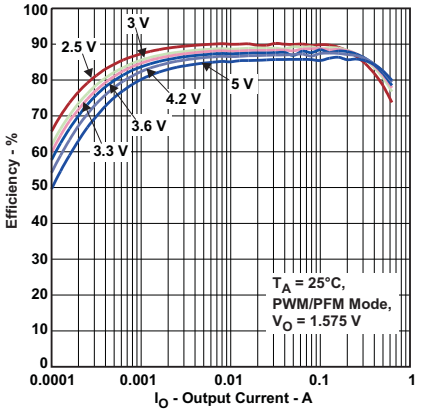

Figure 4. Efficiency DCDC2 (VO = 1.575 V) vs Load Current / PFM Mode

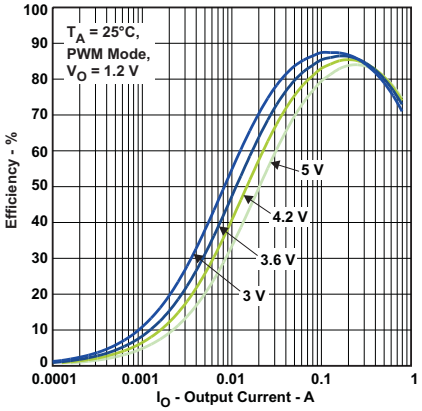

Figure 5. Efficiency DCDC2 (VO = 1.2 V) vs Load Current / PWM Mode

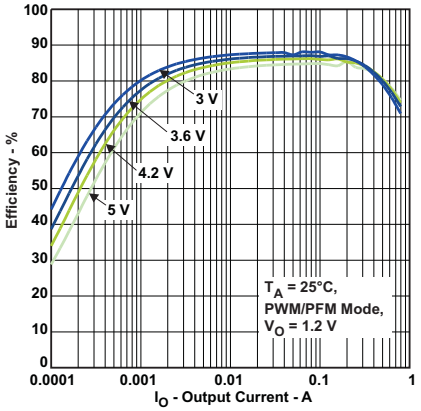

Figure 6. Efficiency DCDC2 (VO = 1.2 V) vs Load Current / PFM Mode

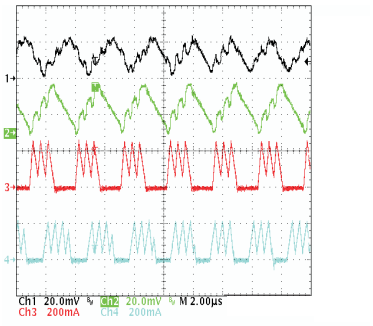

TEST CONDITIONS

V_{IN} = 3.6 V
T_A = 25°C
VDCD1 = 2.1 V
VDCD2 = 1.2 V

Load DCDC1 = 80 mA
Load DCDC2 = 80 mA

ENDCDC1 = High
ENDCDC2 = High
ENLDO1 = Low
ENLDO2 = Low
ENLDO3 = Low
ENLDO4 = Low

CH1: VDCD1 (Black)
CH2: VDCD2 (Green)
CH3: Inductor Current DCDC2 (Red)
CH4: Inductor Current DCDC1 (Blue)

Figure 7. Output Voltage Ripple in PFM Mode

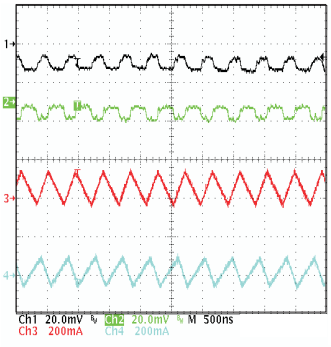

TEST CONDITIONS

V_{IN} = 3.6 V
T_A = 25°C
VDCD1 = 2.1 V
VDCD2 = 1.2 V

Load DCDC1 = 600 mA
Load DCDC2 = 600 mA

ENDCDC1 = High
ENDCDC2 = High
ENLDO1 = Low
ENLDO2 = Low
ENLDO3 = Low
ENLDO4 = Low

CH1: VDCD1 (Black)
CH2: VDCD2 (Green)
CH3: Inductor Current DCDC2 (Red)
CH4: Inductor Current DCDC1 (Blue)

Figure 8. Output Voltage Ripple in PWM Mode

Copyright © 2008–2015, Texas Instruments Incorporated

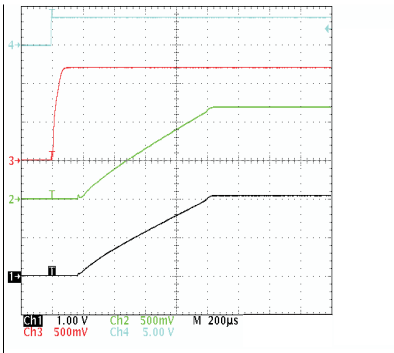

TEST CONDITIONS

V_{IN} = 3.6 V
T_A = 25°C
VDCD1 = 2.1 V
VDCD2 = 1.2 V

Load DCDC1 = 600 mA
Load DCDC2 = 600 mA

ENDCDC1 = 0 V to 3.6 V
ENDCDC2 = 0 V to 3.6 V
ENLDO1 = 0 V to 3.6 V
ENLDO2 = Low
ENLDO3 = Low
ENLDO4 = Low

CH4: EN_DCDC1/2, ENLDO1 (Blue)
CH3: VLDO1 (Red)
CH2: VDCDC2 (Green)
CH1: VDCDC1 (Black)

Figure 9. Startup Timing DCDC1, DCDC2, and LDO1

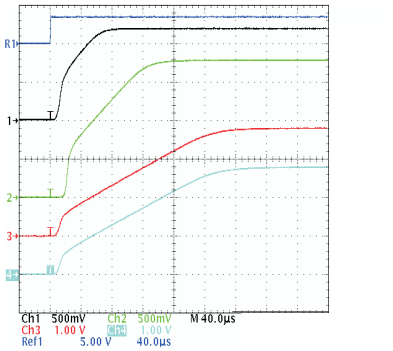

TEST CONDITIONS

V_{IN} = 3.6 V
T_A = 25°C
VLDO1 = 3.3 V
VLDO2 = 2.85 V
VLDO3 = 1.1 V
VLDO3 = 1.3 V

Load Current = 100 mA each

ENLDO1 = 0 V to 3.6 V
ENLDO2 = 0 V to 3.6 V
ENLDO3 = 0 V to 3.6 V
ENLDO4 = 0 V to 3.6 V

R1: Enable (Blue)
CH1: VDCD1 (Black)
CH2: VDCD2 (Green)
CH3: VLDO3 (Red)
CH4: VLDO4 (Turquoise)

Figure 10. Startup Timing LDO1, LDO2, LDO3, and LDO4

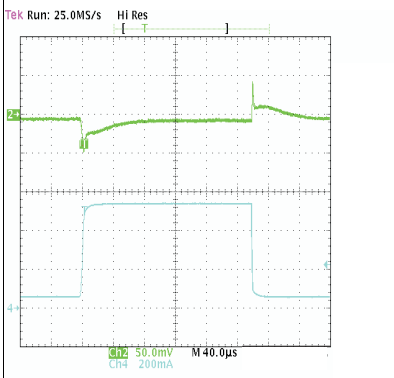

TEST CONDITIONS

V_{IN} = 3.6 V
T_A = 25°C

Load Current = 60 mA to 540 mA
VDCDC1 = 2.1 V

CH1: VDCD1 (Green)
CH2: Load Current (Blue)

Figure 11. Load Transient Response DCDC1; PWM

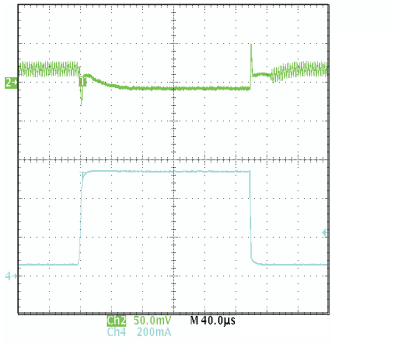

TEST CONDITIONS

V_{IN} = 3.6 V
T_A = 25°C

Load Current = 60 mA to 540 mA
VDCDC1 = 2.1 V

CH1: VDCD1 (Green)
CH2: Load Current (Blue)

Figure 12. Load Transient Response DCDC1; PFM

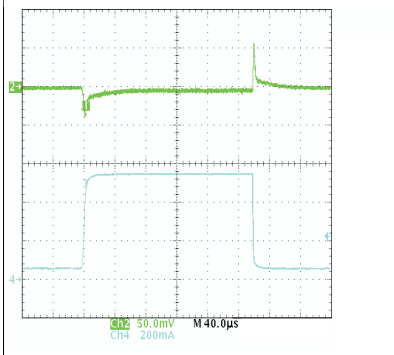

TEST CONDITIONS

V_{IN} = 3.6 V
T_A = 25°C

Load Current = 60 mA to 540 mA
VDCDC1 = 2.1 V

CH1: VDCD1 (Green)
CH2: Load Current (Blue)

Figure 13. Load Transient Response DCDC2; PWM

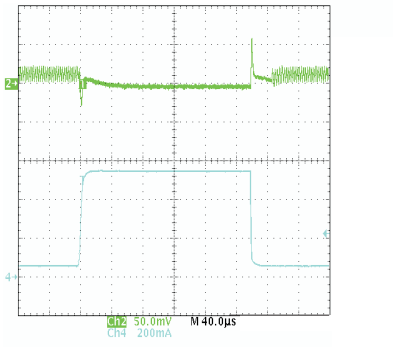

TEST CONDITIONS

V_{IN} = 3.6 V
T_A = 25°C

Load Current = 60 mA to 540 mA
VDCDC1 = 2.1 V

CH1: VDCD1 (Green)
CH2: Load Current (Blue)

Figure 14. Load Transient Response DCDC2; PFM

Copyright © 2008–2015, Texas Instruments Incorporated

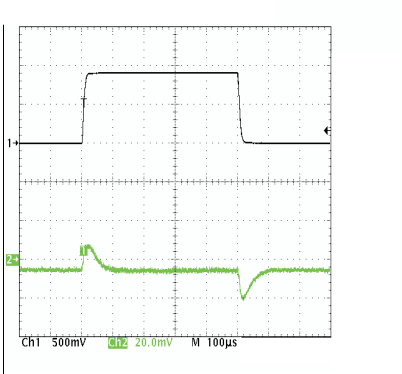

TEST CONDITIONS

V_{IN} = 3.6 V
T_A = 25°C

Load Current = 600 mA
VDCDC2 = 2.1 V

CH1: Input Voltage (Black)
CH2: Output Voltage (Green)

Figure 15. Line Transient Response DCDC1 (V_O = 2.1 V)

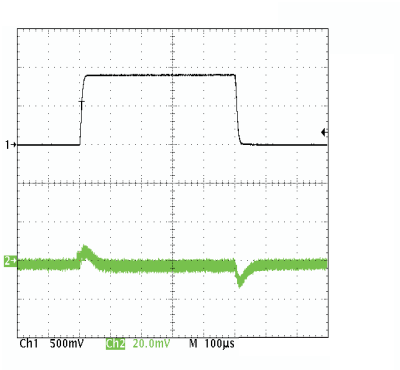

TEST CONDITIONS

V_{IN} = 3.3 V to 4.2 V to 3.3 V
T_A = 25°C

Load Current = 600 mA
VDCDC2 = 2.1 V

CH1: Input Voltage (Black)
CH2: Output Voltage (Green)

Figure 16. Line Transient Response DCDC2 (V_O = 1.2 V)

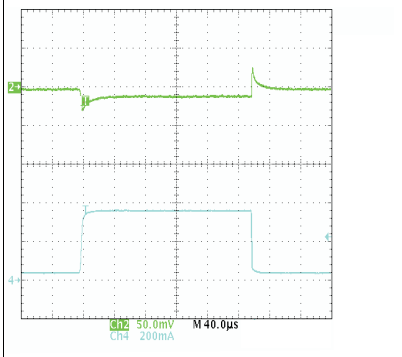

TEST CONDITIONS

V_{IN} = 3.6 V
T_A = 25°C

Load Current = 40 mA to 360 mA
VLDO1 = 1.2 V

CH1: VLDO1 (Green)
CH2: Load Current (Blue)

Figure 17. Load Transient Response LDO1

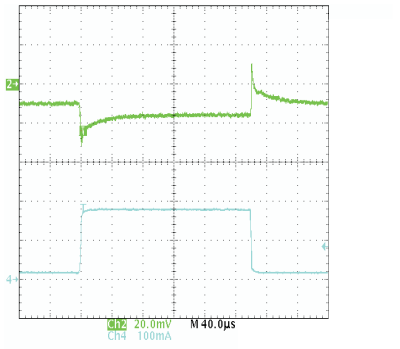

TEST CONDITIONS

V_{IN} = 3.6 V
T_A = 25°C

Load Current = 20 mA to 180 mA
VLDO4 = 2.8 V

CH1: VLDO4 (Green)
CH2: Load Current (Blue)

Figure 18. Load Transient Response LDO4

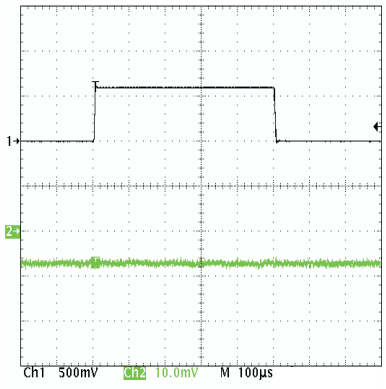

TEST CONDITIONS

V_{IN} = 3.6 V to 4.2 V to 3.6 V
T_A = 25°C

Load Current = 100 mA
VLDO1 = 1.2 V

CH1: VINLDO1 (Black)
CH2: VLDO1 (Green)

Figure 19. Line Transient Response LDO1

7 Parameter Measurement Information

The measurements for the graphs were taken using the EVM in the configuration shown in *Functional Block Diagram*. The inductors used were Coilcraft LPS3010.

Copyright © 2008–2015, Texas Instruments Incorporated

8 Detailed Description

8.1 Overview

The TPS65055 device includes two synchronous step-down converters. The converters operate with typically 2.25-MHz fixed-frequency pulse width modulation (PWM) at moderate to heavy load currents. At light load currents the converters automatically enter power save mode and operate with PFM (pulse frequency modulation).

During PWM operation the converters use a unique fast response voltage mode controller scheme with input voltage feedforward to achieve good line and load regulation allowing the use of small ceramic input and output capacitors. At the beginning of each clock cycle initiated by the clock signal, the P-channel MOSFET switch is turned on and the inductor current ramps up until the comparator trips and the control logic turns off the switch. The current limit comparator also turns off the switch in case the current limit of the P-channel switch is exceeded. After the adaptive dead time preventing shoot through current, the N-channel MOSFET rectifier is turned on and the inductor current ramps down. The next cycle is initiated by the clock signal again turning off the N-channel rectifier and turning on the P-channel switch.

The two DC-DC converters operate synchronized to each other, with converter 1 as the master. A 180° phase shift between converter 1 and converter 2 decreases the input RMS current. Therefore smaller input capacitors can be used.

8.1.1 DCDC1 Converter

The converter 1 output voltage is set by the status of the DEFLDO1 and DEFLDO2 pins. The pins can be pulled low, pulled high or left floating to allow 9 different logic states. See the description for the LDOs for further details. With the TPS65055 it is also possible to change the output voltage of converter DCDC1 through the I^2C compatible interface. The VDCDC1 pin must be directly connected to V_{OUT1} and no external resistor network may be connected.

8.1.2 DCDC2 Converter

The VDCDC2 pin must be directly connected to the DCDC2 converter output voltage. The DCDC2 converter output voltage can be selected through the DEFDCDC2 pin or the I^2C compatible interface.

The DEFDCDC2 pin can either be connected to GND, or to V_{CC}. The converter 2 defaults to 1 V or 1.2 V depending on the logic level of the DEFDCDC2 pin. If DEFDCDC2 is tied to ground, the default is 1.2 V; if it is tied to V_{CC}, the default is 1 V.

With the TPS65055, the voltage can also be changed using the I^2C registers – see *Application and Implementation* for details.

Copyright © 2008–2015, Texas Instruments Incorporated

8.2 Functional Block Diagram

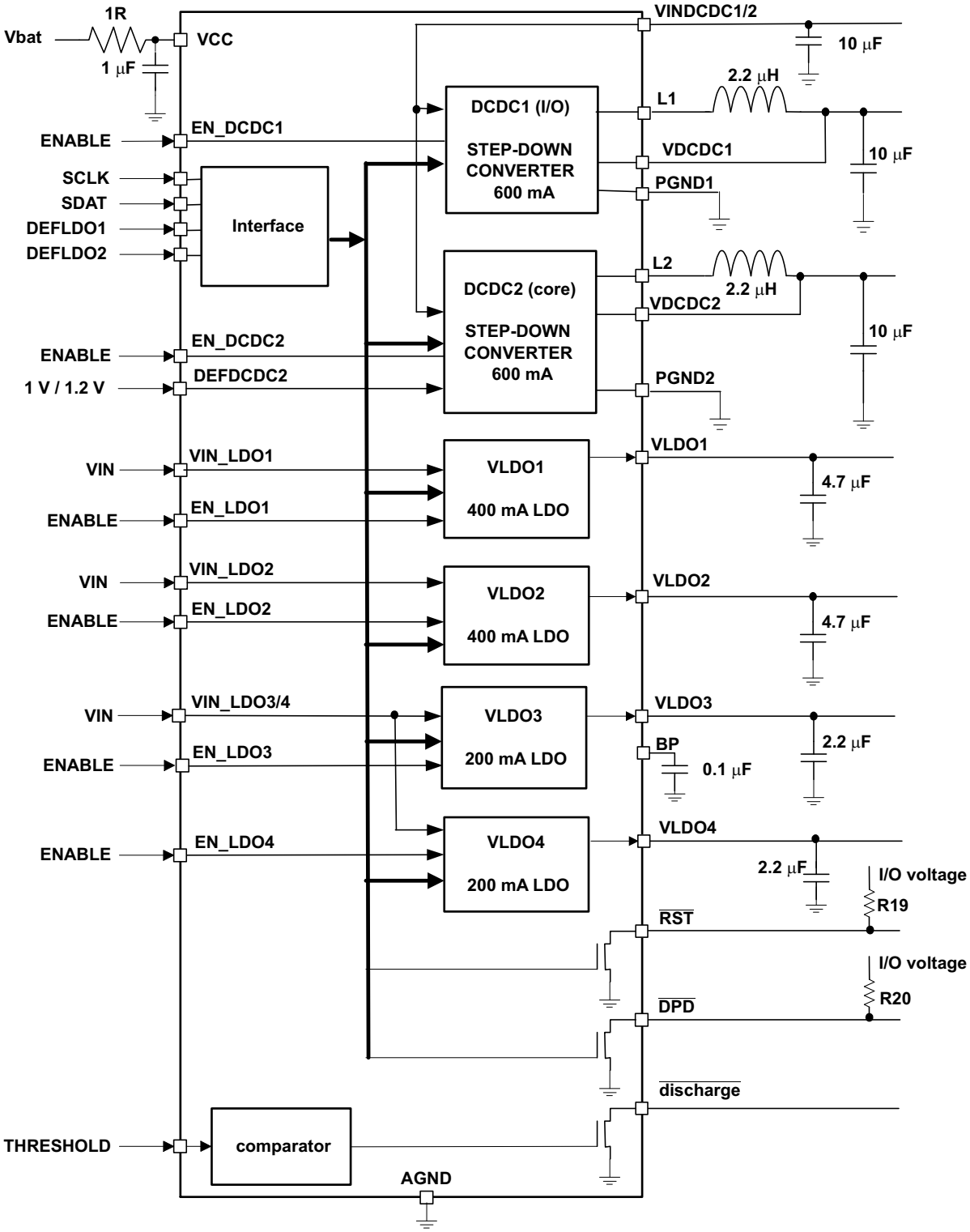

8.3 Feature Description

8.3.1 Power Save Mode

Power save mode is enabled per default and can be disabled using the I^2C compatible interface. If the load current decreases, the converters enter power save mode operation automatically. During power save mode the converters operate with reduced switching frequency in PFM mode and with a minimum quiescent current to maintain high efficiency. The converter positions the output voltage typically 1% above the nominal output voltage. This voltage positioning feature minimizes voltage drops caused by a sudden load step.

To optimize converter efficiency at light load the average current is monitored, and if in PWM mode the inductor current remains below a certain threshold, then power save mode is entered. The typical threshold can be calculated according to:

Equation 1: Average output current threshold to enter PFM mode

$$I_{PFM_enter} = \frac{VIN_{DCDC}}{32\ \Omega} \quad (1)$$

Equation 2: Average output current threshold to leave PFM mode

$$I_{PSMDCDCleave} = \frac{VIN_{DCDC}}{24\ \Omega} \quad (2)$$

During power save mode, the output voltage is monitored with a comparator. As the output voltage falls below the skip comparator threshold (skip comp) of $V_{OUTnominal}$ +1%, the P-channel switch turns on and the converter effectively delivers a constant current as defined above. If the load is below the delivered current, then the output voltage rises until the same threshold is crossed again, whereupon all switching activity ceases, hence reducing the quiescent current to a minimum until the output voltage has dropped below the threshold again. If the load current is greater than the delivered current, then the output voltage falls until it crosses the skip comparator low (skip comp low) threshold set to 1% below nominal V_{out}, whereupon power save mode is exited and the converter returns to PWM mode.

These control methods reduce the quiescent current typically to 12 µA per converter and the switching frequency to a minimum achieving the highest converter efficiency. PFM mode operates with very low output voltage ripple. The ripple depends on the comparator delay and the size of the output capacitor; increasing capacitor values makes the output ripple tend to zero.

8.3.1.1 Dynamic Voltage Positioning

This feature reduces the voltage under/overshoots at load steps from light to heavy load and vice versa. It is activated in power save mode operation when the converter runs in PFM mode. It provides more headroom for both, the voltage drop at a load step and the voltage increase at a load throw-off. This improves load transient behavior.

At light loads, in which the converter operates in PFM mode, the output voltage is regulated typically 1% higher than the nominal value. In case of a load transient from light load to heavy load, the output voltage drops until it reaches the skip comparator low threshold set to –1% below the nominal value and enters PWM mode. During a load throw off from heavy load to light load, the voltage overshoot is also minimized due to active regulation turning on the N-channel switch.

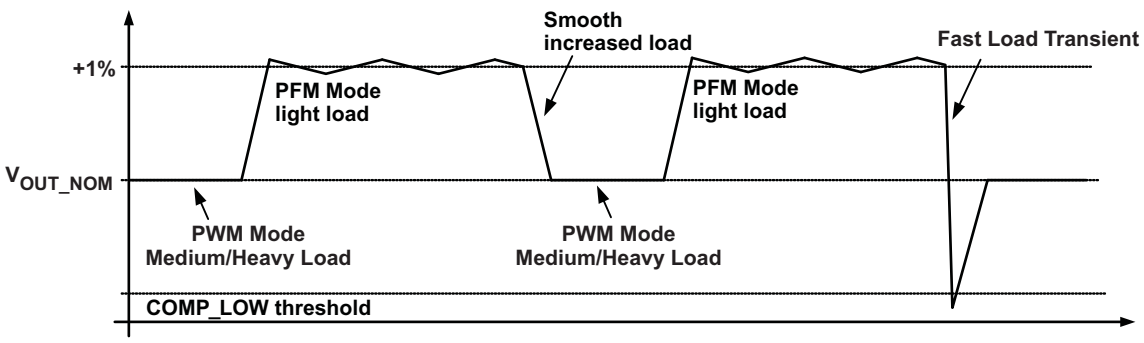

Figure 20. Dynamic Voltage Positioning

Copyright © 2008–2015, Texas Instruments Incorporated

Feature Description (continued)

8.3.1.2 Soft Start

The two converters have an internal soft-start circuit that limits the inrush current during start-up. During soft start, the output voltage ramp up is controlled as shown in Figure 21.

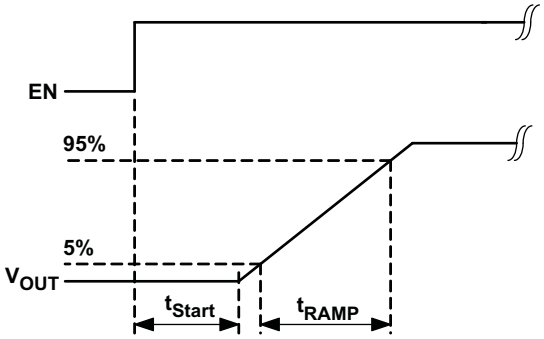

Figure 21. Soft Start

8.3.1.3 100% Duty Cycle Low Dropout Operation

The converters offer a low input to output voltage difference while still maintaining operation with the use of the 100% duty cycle mode. In this mode the P-channel switch is constantly turned on. This is particularly useful in battery-powered applications to achieve the longest operation time by taking full advantage of the whole battery voltage range, for example. The minimum input voltage to maintain regulation depends on the load current and output voltage and can be calculated as:

$$Vin_{min} = Vout_{max} + Iout_{max} \times (RDSon_{max} + R_L) \quad (3)$$

where

- $Iout_{max}$ = maximum output current plus inductor ripple current.
- $RDSon_{max}$ = maximum P-channel switch RDSon.
- R_L = DC resistance of the inductor.
- $Vout_{max}$ = nominal output voltage plus maximum output voltage tolerance.

With decreasing load current, the device automatically switches into pulse skipping operation in which the power stage operates intermittently based on load demand. By running cycles periodically the switching losses are minimized and the device runs with a minimum quiescent current maintaining high efficiency.

In power save mode the converter only operates when the output voltage trips below its nominal output voltage. It ramps up the output voltage with several pulses and goes again into power save mode once the output voltage exceeds the nominal output voltage.

8.3.1.4 Undervoltage Lockout

The undervoltage lockout circuit prevents the device from malfunctioning at low input voltages and from excessive discharge of the battery and disables the converters and LDOs. The undervoltage lockout threshold is typically 1.8 V.

8.3.2 Enable

The DC-DC converters and the LDOs are enabled using external enable pins or enable bits with the I^2C compatible interface. The signal of the enable pin and the enable bit are logically XORed to generate the enable signal to the converter or LDO. There is one enable pin and one enable bit for each of the LDOs or DCDC converters, which allows start-up of each converter independently. If EN_DCDC1, EN_DCDC2, EN_LDO1, EN_LDO2, ENLDO3, or EN_LDO4 are set to high, the corresponding converter starts up with soft start as previously described. The converters and LDOs can also be enabled by setting the enable bits for each of the LDOs or DCDC converters in register REG_CTRL. See the register description for more details.

Copyright © 2008–2015, Texas Instruments Incorporated

Feature Description (continued)

Disabling the DC-DC converter or LDO forces the device into shutdown with a shutdown quiescent current as defined in *Electrical Characteristics*. In this mode, the P- and N-Channel MOSFETs are turned off, and the entire internal control circuitry is switched off. For proper operation the enable pins must be terminated and must not be left floating.

8.3.3 Discharge

The TPS65055 contains a comparator that supervises a voltage applied to the threshold pin and drives a open-drain NMOS according to the input level applied at threshold. If the input voltage at the threshold pin is lower than 1 V, the open-drain NMOS at the discharge output is turned on, pulling the pin to GND. This circuitry is functional as soon as the supply voltage at Vcc exceeds the undervoltage lockout threshold. Therefore the TPS65055 has a shutdown current (all DC-DC converters and LDOs are off) of 9 µA to supply bandgap and comparator.

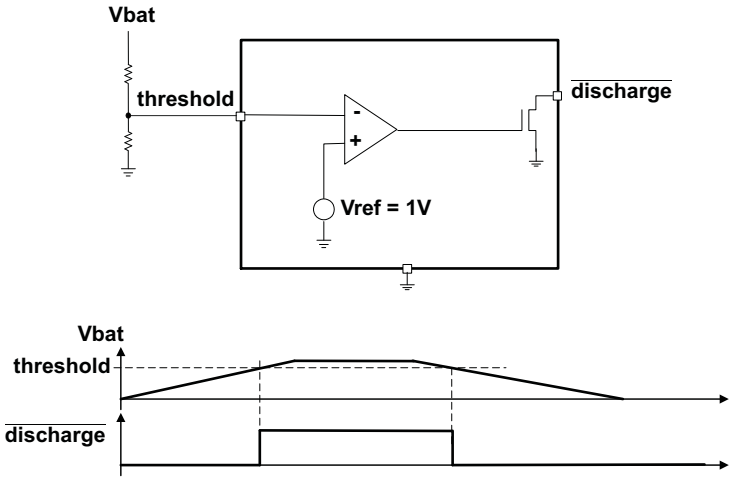

Figure 22. Discharge

8.3.4 RST and DPD

The TPS65055 contains two open-drain outputs that are controlled by the I^2C compatible interface. The RST and DPD outputs are low (internal NMOS active) per default, once the undervoltage lockout threshold has been exceeded. The status of these outputs can be changed using the REG_CTRL register. See *Register Maps* for more details.

8.3.5 Short-Circuit Protection

All outputs are short-circuit protected with a maximum output current as defined in *Electrical Characteristics*.

8.3.6 Thermal Shutdown

As soon as the junction temperature, T_J, exceeds typically 150°C for the DC-DC converters, the device goes into thermal shutdown. In this mode, the P- and N-Channel MOSFETs are turned off. The device continues its operation when the junction temperature falls below the thermal shutdown hysteresis again. A thermal shutdown for one of the DC-DC converters disables both converters simultaneously.

The thermal shutdown temperature for the LDOs are set to typically 140°C. Therefore, a LDO which may be used to power an external voltage never heats up the device that high to turn off the DC-DC converters. If one LDO exceeds the thermal shutdown temperature, all LDOs turn off simultaneously.

8.3.7 LDO1 to LDO4

The low dropout voltage regulators are designed to operate well with low value ceramic input and output capacitors. They operate with input voltages down to 1.5 V. The LDOs offer a maximum dropout voltage of 280 mV at rated output current. Each LDO supports a current limit feature. The LDOs are enabled by the EN_LDO1, ENLDO2, EN_LDO3, and EN_LDO4 pin EXOR with a bit in register REG_CTRL (Reg#02h).

Copyright © 2008–2015, Texas Instruments Incorporated

Feature Description (continued)

8.3.7.1 Default Voltage Setting for LDOs and DCDC1

In the TPS65055, the output voltage of the LDOs and of DCDC1 is set using two pins, DEFLDO1 and DEFLDO2. These pins can either be connected to a logic low level, a logic high level, or left floating to define a set of output voltages for LDO1 to LDO4 and DCDC1 according to the following table. The status of the DEFLDO pins is latched after an undervoltage lockout event (UVLO) and sets the registers LDO_CTRL1, LDO_CTRL2, and DEFDCDC1 accordingly. The output voltage of each LDO and DCDC1 can be changed later by reprogramming these registers. See *Register Maps* for more details.

The TPS65055 default voltage options are adjustable with DEFLDO2 and DEFLDO1 according to the following table:

Table 2. Voltage Table for LDOs and DCDC1

DEFLDO2	DEFLDO1	VLDO1	VLDO2	VLDO3	VLDO4	DCDC1
		400mA LDO	400mA LDO	200mA LDO	200mA LDO	600mA
0	0	1.2 V	1.8 V	2.8 V	1.3 V	2.1 V
0	float	1.2 V	1.8 V	2.8 V	2.8 V	1.8 V
0	1	1.2 V	1.8 V	2.8 V	1.3 V	1.8 V
float	0	1.2 V	1.8 V	2.8 V	2.8 V	2.1 V
float	float	1.2 V	1.8 V	2.8 V	1.8 V	2.1 V
float	1	1.2 V	1.8 V	2.8 V	2.8 V	1.2 V
1	0	1.2 V	1.8 V	2.8 V	1.0 V	1.9 V
1	float	1.2 V	1.8 V	2.8 V	3.0 V	2.1 V
1	1	1.0 V	1.2 V	1.0 V	1.0 V	1.2 V

8.4 Device Functional Modes

The TPS6505x devices are either in the ON or the OFF mode. The OFF mode is entered when the voltage on VCC is below the UVLO threshold, 1.8 V (typically). Once the voltage at VCC has increased above UVLO, the device enters ON mode. In the ON mode, the DCDCs and LDOs are available for use.

8.5 Programming

8.5.1 Interface Specification

8.5.1.1 Serial Interface

The serial interface is compatible with the standard and fast mode I^2C specifications, allowing transfers at up to 400 kHz. The interface adds flexibility to the power supply solution, enabling most functions to be programmed to new values depending on the instantaneous application requirements and charger status to be monitored. Register contents remain intact as long as V_{CC} remains above the UVLO threshold. The TPS65055 has a 7bit address: 1001000, other addresses are available upon contact with the factory. Attempting to read data from register addresses not listed in this section result in 00h being read out.

For normal data transfer, DATA is allowed to change only when CLK is low. Changes when CLK is high are reserved for indicating the start and stop conditions. During data transfer, the data line must remain stable whenever the clock line is high. There is one clock pulse per bit of data. Each data transfer is initiated with a start condition and terminated with a stop condition. When addressed, the TPS65055 device generates an acknowledge bit after the reception of each byte. The master device (microprocessor) must generate an extra clock pulse that is associated with the acknowledge bit. The TPS65055 device must pull down the DATA line during the acknowledge clock pulse so that the DATA line is a stable low during the high period of the acknowledge clock pulse. The DATA line is a stable low during the high period of the acknowledge – related clock pulse. Setup and hold times must be taken into account. During read operations, a master must signal the end of data to the slave by not generating an acknowledge bit on the last byte that was clocked out of the slave. In this case, the slave TPS65055 device must leave the data line high to enable the master to generate the stop condition.

Copyright © 2008–2015, Texas Instruments Incorporated

Programming (continued)

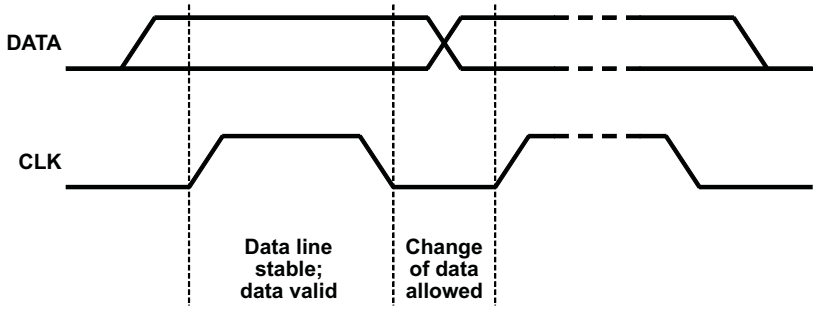

Figure 23. Bit Transfer on the Serial Interface

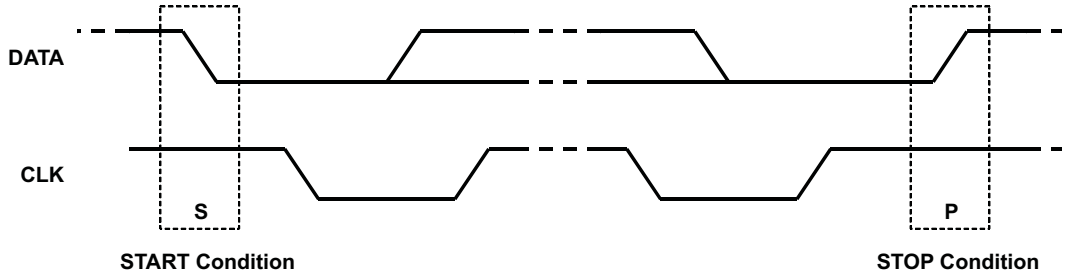

Figure 24. Start and Stop Conditions

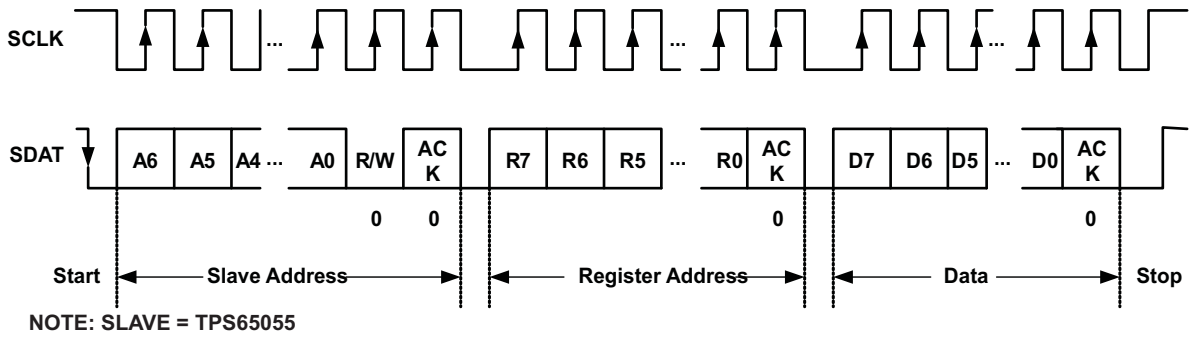

Figure 25. Serial Interface Write to the TPS65055 Device

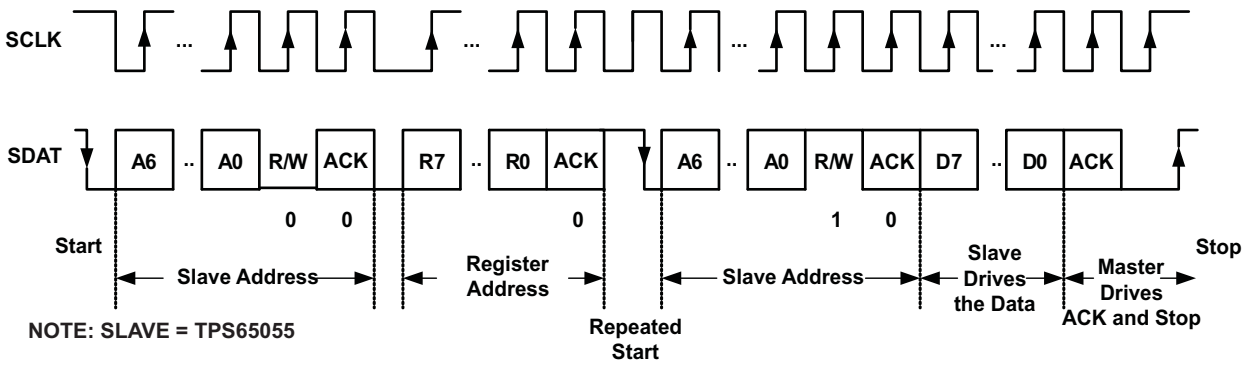

Figure 26. Serial Interface Read From TPS65055: Protocol A

Copyright © 2008–2015, Texas Instruments Incorporated

Programming (continued)

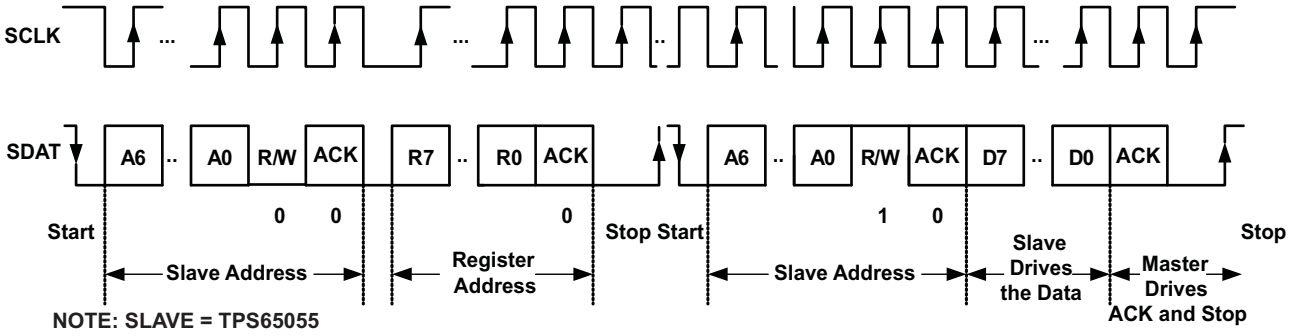

Figure 27. Serial Interface Read From TPS65055: Protocol B

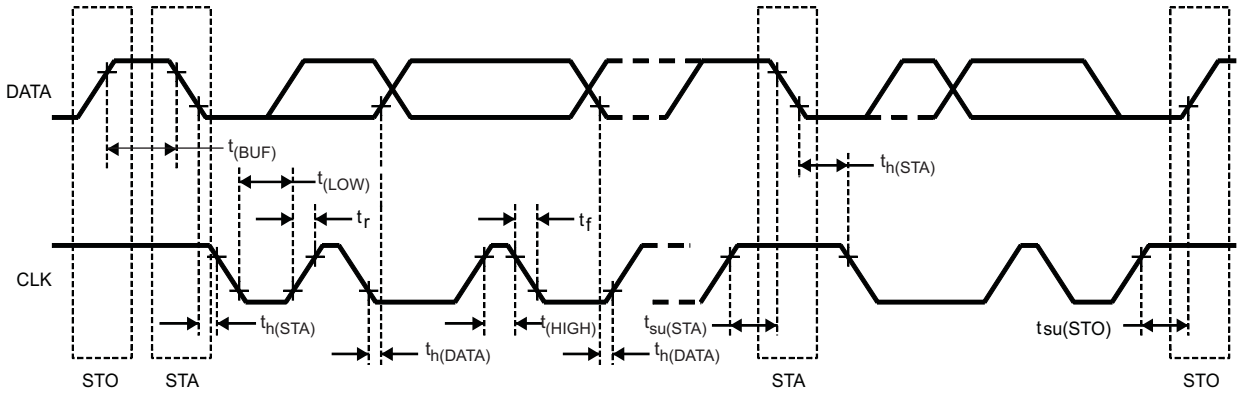

Figure 28. Serial Interface Timing Diagram

Table 3. Serial Interface Timing

		MIN	MAX	UNIT
f_{MAX}	Clock frequency		400	kHz
$t_{wH(HIGH)}$	Clock high time	600		ns
$t_{wL(LOW)}$	Clock low time	1300		ns
t_R	DATA and CLK rise time		300	ns
t_F	DATA and CLK fall time		300	ns
$t_{h(STA)}$	Hold time (repeated) start condition (after this period the first clock pulse is generated)	600		ns
$t_{h(DATA)}$	Setup time for repeated start condition	600		ns
$t_{h(DATA)}$	Data input hold time	100		ns
$t_{su(DATA)}$	Data input setup time	100		ns
$t_{su(STO)}$	Stop condition setup time	600		ns
$t_{(BUF)}$	Bus free time	1300		ns

Copyright © 2008–2015, Texas Instruments Incorporated

8.6 Register Maps

Table 4. PGOODZ. Register Address: 01h (read only)

PGOODZ	B7	B6	B5	B4	B3	B2	B1	BO
Bit name and function	$\overline{\text{discharge}}$	DVM	PGOODZ VDCDC1	PGOODZ VDCDC2	PGOODZ LDO1	PGOODZ LDO2	PGOODZ LDO3	PGOODZ LDO4
Set by signal			PGOODZ VDCDC1	PGOODZ VDCDC2	PGOODZ LDO1	PGOODZ LDO2	PGOODZ LDO3	PGOODZ LDO4
Default value loaded by:			PGOOD VDCDC1	PGOOD VDCDC2	PGOOD LDO1	PGOOD LDO2	PGOOD LDO3	PGOOD LDO4
Read/write	R	R	R	R	R	R	R	R

Bit 7 $\overline{\text{discharge}}$:
0 = Indicates that the comparator input voltage is below the 1 V threshold.
1 = Indicates that the comparator input voltage is above the 1 V threshold.

Bit 6 DVM:
0 = Indicates that the voltage of DCDC2 is not changing.
1 = Indicates that a voltage change of DCDC2 is ongoing.

Bit 5 PGOODZ VDCDC1:
0 = Indicates that the VDCDC1 converter output voltage is within its nominal range.
1 = Indicates that the VDCDC1 converter output voltage is below its target regulation voltage or is disabled.

Bit 4 PGOODZ VDCDC2:
0 = Indicates that the VDCDC2 converter output voltage is within its nominal range.
1 = Indicates that the VDCDC2 converter output voltage is below its target regulation voltage or is disabled.

Bit 3 PGOODZ LDO1:
0 = Indicates that the LDO1 output voltage is within its nominal range.
1 = Indicates that the LDO1 output voltage is below its target regulation voltage or is disabled.

Bit 2 PGOODZ LDO2:
0 = Indicates that the LDO2 output voltage is within its nominal range.
1 = Indicates that LDO2 output voltage is below its target regulation voltage or is disabled.

Bit 1 PGOODZ LDO3:
0 = Indicates that the LDO3 output voltage is within its nominal range.
1 = Indicates that the LDO3 output voltage is below its target regulation voltage or is disabled.

Bit 0 PGOODZ LDO4:
0 = Indicates that the LDO4 output voltage is within its nominal range.
1 = Indicates that the LDO4 output voltage is below its target regulation voltage or is disabled.

Table 5. REG_CTRL. Register Address: 02h (read/write) Default Value: 00h

REG_CTRL	B7	B6	B5	B4	B3	B2	B1	BO
Bit name and function	$\overline{\text{RST}}$	$\overline{\text{DPD}}$	DCDC1 ENABLE	DCDC2 ENABLE	LDO1 ENABLE	LDO2 ENABLE	LDO3 ENABLE	LDO4 ENABLE
Default	0	0	0	0	0	0	0	0
Set by signal								
Default value loaded by:	UVLO	UVLO	UVLO	UVLO	UVLO	UVLO	UVLO	UVLO
Read/write	R/W	R/W	R/W	R/W	R/W	R/W	R/W	R/W

Copyright © 2008–2015, Texas Instruments Incorporated

The REG_CTRL register can be used to disable and enable all power supplies through the serial interface. The following tables indicate how the enable pins and the REG_CTRL register are combined.

EN_DCDC1 Pin	REG_CTRL<5>	DCDC1 Converter
0	0	Disabled
0	1	Enabled
1	0	Enabled
1	1	Disabled
EN_DCDC2 pin	**REG_CTRL<4>**	**DCDC2**
0	0	Disabled
0	1	Enabled
1	0	Enabled
1	1	Disabled
EN_LDO1 pin	**REG_CTRL<3>**	**LDO1**
0	0	Disabled
0	1	Enabled
1	0	Enabled
1	1	Disabled

EN_LDO2 Pin	REG_CTRL<2>	LDO2
0	0	Disabled
0	1	Enabled
1	0	Enabled
1	1	Disabled
EN_LDO3 pin	**REG_CTRL<1>**	**LDO3**
0	0	Disabled
0	1	Enabled
1	0	Enabled
1	1	Disabled
EN_LDO4 pin	**REG_CTRL<0>**	**LDO4**
0	0	Disabled
0	1	Enabled
1	0	Enabled
1	1	Disabled

Bit 7 $\overline{\text{RST}}$:

0 = The internal NMOS is turned on and drives the output to GND.

1 = The internal NMOS is turned off, an external pullup resistor at $\overline{\text{RST}}$ drives the output high.

Bit 6 $\overline{\text{DPD}}$:

0 = The internal NMOS is turned on and drives the output to GND.

1 = The internal NMOS is turned off, an external pullup resistor at $\overline{\text{DPD}}$ drives the output high.

Copyright © 2008–2015, Texas Instruments Incorporated

Table 6. CON_CTRL. Register Address: 03h (read/write) Default Value: 00h

CON_CTRL	B7	B6	B5	B4	B3	B2	B1	BO
Bit name and function					LOW RIPPLE DCDC1	LOW RIPPLE DCDC2	FPWM DCDC1	FPWM DCDC2
Default	0	0	0	0	0	0	0	1
Default value loaded by:					UVLO	UVLO	UVLO	UVLO
Read/write	R	R	R	R	R/W	R/W	R/W	R/W

The CON_CTRL register is used to force any or all of the converters into forced PWM operation, when low output voltage ripple is vital.

Bit 3 LOW RIPPLE DCDC1:
0 = PFM mode operation optimized for high efficiency for DCDC1.
1 = PFM mode operation optimized for low output voltage ripple for DCDC1.

Bit 2 LOW RIPPLE DCDC2:
0 = PFM mode operation optimized for high efficiency for DCDC2.
1 = PFM mode operation optimized for low output voltage ripple for DCDC2.

Bit 1 FPWM DCDC1:
0 = DCDC1 converter operates in PWM / PFM mode.
1 = DCDC1 converter is forced into fixed frequency PWM mode.

Bit 0 FPWM DCDC2:
0 = DCDC2 converter operates in PWM / PFM mode.
1 = DCDC2 converter is forced into fixed frequency PWM mode.

Table 7. CON_CTRL2. Register Address: 04h (read/write) Default Value: 0Fh

CON_CTRL2	B7	B6	B5	B4	B3	B2	B1	BO
Bit name and function	GO		DCDC1 discharge	DCDC2 discharge	LDO1 discharge	LDO2 discharge	LDO3 discharge	LDO4 discharge
Default	0	0	0	0	1	1	1	1
Default value loaded by:	UVLO + DONE*		UVLO	UVLO	UVLO	UVLO	UVLO	UVLO
Read/write	R	R	R/W	R/W	R/W	R/W	R/W	R/W

The CON_CTRL2 register can be used to take control of the inductive converters.

Bit 7 GO:
0 = No change in the output voltage for the DCDC2 converter.

1 = A voltage change for the DCDC2 converter is ongoing. The voltage is changed to the value written into the DEFDCDC2_HIGH or DEFDCDC2_LOW register with the slew rate defined in DEFSLEW. This bit is automatically set and cleared internally. The transition is considered complete in this case when the desired output voltage code has been reached, not when the VDCDC2 output voltage is actually in regulation at the desired voltage. The GO bit is also high when a voltage change is ongoing caused by changing the logic level of the DEFDCDC2 pin.

Bit 5–0 0 = The output capacitor of the associated converter or LDO is not actively discharged when the converter or LDO is disabled.

1 = The output capacitor of the associated converter or LDO is actively discharged when the converter or LDO is disabled. This decreases the fall time of the output voltage at light load.

Copyright © 2008–2015, Texas Instruments Incorporated

Table 8. DEFDCDC2_LOW. Register Address: 05h (read/write) Default Value: 10h

DEFDCDC2_LOW	B7	B6	B5	B4	B3	B2	B1	BO
Bit name and function			DCDC2[5]	DCDC2[4]	DCDC2[3]	DCDC2[2]	DCDC2[1]	DCDC2[0]
Default	0	0	0	1	0	0	0	0
Default value loaded by:			UVLO	UVLO	UVLO	UVLO	UVLO	UVLO
Read/write	R	R	R/W	R/W	R/W	R/W	R/W	R/W

Table 9. DEFDCDC2_HIGH. Register Address: 06h (read/write) Default Value: 08h

DEFDCDC2_HIGH	B7	B6	B5	B4	B3	B2	B1	BO
Bit name and function			DCDC2[5]	DCDC2[4]	DCDC2[3]	DCDC2[2]	DCDC2[1]	DCDC2[0]
Default	0	0	0	0	1	0	0	0
Default value loaded by:			UVLO	UVLO	UVLO	UVLO	UVLO	UVLO
Read/write	R	R	R/W	R/W	R/W	R/W	R/W	R/W

The output voltage for DCDC2 is switched between the value defined in DEFDCDC2_LOW and DEFDCDC2_HIGH depending on the status of the DEFDCDC2 pin. IF DEFDCDC2 is low, the value in DEFDCDC2_LOW is selected, if DEFDCDC2 = high, the value in DEFDCDC2_HIGH is selected.

Copyright © 2008–2015, Texas Instruments Incorporated

Table 10. Voltage Table for DCDC2

	OUTPUT VOLTAGE [V]	B5	B4	B3	B2	B1	B0
0	0.800	0	0	0	0	0	0
1	0.825	0	0	0	0	0	1
2	0.850	0	0	0	0	1	0
3	0.875	0	0	0	0	1	1
4	0.900	0	0	0	1	0	0
5	0.925	0	0	0	1	0	1
6	0.950	0	0	0	1	1	0
7	0.975	0	0	0	1	1	1
8	1.000	0	0	1	0	0	0
9	1.025	0	0	1	0	0	1
10	1.050	0	0	1	0	1	0
11	1.075	0	0	1	0	1	1
12	1.100	0	0	1	1	0	0
13	1.125	0	0	1	1	0	1
14	1.150	0	0	1	1	1	0
15	1.175	0	0	1	1	1	1
16	1.200	0	1	0	0	0	0
17	1.225	0	1	0	0	0	1
18	1.250	0	1	0	0	1	0
19	1.275	0	1	0	0	1	1
20	1.300	0	1	0	1	0	0
21	1.325	0	1	0	1	0	1
22	1.350	0	1	0	1	1	0
23	1.375	0	1	0	1	1	1
24	1.400	0	1	1	0	0	0
25	1.425	0	1	1	0	0	1
26	1.450	0	1	1	0	1	0
27	1.475	0	1	1	0	1	1
28	1.500	0	1	1	1	0	0
29	1.525	0	1	1	1	0	1
30	1.550	0	1	1	1	1	0
31	1.575	0	1	1	1	1	1

Copyright © 2008–2015, Texas Instruments Incorporated

Table 11. Voltage Table for DCDC2

	OUTPUT VOLTAGE [V]	B5	B4	B3	B2	B1	B0
0	1.600	1	0	0	0	0	0
1	1.650	1	0	0	0	0	1
2	1.700	1	0	0	0	1	0
3	1.750	1	0	0	0	1	1
4	1.800	1	0	0	1	0	0
5	1.850	1	0	0	1	0	1
6	1.900	1	0	0	1	1	0
7	1.950	1	0	0	1	1	1
8	2.000	1	0	1	0	0	0
9	2.050	1	0	1	0	0	1
10	2.100	1	0	1	0	1	0
11	2.150	1	0	1	0	1	1
12	2.200	1	0	1	1	0	0
13	2.250	1	0	1	1	0	1
14	2.300	1	0	1	1	1	0
15	2.350	1	0	1	1	1	1
16	2.400	1	1	0	0	0	0
17	2.450	1	1	0	0	0	1
18	2.500	1	1	0	0	1	0
19	2.550	1	1	0	0	1	1
20	2.600	1	1	0	1	0	0
21	2.650	1	1	0	1	0	1
22	2.700	1	1	0	1	1	0
23	2.750	1	1	0	1	1	1
24	2.800	1	1	1	0	0	0
25	2.850	1	1	1	0	0	1
26	2.900	1	1	1	0	1	0
27	2.950	1	1	1	0	1	1
28	3.000	1	1	1	1	0	0
29	3.100	1	1	1	1	0	1
30	3.200	1	1	1	1	1	0
31	3.300	1	1	1	1	1	1

Table 12. DEFSLEW. Register Address: 07h (read/write) Default Value: 06h

DEFSLEW	B7	B6	B5	B4	B3	B2	B1	BO
Bit name and function						SLEW2	SLEW1	SLEW0
Default	0	0	0	0	0	1	1	0
Default value loaded by:						UVLO	UVLO	UVLO
Read/write	R	R	R	R	R	R/W	R/W	R/W

SLEW2	SLEW1	SLEW0	VDCDC3 SLEW RATE
0	0	0	0.11 mV/µs
0	0	1	0.22 mV/µs
0	1	0	0.45 mV/µs
0	1	1	0.9 mV/µs
1	0	0	1.8 mV/µs
1	0	1	3.6 mV/µs
1	1	0	7.2 mV/µs
1	1	1	Immediate

Table 13. LDO_CTRL1. Register Address: 08h (r/w) Default Value: Set With DEFLDO1, DEFLDO2

LDO_CTRL	B7	B6	B5	B4	B3	B2	B1	BO
Bit name and function		LDO2[2]	LDO2[1]	LDO2[0]		LDO1[2]	LDO1[1]	LDO1[0]
Default	0	DEFLDO pins	DEFLDO pins	DEFLDO pins	0	DEFLDO pins	DEFLDO pins	DEFLDO pins
Default value loaded by:		UVLO	UVLO	UVLO		UVLO	UVLO	UVLO
Read/write	R	R/W	R/W	R/W	R	R/W	R/W	R/W

The LDO_CTRLx registers can be used to set the output voltages of LDO1 to LDO4. The default value is loaded at power-up depending on the status of the DEFLDO pins. See *Default Voltage Setting for LDOs and DCDC1* for details. The status of the DEFLDO pins is latched after the undervoltage lockout threshold is exceeded, so the voltage can be changed by reprogramming the register content.

LDO2[2]	LDO2[1]	LDO2[0]	LDO2 OUTPUT VOLTAGE
0	0	0	1.2 V
0	0	1	1.3 V
0	1	0	1.8 V
0	1	1	2.6 V
1	0	0	2.7 V
1	0	1	2.8 V
1	1	0	2.9 V
1	1	1	3 V

LDO1[2]	LDO1[1]	LDO1[0]	LDO1 OUTPUT VOLTAGE
0	0	0	0.8 V
0	0	1	1 V
0	1	0	1.2 V
0	1	1	1.5 V
1	0	0	1.8 V
1	0	1	2.1 V
1	1	0	2.5 V
1	1	1	2.8 V

Copyright © 2008–2015, Texas Instruments Incorporated

Table 14. LDO_CTRL2. Register Address: 09h (r/w) Default Value: Set With DEFLDO1, DEFLDO2

LDO_CTRL	B7	B6	B5	B4	B3	B2	B1	BO
Bit name and function		LDO4[2]	LDO4[1]	LDO4[0]		LDO3[2]	LDO3[1]	LDO3[0]
Default	0	DEFLDO pins	DEFLDO pins	DEFLDO pins	0	DEFLDO pins	DEFLDO pins	DEFLDO pins
Default value loaded by:		UVLO	UVLO	UVLO		UVLO	UVLO	UVLO
Read/write	R	R/W	R/W	R/W	R	R/W	R/W	R/W

The default value is loaded at power-up depending on the status of the DEFLDO pins. See *Default Voltage Setting for LDOs and DCDC1* for details. The status of the DEFLDO pins is latched after the undervoltage lockout threshold is exceeded, so the voltage can be changed by reprogramming the register content.

LDO4[2]	LDO4[1]	LDO4[0]	LDO4 OUTPUT VOLTAGE
0	0	0	1 V
0	0	1	1.2 V
0	1	0	1.3 V
0	1	1	1.8 V
1	0	0	2.6 V
1	0	1	2.7 V
1	1	0	2.8 V
1	1	1	3 V

LDO3[2]	LDO3[1]	LDO3[0]	LDO3 OUTPUT VOLTAGE
0	0	0	0.8 V
0	0	1	1 V
0	1	0	1.2 V
0	1	1	1.5 V
1	0	0	1.8 V
1	0	1	2.1 V
1	1	0	2.5 V
1	1	1	2.8 V

Table 15. DEFDCDC1. Register Address: 0Ah (r/w) Default Value: Set With DEFLDO1, DEFLDO2

DEFDCDC1	B7	B6	B5	B4	B3	B2	B1	BO
Bit name and function			DCDC1[5]	DCDC1[4]	DCDC1[3]	DCDC1[2]	DCDC1[1]	DCDC1[0]
Default	0	0	DEFLDO pins	DEFLDO pins	DEFLDO pins	DEFLDO pins	DEFLDO pins	DEFLDO pins
Default value loaded by:		UVLO	UVLO	UVLO	UVLO	UVLO	UVLO	UVLO
Read/write	R	R	R/W	R/W	R/W	R/W	R/W	R/W

Per default the DCDC1 converter is internally adjustable and the default output voltage for DCDC1 (bits B0 to B5) depends on the status of the DEFLDO pins – see *Default Voltage Setting for LDOs and DCDC1*. The status of the DEFLDO pins is latched after the undervoltage lockout threshold is exceeded, so the voltage can be changed by reprogramming the register content.

DCDC1 voltage is listed in Table 16.

Copyright © 2008–2015, Texas Instruments Incorporated

Table 16. Voltage Table for DCDC1

	OUTPUT VOLTAGE [V]	B5	B4	B3	B2	B1	B0
0	0.800	0	0	0	0	0	0
1	0.825	0	0	0	0	0	1
2	0.850	0	0	0	0	1	0
3	0.875	0	0	0	0	1	1
4	0.900	0	0	0	1	0	0
5	0.925	0	0	0	1	0	1
6	0.950	0	0	0	1	1	0
7	0.975	0	0	0	1	1	1
8	1.000	0	0	1	0	0	0
9	1.025	0	0	1	0	0	1
10	1.050	0	0	1	0	1	0
11	1.075	0	0	1	0	1	1
12	1.100	0	0	1	1	0	0
13	1.125	0	0	1	1	0	1
14	1.150	0	0	1	1	1	0
15	1.175	0	0	1	1	1	1
16	1.200	0	1	0	0	0	0
17	1.225	0	1	0	0	0	1
18	1.250	0	1	0	0	1	0
19	1.275	0	1	0	0	1	1
20	1.300	0	1	0	1	0	0
21	1.325	0	1	0	1	0	1
22	1.350	0	1	0	1	1	0
23	1.375	0	1	0	1	1	1
24	1.400	0	1	1	0	0	0
25	1.425	0	1	1	0	0	1
26	1.450	0	1	1	0	1	0
27	1.475	0	1	1	0	1	1
28	1.500	0	1	1	1	0	0
29	1.525	0	1	1	1	0	1
30	1.550	0	1	1	1	1	0
31	1.575	0	1	1	1	1	1

Copyright © 2008–2015, Texas Instruments Incorporated

Table 17. Voltage Table for DCDC1

	OUTPUT VOLTAGE [V]	B5	B4	B3	B2	B1	B0
0	1.600	1	0	0	0	0	0
1	1.650	1	0	0	0	0	1
2	1.700	1	0	0	0	1	0
3	1.750	1	0	0	0	1	1
4	1.800	1	0	0	1	0	0
5	1.850	1	0	0	1	0	1
6	1.900	1	0	0	1	1	0
7	1.950	1	0	0	1	1	1
8	2.000	1	0	1	0	0	0
9	2.050	1	0	1	0	0	1
10	2.100	1	0	1	0	1	0
11	2.150	1	0	1	0	1	1
12	2.200	1	0	1	1	0	0
13	2.250	1	0	1	1	0	1
14	2.300	1	0	1	1	1	0
15	2.350	1	0	1	1	1	1
16	2.400	1	1	0	0	0	0
17	2.450	1	1	0	0	0	1
18	2.500	1	1	0	0	1	0
19	2.550	1	1	0	0	1	1
20	2.600	1	1	0	1	0	0
21	2.650	1	1	0	1	0	1
22	2.700	1	1	0	1	1	0
23	2.750	1	1	0	1	1	1
24	2.800	1	1	1	0	0	0
25	2.850	1	1	1	0	0	1
26	2.900	1	1	1	0	1	0
27	2.950	1	1	1	0	1	1
28	3.000	1	1	1	1	0	0
29	3.100	1	1	1	1	0	1
30	3.200	1	1	1	1	1	0
31	3.300	1	1	1	1	1	1

Table 18. VERSION. Register Address: 0Bh (r)

VERSION	B7	B6	B5	B4	B3	B2	B1	BO
Default	0	0	0	0	0	0	0	0
Read/write	R	R	R	R	R	R	R	R

Copyright © 2008–2015, Texas Instruments Incorporated

9 Application and Implementation

NOTE

Information in the following applications sections is not part of the TI component specification, and TI does not warrant its accuracy or completeness. TI's customers are responsible for determining suitability of components for their purposes. Customers should validate and test their design implementation to confirm system functionality.

9.1 Application Information

This device integrates two step-down converters and four LDOs, which can be used to power the voltage rails needed by a processor or any other application. The PMIC can be controlled through the ENABLE and MODE pins or sequenced from the VIN using RC delay circuits. In addition to these control pins the device can be controlled by software through I^2C interface. Thus, the TPS65055 is very flexible and compatible with many application systems. There is a logic output, RESET, provide the application processor or load a logic signal indicating power good or reset.

Copyright © 2008–2015, Texas Instruments Incorporated

9.2 Typical Application

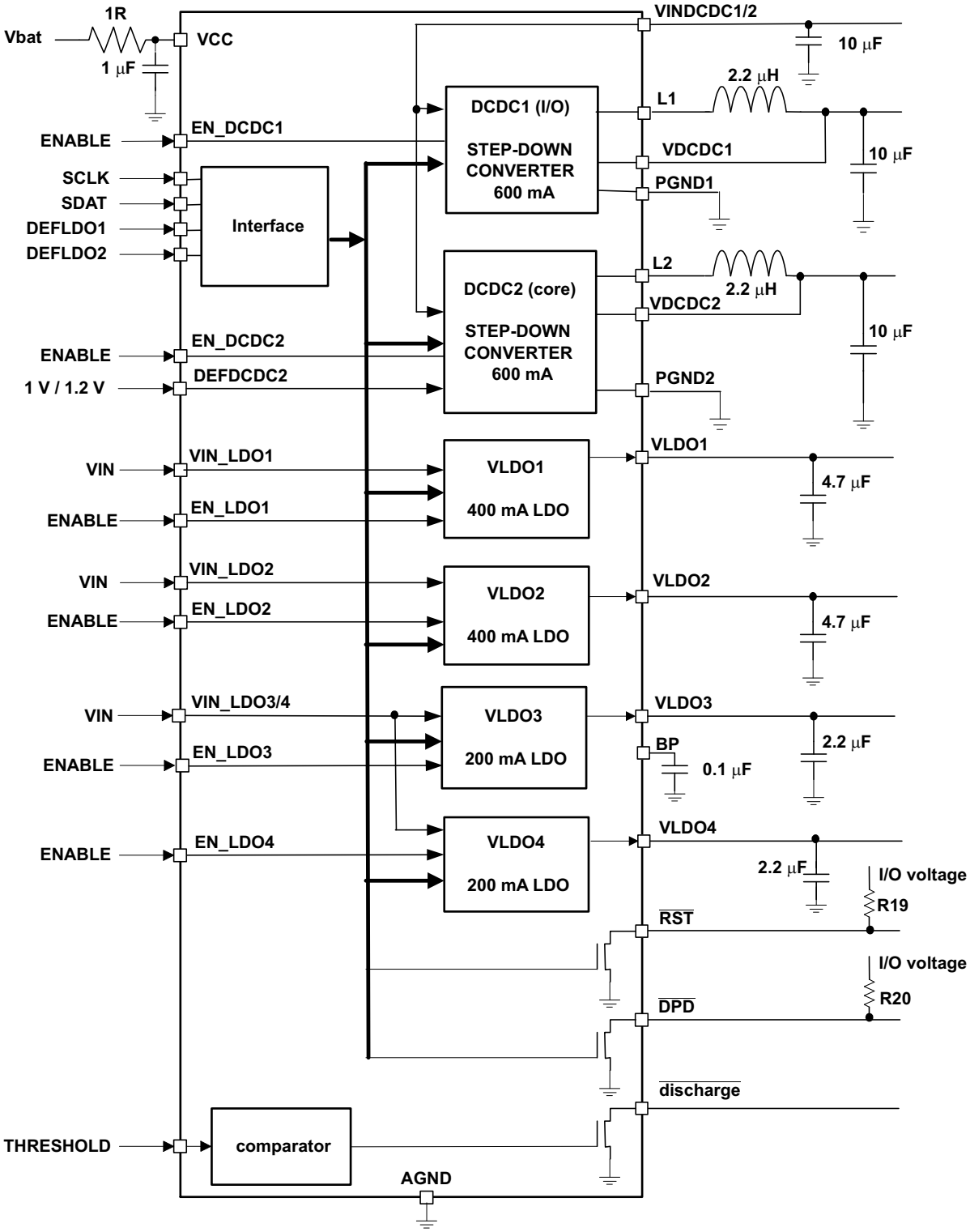

Figure 29. Typical Application Schematic

Typical Application (continued)

9.2.1 Design Requirements

The TPS6505x devices have only a few design requirements. Use the following parameters for the design examples:

- 1-µF bypass capacitor on VCC, located as close as possible to the VCC pin to ground.
- VCC and VINDCDC1/2 must be connected to the same voltage supply with minimal voltage difference.
- Input capacitors must be present on the VINDCDC1/2, VIN_LDO1, VINLDO2, and VIN_LDO3/4 supplies if used.
- Output inductor and capacitors must be used on the outputs of the DC-DC converters if used.
- Output capacitors must be used on the outputs of the LDOs if used.

9.2.2 Detailed Design Procedure

9.2.2.1 Output Voltage Setting

9.2.2.1.1 Converter 1 (DCDC1)

The output voltage of converter 1 is set by the status of the DEFLDO pins and the I^2C compatible interface. See Table 2 for output voltage options.

9.2.2.1.2 Converter 2 (DCDC2)

The output voltage of converter 2 is selected with the DEFDCDC2 pin.

Table 19. Default Fixed Output Voltages

CONVERTER 2	DEFDCDC2 = LOW	DEFDCDC2 = HIGH
TPS65055	1.2 V	1 V

9.2.2.2 Output Filter Design (Inductor and Output Capacitor)

9.2.2.2.1 Inductor Selection

The two converters operate typically with 2.2 µH output inductors. Larger or smaller inductor values can be used to optimize the performance of the device for specific operation conditions. The selected inductor has to be rated for its DC resistance and saturation current. The DC resistance of the inductance influences directly the efficiency of the converter. Therefore an inductor with the lowest DC resistance should be selected for highest efficiency. Due to the internal control scheme used, the inductor should have a minimum value of 3.3 µH for an output voltage of 3 V or higher.

Equation 4 calculates the maximum inductor current under static load conditions. The saturation current of the inductor should be rated higher than the maximum inductor current as calculated with Equation 4. This is recommended because during heavy load transient the inductor current rises above the calculated value.

Formula 1: $$\Delta I_L = Vout \times \frac{1-\frac{Vout}{Vin}}{L \times f} \qquad (3)\quad I_{Lmax} = I_{outmax} + \frac{\Delta I_L}{2}$$

where

- f = Switching frequency (2.25 MHz typical)
- L = Inductor value
- ΔI_L = Peak-to-peak inductor ripple current
- I_{Lmax} = Maximum inductor current (4)

The highest inductor current occurs at maximum Vin.

Open core inductors have a soft saturation characteristic and they can usually handle higher inductor currents versus a comparable shielded inductor.

Copyright © 2008–2015, Texas Instruments Incorporated

A more conservative approach is to select the inductor current rating just for the maximum switch current of the corresponding converter. It must be considered, that the core material from inductor to inductor differs and has an impact on the efficiency especially at high switching frequencies.

Refer to Table 20 and the typical applications for possible inductors.

Table 20. Tested Inductors

INDUCTOR TYPE	INDUCTOR VALUE	SUPPLIER
LPS3010	2.2 µH	Coilcraft
VLF3010	2.2 µH	TDK
LPS4012	2.2 µH	Coilcraft
VLF4012	2.2 µH	TDK

9.2.2.2.2 Output Capacitor Selection

The advanced fast response voltage mode control scheme of the two converters allows the use of small ceramic capacitors with a typical value of 22 µF, without having large output voltage under and overshoots during heavy load transients. Ceramic capacitors having low ESR values result in the lowest output voltage ripple and are therefore recommended. Refer to Table 21 for recommended components.

If ceramic output capacitors are used, the capacitor RMS ripple current rating always meets the application requirements. For completeness, the RMS ripple current is calculated as:

$$I_{RMSCout} = Vout \times \frac{1-\frac{Vout}{Vin}}{L \times f} \times \frac{1}{2 \times \sqrt{3}} \quad (5)$$

At nominal load current the inductive converters operate in PWM mode and the overall output voltage ripple is the sum of the voltage spike caused by the output capacitor ESR plus the voltage ripple caused by charging and discharging the output capacitor:

$$\Delta Vout = Vout \times \frac{1-\frac{Vout}{Vin}}{L \times f} \times \left(\frac{1}{8 \times Cout \times f} + ESR \right) \quad (6)$$

Where the highest output voltage ripple occurs at the highest input voltage, Vin.

At light load currents the converters operate in power save mode, and the output voltage ripple is dependent on the output capacitor value. The output voltage ripple is set by the internal comparator delay and the external capacitor. The typical output voltage ripple is less than 1% of the nominal output voltage.

9.2.2.2.3 Input Capacitor Selection

Because of the nature of the buck converter having a pulsating input current, a low ESR input capacitor is required for best input voltage filtering and minimizing interference with other circuits caused by high input voltage spikes. The converters require a ceramic input capacitor of 10 µF. The input capacitor can be increased without limit for better input voltage filtering.

Table 21. Possible Capacitors

CAPACITOR VALUE	SIZE	SUPPLIER	TYPE
22 µF	0805	TDK C2012X5R0J226MT	Ceramic
22 µF	0805	Taiyo Yuden JMK212BJ226MG	Ceramic
10 µF	0805	Taiyo Yuden JMK212BJ106M	Ceramic
10 µF	0805	TDK C2012X5R0J106M	Ceramic
10 µF	0603	Taiyo Yuden JMK107BJ106MA	Ceramic

Copyright © 2008–2015, Texas Instruments Incorporated

9.2.3 Application Curves

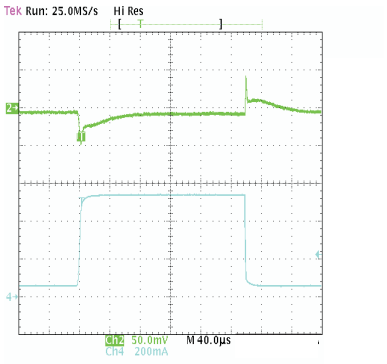

TEST CONDITIONS

V_{IN} = 3.6 V
T_A = 25°C

Load Current = 60 mA to 540 mA
VDCDC1 = 2.1 V

CH1: VDCD1 (Green)
CH2: Load Current (Blue)

Figure 30. Load Transient Response DCDC1; PWM

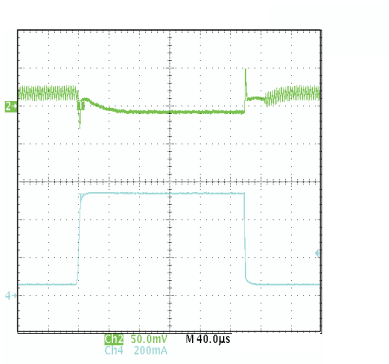

TEST CONDITIONS

V_{IN} = 3.6 V
T_A = 25°C

Load Current = 60 mA to 540 mA
VDCDC1 = 2.1 V

CH1: VDCD1 (Green)
CH2: Load Current (Blue)

Figure 31. Load Transient Response DCDC1; PFM

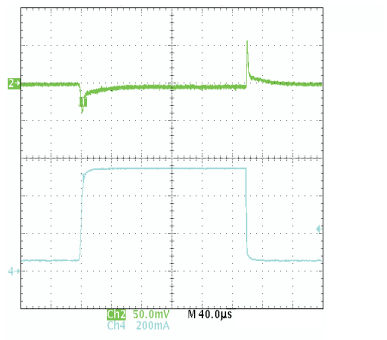

TEST CONDITIONS

V_{IN} = 3.6 V
T_A = 25°C

Load Current = 60 mA to 540 mA
VDCDC1 = 2.1 V

CH1: VDCD1 (Green)
CH2: Load Current (Blue)

Figure 32. Load Transient Response DCDC2; PWM

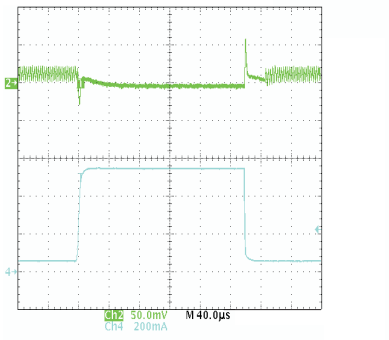

TEST CONDITIONS

V_{IN} = 3.6 V
T_A = 25°C

Load Current = 60 mA to 540 mA
VDCDC1 = 2.1 V

CH1: VDCD1 (Green)
CH2: Load Current (Blue)

Figure 33. Load Transient Response DCDC2; PFM

Copyright © 2008–2015, Texas Instruments Incorporated

10 Power Supply Recommendations

Any supply from 2.5 V to 6 V will work as long as the power supply can supply enough current at the VIN voltage that the application demands.

11 Layout

11.1 Layout Guidelines

- The input capacitors for the DC-DC converters should be placed as close as possible to the VINDCDC1/2 pin and the PGND1 and PGND2 pins.
- The inductor of the output filter should be placed as close as possible to the device to provide the shortest switch node possible, reducing the noise emitted into the system and increasing the efficiency.
- Sense the feedback voltage from the output at the output capacitors to ensure the best DC accuracy. Feedback should be routed away from noisy sources such as the inductor. If possible route on the opposing side as the switch node and inductor and place a GND plane between the feedback and the noisy sources or keepout underneath them entirely.
- Place the output capacitors as close as possible to the inductor to reduce the feedback loop as much as possible. This will ensure best regulation at the feedback point.
- Place the device as close as possible to the most demanding or sensitive load. The output capacitors should be placed close to the input of the load. This will ensure the best AC performance possible.
- The input and output capacitors for the LDOs should be placed close to the device for best regulation performance.
- TI recommends using a common ground plane for the layout of this device. The AGND can be separated from the PGND but, a large low parasitic PGND is required to connect the PGNDx pins to the CIN and external PGND connections. If the AGND and PGND planes are separated, have one connection point to reference the grounds together. Place this connection point close to the IC.

Copyright © 2008–2015, Texas Instruments Incorporated

11.2 Layout Example

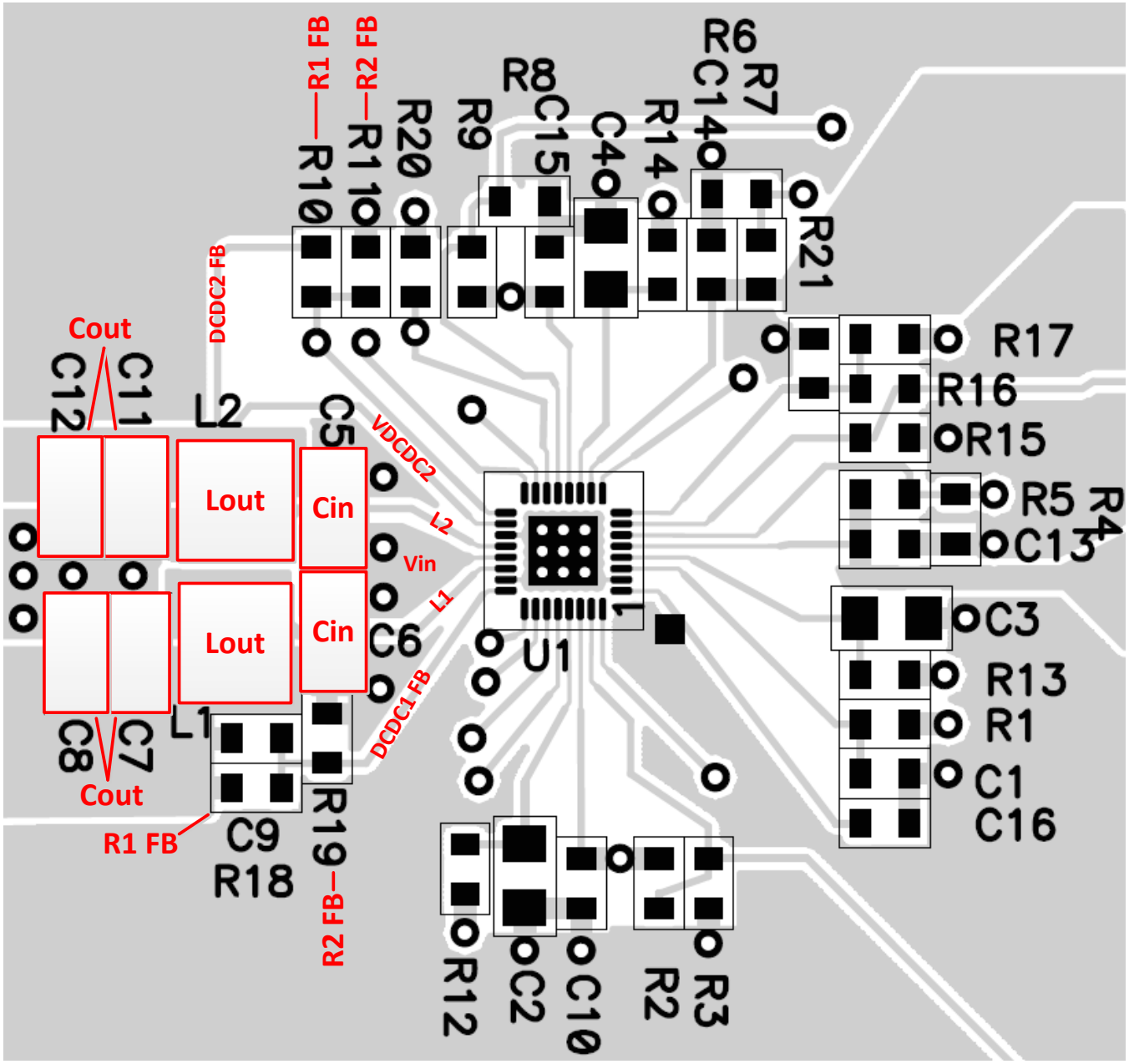

Figure 34. Layout Example From EVM for TPS6505x

Copyright © 2008–2015, Texas Instruments Incorporated

12 Device and Documentation Support

12.1 Device Support

12.1.1 Third-Party Products Disclaimer

TI'S PUBLICATION OF INFORMATION REGARDING THIRD-PARTY PRODUCTS OR SERVICES DOES NOT CONSTITUTE AN ENDORSEMENT REGARDING THE SUITABILITY OF SUCH PRODUCTS OR SERVICES OR A WARRANTY, REPRESENTATION OR ENDORSEMENT OF SUCH PRODUCTS OR SERVICES, EITHER ALONE OR IN COMBINATION WITH ANY TI PRODUCT OR SERVICE.

12.2 Community Resources

The following links connect to TI community resources. Linked contents are provided "AS IS" by the respective contributors. They do not constitute TI specifications and do not necessarily reflect TI's views; see TI's Terms of Use.

TI E2E™ Online Community ***TI's Engineer-to-Engineer (E2E) Community.*** Created to foster collaboration among engineers. At e2e.ti.com, you can ask questions, share knowledge, explore ideas and help solve problems with fellow engineers.

Design Support ***TI's Design Support*** Quickly find helpful E2E forums along with design support tools and contact information for technical support.

12.3 Trademarks

OMAP, PowerPAD, E2E are trademarks of Texas Instruments.
All other trademarks are the property of their respective owners.

12.4 Electrostatic Discharge Caution



These devices have limited built-in ESD protection. The leads should be shorted together or the device placed in conductive foam during storage or handling to prevent electrostatic damage to the MOS gates.

12.5 Glossary

SLYZ022 — *TI Glossary*.

This glossary lists and explains terms, acronyms, and definitions.

13 Mechanical, Packaging, and Orderable Information

The following pages include mechanical, packaging, and orderable information. This information is the most current data available for the designated devices. This data is subject to change without notice and revision of this document. For browser-based versions of this data sheet, refer to the left-hand navigation.

Copyright © 2008–2015, Texas Instruments Incorporated

PACKAGING INFORMATION

Orderable part number	Status (1)	Material type (2)	Package | Pins	Package qty | Carrier	RoHS (3)	Lead finish/ Ball material (4)	MSL rating/ Peak reflow (5)	Op temp (°C)	Part marking (6)
TPS65055RSMR	Active	Production	VQFN (RSM) | 32	3000 | LARGE T&R	Yes	NIPDAU	Level-2-260C-1 YEAR	-40 to 85	TPS 65055
TPS65055RSMR.B	Active	Production	VQFN (RSM) | 32	3000 | LARGE T&R	Yes	NIPDAU	Level-2-260C-1 YEAR	-40 to 85	TPS 65055
TPS65055RSMT	Active	Production	VQFN (RSM) | 32	250 | SMALL T&R	Yes	NIPDAU	Level-2-260C-1 YEAR	-40 to 85	TPS 65055
TPS65055RSMT.B	Active	Production	VQFN (RSM) | 32	250 | SMALL T&R	Yes	NIPDAU	Level-2-260C-1 YEAR	-40 to 85	TPS 65055

(1) **Status:** For more details on status, see our product life cycle.

(2) **Material type:** When designated, preproduction parts are prototypes/experimental devices, and are not yet approved or released for full production. Testing and final process, including without limitation quality assurance, reliability performance testing, and/or process qualification, may not yet be complete, and this item is subject to further changes or possible discontinuation. If available for ordering, purchases will be subject to an additional waiver at checkout, and are intended for early internal evaluation purposes only. These items are sold without warranties of any kind.

(3) **RoHS values:** Yes, No, RoHS Exempt. See the TI RoHS Statement for additional information and value definition.

(4) **Lead finish/Ball material:** Parts may have multiple material finish options. Finish options are separated by a vertical ruled line. Lead finish/Ball material values may wrap to two lines if the finish value exceeds the maximum column width.

(5) **MSL rating/Peak reflow:** The moisture sensitivity level ratings and peak solder (reflow) temperatures. In the event that a part has multiple moisture sensitivity ratings, only the lowest level per JEDEC standards is shown. Refer to the shipping label for the actual reflow temperature that will be used to mount the part to the printed circuit board.

(6) **Part marking:** There may be an additional marking, which relates to the logo, the lot trace code information, or the environmental category of the part.

Multiple part markings will be inside parentheses. Only one part marking contained in parentheses and separated by a "~" will appear on a part. If a line is indented then it is a continuation of the previous line and the two combined represent the entire part marking for that device.

Important Information and Disclaimer: The information provided on this page represents TI's knowledge and belief as of the date that it is provided. TI bases its knowledge and belief on information provided by third parties, and makes no representation or warranty as to the accuracy of such information. Efforts are underway to better integrate information from third parties. TI has taken and continues to take reasonable steps to provide representative and accurate information but may not have conducted destructive testing or chemical analysis on incoming materials and chemicals. TI and TI suppliers consider certain information to be proprietary, and thus CAS numbers and other limited information may not be available for release.

In no event shall TI's liability arising out of such information exceed the total purchase price of the TI part(s) at issue in this document sold by TI to Customer on an annual basis.

TAPE AND REEL INFORMATION

REEL DIMENSIONS

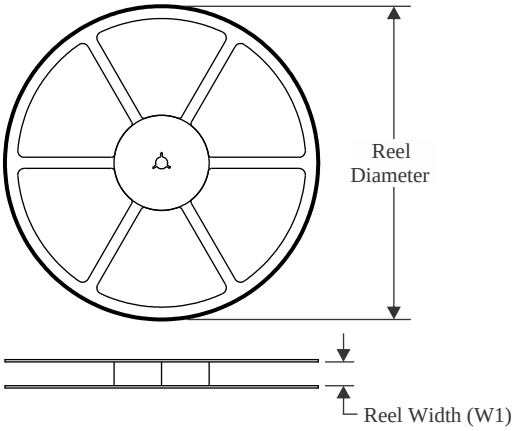

TAPE DIMENSIONS

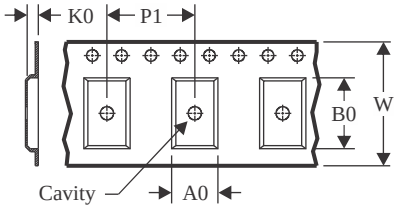

A0	Dimension designed to accommodate the component width
B0	Dimension designed to accommodate the component length
K0	Dimension designed to accommodate the component thickness
W	Overall width of the carrier tape
P1	Pitch between successive cavity centers

QUADRANT ASSIGNMENTS FOR PIN 1 ORIENTATION IN TAPE

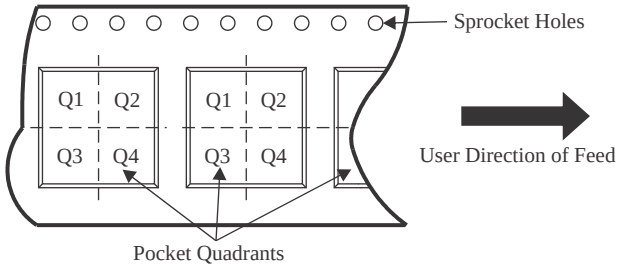

*All dimensions are nominal

Device	Package Type	Package Drawing	Pins	SPQ	Reel Diameter (mm)	Reel Width W1 (mm)	A0 (mm)	B0 (mm)	K0 (mm)	P1 (mm)	W (mm)	Pin1 Quadrant
TPS65055RSMR	VQFN	RSM	32	3000	330.0	12.4	4.25	4.25	1.15	8.0	12.0	Q2
TPS65055RSMT	VQFN	RSM	32	250	180.0	12.4	4.25	4.25	1.15	8.0	12.0	Q2

TAPE AND REEL BOX DIMENSIONS

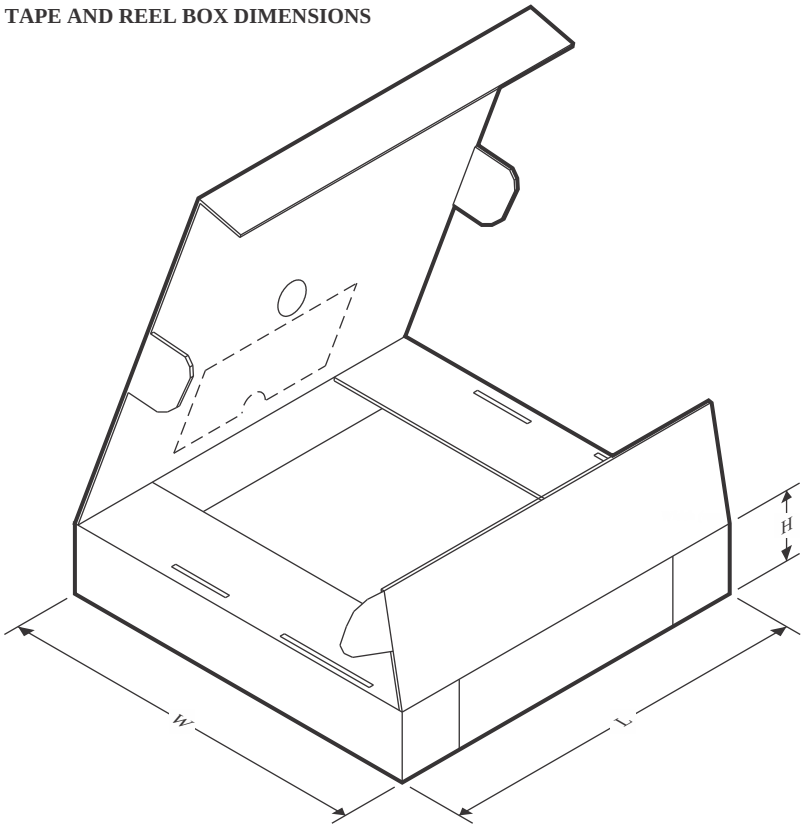

*All dimensions are nominal

Device	Package Type	Package Drawing	Pins	SPQ	Length (mm)	Width (mm)	Height (mm)
TPS65055RSMR	VQFN	RSM	32	3000	353.0	353.0	32.0
TPS65055RSMT	VQFN	RSM	32	250	213.0	191.0	35.0

GENERIC PACKAGE VIEW

RSM 32

VQFN - 1 mm max height

4 x 4, 0.4 mm pitch

PLASTIC QUAD FLATPACK - NO LEAD

This image is a representation of the package family, actual package may vary.
Refer to the product data sheet for package details.

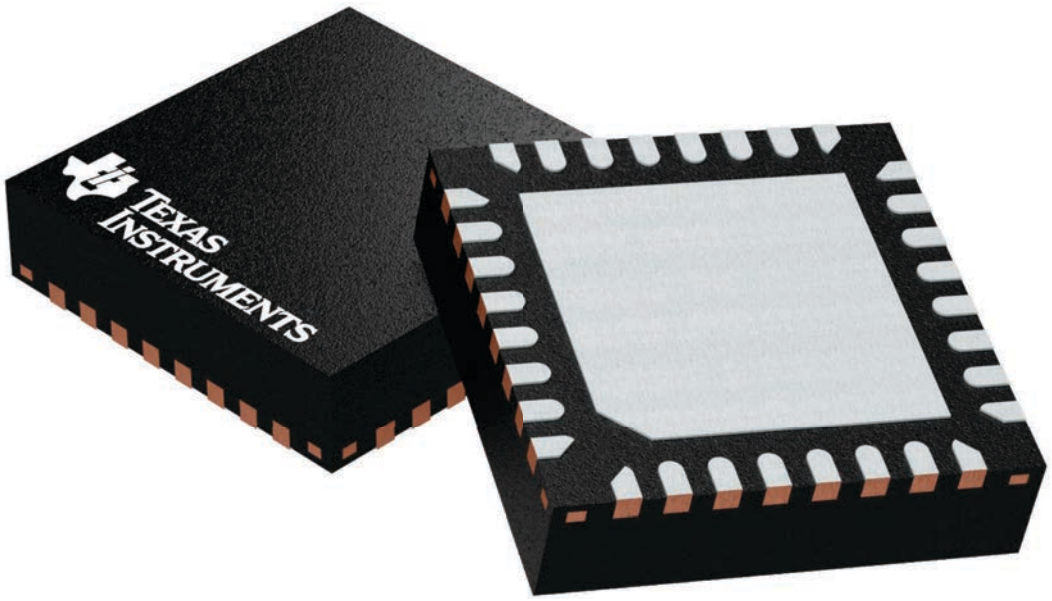

4224982/A

PACKAGE OUTLINE

RSM0032B

VQFN - 1 mm max height

PLASTIC QUAD FLATPACK - NO LEAD

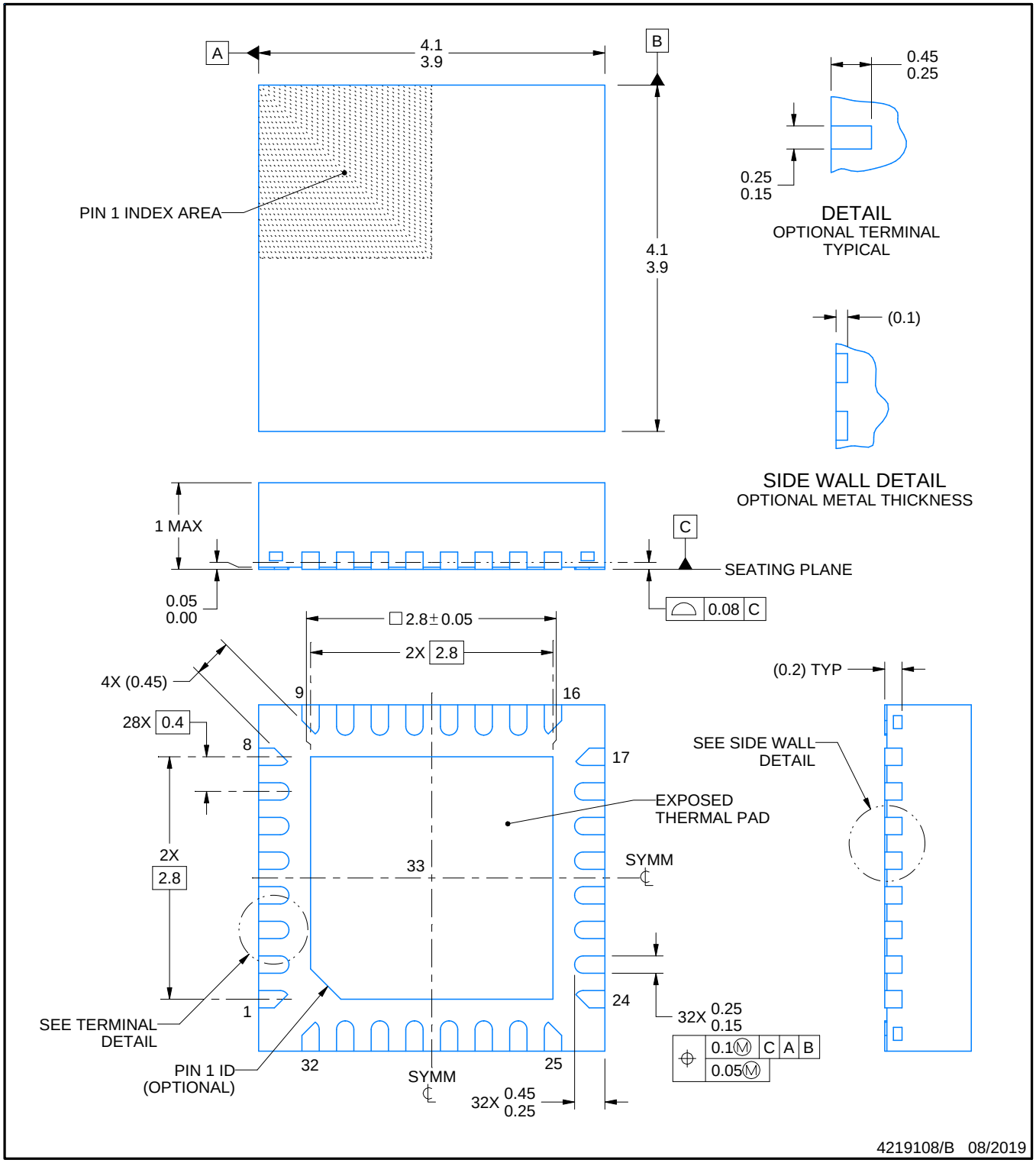

NOTES:

1. All linear dimensions are in millimeters. Any dimensions in parenthesis are for reference only. Dimensioning and tolerancing per ASME Y14.5M.
2. This drawing is subject to change without notice.
3. The package thermal pad must be soldered to the printed circuit board for thermal and mechanical performance.

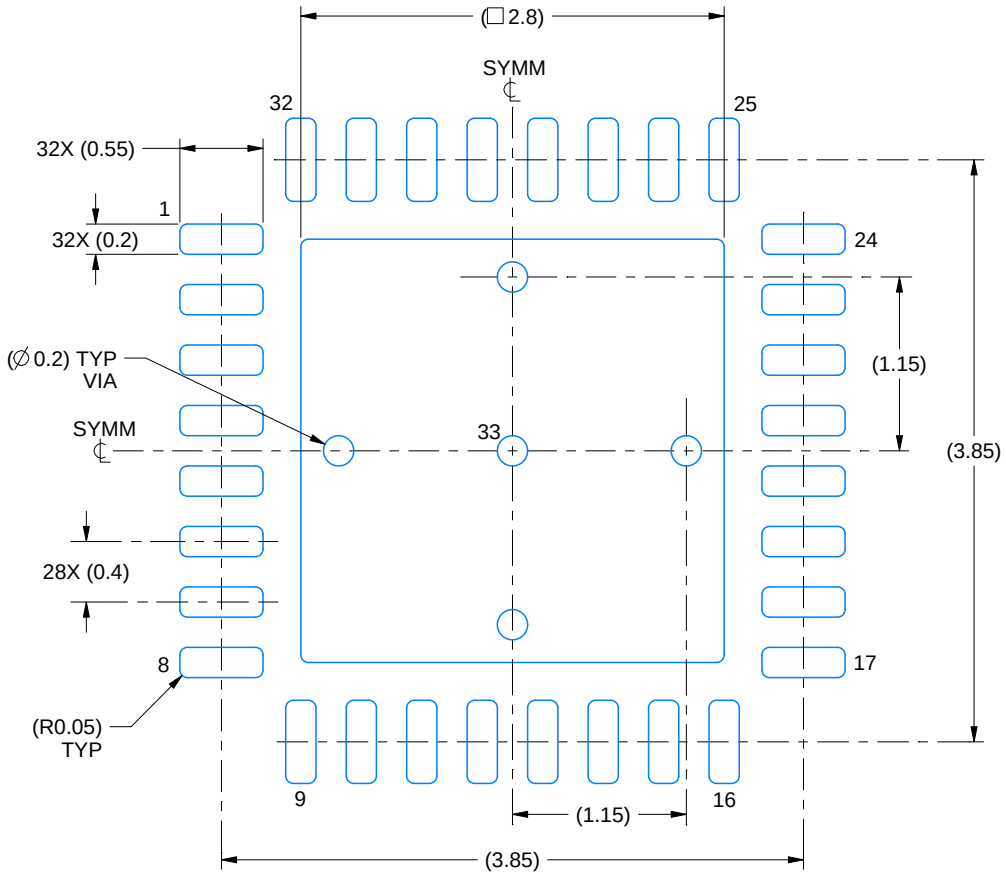

LAND PATTERN EXAMPLE
EXPOSED METAL SHOWN
SCALE:20X

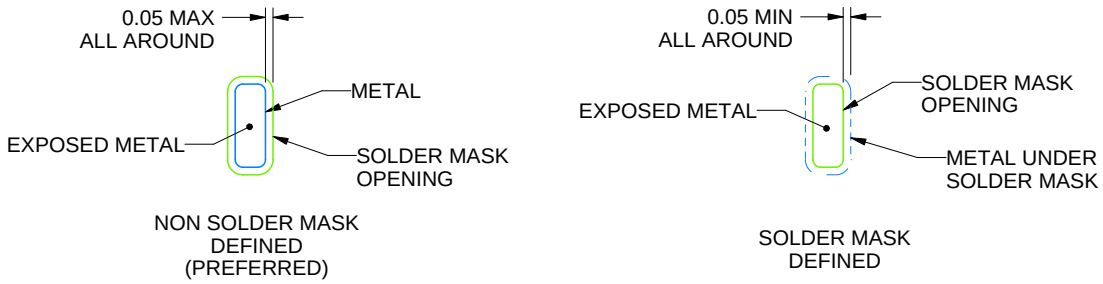

SOLDER MASK DETAILS

4219108/B 08/2019

NOTES: (continued)

4. This package is designed to be soldered to a thermal pad on the board. For more information, see Texas Instruments literature number SLUA271 (www.ti.com/lit/slua271).
5. Vias are optional depending on application, refer to device data sheet. If any vias are implemented, refer to their locations shown on this view. It is recommended that vias under paste be filled, plugged or tented.

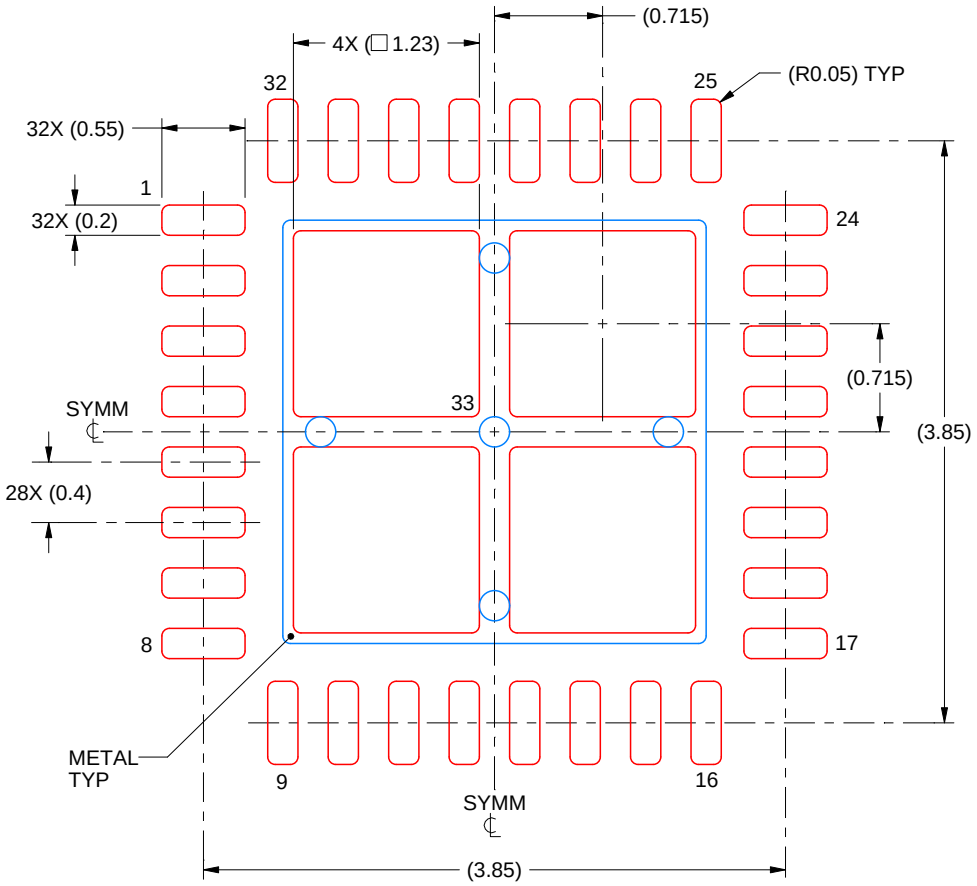

SOLDER PASTE EXAMPLE
BASED ON 0.1 mm THICK STENCIL

EXPOSED PAD 33:
77% PRINTED SOLDER COVERAGE BY AREA UNDER PACKAGE
SCALE:20X

4219108/B 08/2019

NOTES: (continued)

6. Laser cutting apertures with trapezoidal walls and rounded corners may offer better paste release. IPC-7525 may have alternate design recommendations.

IMPORTANT NOTICE AND DISCLAIMER

TI PROVIDES TECHNICAL AND RELIABILITY DATA (INCLUDING DATASHEETS), DESIGN RESOURCES (INCLUDING REFERENCE DESIGNS), APPLICATION OR OTHER DESIGN ADVICE, WEB TOOLS, SAFETY INFORMATION, AND OTHER RESOURCES “AS IS” AND WITH ALL FAULTS, AND DISCLAIMS ALL WARRANTIES, EXPRESS AND IMPLIED, INCLUDING WITHOUT LIMITATION ANY IMPLIED WARRANTIES OF MERCHANTABILITY, FITNESS FOR A PARTICULAR PURPOSE OR NON-INFRINGEMENT OF THIRD PARTY INTELLECTUAL PROPERTY RIGHTS.

These resources are intended for skilled developers designing with TI products. You are solely responsible for (1) selecting the appropriate TI products for your application, (2) designing, validating and testing your application, and (3) ensuring your application meets applicable standards, and any other safety, security, regulatory or other requirements.

These resources are subject to change without notice. TI grants you permission to use these resources only for development of an application that uses the TI products described in the resource. Other reproduction and display of these resources is prohibited. No license is granted to any other TI intellectual property right or to any third party intellectual property right. TI disclaims responsibility for, and you fully indemnify TI and its representatives against any claims, damages, costs, losses, and liabilities arising out of your use of these resources.

TI’s products are provided subject to TI’s Terms of Sale, TI’s General Quality Guidelines, or other applicable terms available either on ti.com or provided in conjunction with such TI products. TI’s provision of these resources does not expand or otherwise alter TI’s applicable warranties or warranty disclaimers for TI products. Unless TI explicitly designates a product as custom or customer-specified, TI products are standard, catalog, general purpose devices.

TI objects to and rejects any additional or different terms you may propose.

Copyright © 2025, Texas Instruments Incorporated

Last updated 10/2025

Looking for pricing, stock, or lifecycle information?

Click below to explore more details on WIN SOURCE:

- View TPS65055RSMR on WIN SOURCE
- Texas Instruments Information

Optimize Your Supply Chain with WIN SOURCE Solutions

- Global Sourcing Solution
- Obsolete Management
- Cost Control Management
- Shortage Management
- Alternative Solution
- Excess Inventory Management