THE DATASHEET OF

TSU6111RSVR

www.win-source.net 0086-755-83957316

SP2T Switch with Impedance Detection Micro-USB Switch to Support USB, UART

Check for Samples: TSU6111

FEATURES

- **Dual SP2T**
  - **USB & UART Path support USB 2.0 High Speed**
- **Smart Detection**
  - **Plug-in/Un-plug Detection**
  - **USB Charger Detection**
  - **Impedance Detection**
  - **Detection is Compatible to CEA-936A (4-Wire Protocol, UART interface)**
- **Charger Detection**
  - **USB BCDv1.1 Compliant**
  - **VBUS Detection**
  - **Data Contact Detection**
  - **Primary and Secondary Detection**
- **Compatible Accessories**
  - **USB Cable**
  - **UART Cable**
  - **USB Charger BCDv1.1**
- **Additional Features**
  - **I^2C Interface with Host Processor**
  - **Support Control Signals Used In Manufacturing (JIG, BOOT)**
  - **Interrupt for Attach and Detach Accessory**
- **Max Voltage**
  - **28v VBUS rating**
- **ESD Performance Tested Per JESD 22**
  - **2000-V Human-Body Model (A114-B, Class II)**
  - **1000-V Charged-Device Model (C101)**
- **ESD Performance DP/DM/ID/VBUS to GND**
  - **±8kV Contact Discharge (IEC 61000-4-2)**
- **Surge Protection on VBUS/DP/DM**
  - **USB Connector Pins Without External Components**

APPLICATIONS

- **Cell Phones and Smart Phones**
- **Tablet PCs**
- **Digital Cameras and Camcorders**
- **GPS Navigation Systems**
- **Micro USB interface with USB/UART**

DESCRIPTION

The TSU6111 is a differential high performance automated SP2T switch with impedance detection. The switch features impedance detection which supports the detection of various accessories that are attached through DP, DM and ID. The charger detection satisfies USB charger specification v1.1. V_{BUS_IN} has 28V tolerance to avoid external protection.

Power for this device is supplied through V_{BAT} of the system or through V_{BUS_IN} when attached.

The switch is controlled by automatic detection logic or through I^2C manually. JIG and BOOT pins are used when a USB, UART JIG cable is used to test in the development and manufacturing. TSU6111 has open-drain JIG output (active low).

QFN-RSV PIN-OUT

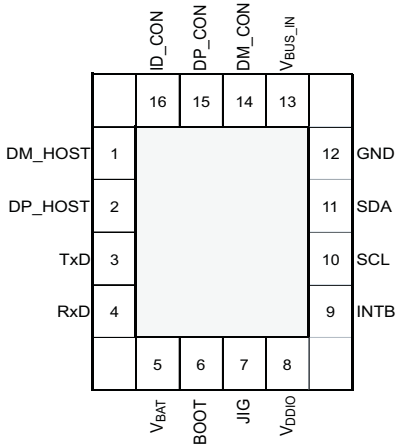

Please be aware that an important notice concerning availability, standard warranty, and use in critical applications of Texas Instruments semiconductor products and disclaimers thereto appears at the end of this data sheet.

PRODUCTION DATA information is current as of publication date. Products conform to specifications per the terms of the Texas Instruments standard warranty. Production processing does not necessarily include testing of all parameters.

Copyright © 2011, Texas Instruments Incorporated

These devices have limited built-in ESD protection. The leads should be shorted together or the device placed in conductive foam during storage or handling to prevent electrostatic damage to the MOS gates.

ORDERING INFORMATION(1)

T_A	PACKAGE(2)		ORDERABLE PART NUMBER	TOP-SIDE MARKING
–40°C to 85°C	uQFN 0.4-mm pitch – RSV	Tape and Reel	TSU6111RSVR	ZTC

(1) For the most current package and ordering information, see the Package Option Addendum at the end of this document, or see the TI Web site at www.ti.com.
(2) Package drawings, thermal data, and symbolization are available at www.ti.com/packaging.

BLOCK DIAGRAM

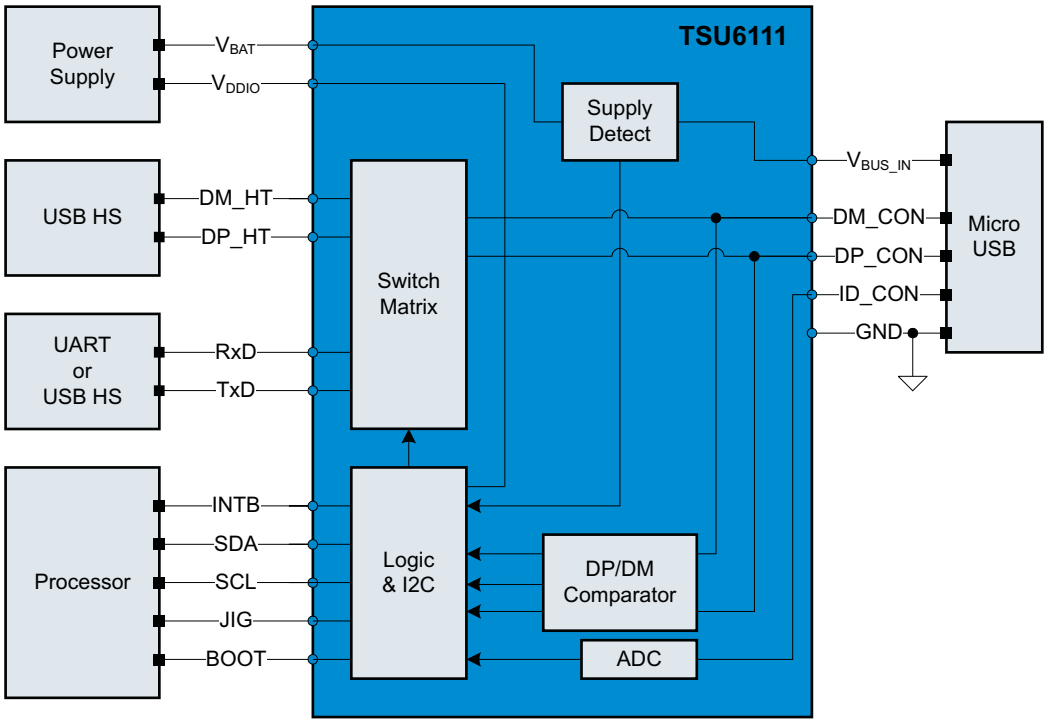

SWITCH MATRIX

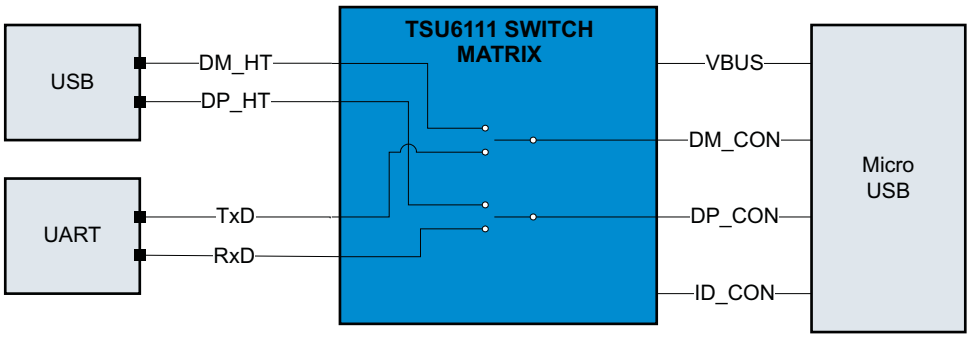

Copyright © 2011, Texas Instruments Incorporated

PIN FUNCTIONS

PIN		I/O	DESCRIPTION
NO.	NAME		
1	DM_HOST	I/O	USB DM connected to host
2	DP_HOST	I/O	USB DP connected to host
3	TxD	I/O	UART Tx
4	RxD	I/O	UART Rx
5	VBAT	I	Connected to battery
6	BOOT	O	BOOT mode out (push-pull)
7	JIG	O	JIG detection (TSU6111 open-drain active low)
8	VDDIO	O	I/O voltage reference
9	INTB	O	Interrupt to host (push-pull)
10	SCL	I	I2C clock
11	SDA	I/O	I2C data
12	GND		Ground
13	VBUS_IN	I	VBUS connected to USB receptacle
14	DM_CON	I/O	USB DM connected to USB receptacle
15	DP_CON	I/O	USB DP connected to USB receptacle
16	ID_CON	I/O	USB ID connected to USB receptacle

SUMMARY OF TYPICAL CHARACTERISTICS

T_A = 25°C	USB Path
Number of channels	2
ON-state resistance (r_{on})	8 Ω
ON-state resistance match (Δr_{on})	0.5 Ω
ON-state resistance flatness ($r_{on(flat)}$)	0.5 Ω
Turn-on/turn-off time (t_{ON}/t_{OFF})	95 µs/ 3.5 µs
Bandwidth (BW)	920 MHz
OFF isolation (O_{ISO})	–26 dB at 250 MHz
Crosstalk (X_{TALK})	–32 dB at 250 MHz
Leakage current ($I_{IO(ON)}$)	50 nA

Copyright © 2011, Texas Instruments Incorporated

ABSOLUTE MAXIMUM RATINGS(1)(2)

over operating free-air temperature range (unless otherwise noted)

			MIN	MAX	UNIT
V_{BUS}	Supply voltage from USB connector		–0.5	28	V
V_{BAT}	Supply voltage from battery		–0.5	6.0	
V_{DDIO}	Logic supply voltage		–0.5	4.6	V
V_{USBIO}	Switch I/O voltage range	USB Switch	–0.5	V_{BAT}+0.5	V
V_{UARTIO}	Switch I/O voltage range	UART Switch	–0.5	V_{BAT}+0.5	V
I_K	Analog port diode current		–50	50	mA
I_{SW-DC}	ON-state continuous switch current		–60	60	mA
I_{SWPEAK}	ON-state peak switch current		–150	150	mA
I_{IK}	Digital logic input clamp current	V_L < 0		–50	mA
I_{LOGIC_O}	Continuous current through logic output		–50	50	mA
I_{GND}	Continuous current through GND			100	mA
T_{stg}	Storage temperature range		–65	150	°C

(1) Stresses above these ratings may cause permanent damage. Exposure to absolute maximum conditions for extended periods may degrade device reliability. These are stress ratings only, and functional operation of the device at these or any other conditions beyond those specified is not implied.
(2) The algebraic convention, whereby the most negative value is a minimum and the most positive value is a maximum.

THERMAL IMPEDANCE RATINGS

				UNIT
θJA	Package thermal impedance	RSV package	184	°C/W

Copyright © 2011, Texas Instruments Incorporated

ELECTRICAL SPECIFICATION

over operating free-air temperature range (unless otherwise noted)

PARAMETERS		TEST CONDITIONS	MIN	MAX	UNIT
DIGITAL SIGNALS – I2C INTERFACE (SCL and SDA)					
V_{DDIO}	Logic and I/O supply voltage		1.65	3.6	V
V_{IH}	High-level input voltage		V_{DDIO} × 0.7	V_{DDIO}	V
V_{IL}	Low-level input voltage		0	V_{DDIO} × 0.3	V
V_{OH}	High-level output voltage	I_{OH} = –3 mA	V_{DDIO} × 0.7		V
V_{OL}	Low-level output voltage	I_{OL} = 3 mA		0.4	V
f_{SCL}	SCL frequency			400	kHz
JIG OUTPUT (TSU6111 – OPEN-DRAIN OUTPUT, ACTIVE LOW)					
V_{OL}	Low-level output voltage	I_{OL} = 10 mA, V_{BAT} = 3.0 V		0.5	V
INTB AND BOOT (PUSH-PULL OUTPUT)					
V_{OH}	High-level output voltage	I_{OH} = –4 mA , V_{DDIO} = 1.65 V	1.16		V
V_{OL}	Low-level output voltage	I_{OL} = 4 mA , V_{DDIO} = 1.65 V		0.33	V
TOTAL SWITCH CURRENT CONSUMPTION					
$I_{DD(Standby)}$	V_{BAT} Standby current consumption	V_{BUS_IN} = 0 V, Idle state		30	µA
$I_{DD(Operating)}$	V_{BAT} Operating current consumption	V_{BUS_IN} = 0 V, USB switches ON		75	µA

ELECTRICAL CHARACTERISTICS(1)

VBAT = 3 V to 4.4 V, VDDIO = 2.8 V, TA = –40°C to 85°C (unless otherwise noted)

PARAMETER			TEST CONDITIONS	MIN	TYP	MAX	UNIT
ANALOG SWITCH							
V_{USBIO}	Analog signal range			0		V_{BAT}	V
r_{ON}	ON-state resistance	DM_HT, DP_HT, DM_CON, DP_CON	V_I = 0 V to 3.6 V, I_O = –2 mA, V_{BAT} = 3.0 V		8	15	Ω
Δr_{ON}	ON-state resistance match between channels	DM_HT, DP_HT, DM_CON, DP_CON	V_I = 0.4 V, I_O = –2 mA, V_{BAT} = 3.0 V		0.5	2	Ω
$r_{ON(flat)}$	ON-state resistance flatness	DM_HT, DP_HT, DM_CON, DP_CON	V_I = 0 V to 3.6 V, I_O = –2 mA, V_{BAT} = 3.0 V		0.5	2	Ω
$I_{IO(OFF)}$	V_I or V_O OFF leakage current		V_I = 0.3 V, V_O = 2.7 V or V_I = 2.7 V, V_O = 0.3 V, V_{BAT} = 4.4 V, Switch OFF		45	200	nA
$I_{IO(ON)}$	V_O ON leakage current		V_I = OPEN, V_O = 0.3 V or 2.7 V, V_{BAT} = 4.4 V, Switch ON		50	200	nA
DYNAMIC							
t_{ON}	Turn-ON time	From receipt of I^2C ACK bit	V_I or V_O = V_{BAT}, R_L = 50 Ω, C_L = 35 pF		95		µs
t_{OFF}	Turn-OFF time	From receipt of I^2C ACK bit	V_I or V_O = V_{BAT}, RL = 50 Ω, C_L = 35 pF		3.5		µs
$C_{I(OFF)}$	V_I OFF capacitance		DC bias = 0 V or 3.6 V, f = 10 MHz, Switch OFF		4		pF
$C_{O(OFF)}$	V_O OFF capacitance		DC bias = 0 V or 3.6 V, f = 10 MHz, Switch OFF		7		pF
$C_{I(ON)}$, $C_{O(ON)}$	V_I, V_O ON capacitance		DC bias = 0 V or 3.6 V, f = 10 MHz, Switch ON		9		pF
BW	Bandwidth		R_L = 50 Ω, Switch ON		920		MHz
O_{ISO}	OFF Isolation		f = 240 MHz, R_L = 50 Ω, Switch OFF		–26		dB
X_{TALK}	Crosstalk		f = 240 MHz, R_L = 50 Ω		–32		dB

(1) V_O is equal to the asserted voltage on DP_CON and DM_CON pins. V_I is equal to the asserted voltage on DP_HT and DM_HT pins. I_O is equal to the current on the DP_CON and DM_CON pins. I_I is equal to the current on the DP_HT and DM_HT pins.

Copyright © 2011, Texas Instruments Incorporated

GENERAL OPERATION

The TSU6111 will automatically detect accessories plugged into the phone via the mini/micro USB 5 pin connector. The type of accessory detected will be stored in I2C registers within the TSU6111 for retrieval by the host. The TSU6111 has a network of switches that can be automatically opened and closed base on the accessory detection. See the Table 1 for details of which switches are open during each mode of operation. For flexibility, the TSU6111 also offers a manual switching mode allowing the host processor to decide which switches should be opened and closed and execute the settings through the I^2C interface.

STANDBY MODE

Standby mode is the default mode upon power up and occurs when no accessory has been detected. During this mode, the VBUS and ID lines are continually monitored through comparators to determine when an accessory is inserted. Power consumption is minimal during standby mode.

EYE DIAGRAM USB 2.0 HIGH SPEED

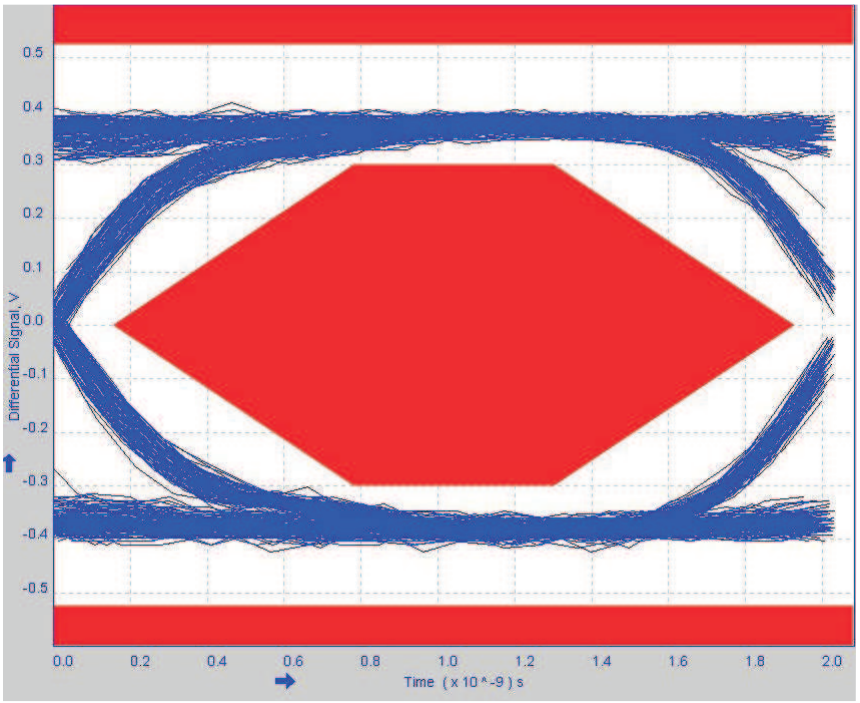

Copyright © 2011, Texas Instruments Incorporated

ACCESSORY ID DETECTION

If V_{BUS_IN} is high and the attachment is not a charger, then determine the impedance on the ID pin. If V_{BUS_IN} is low and an accessory is attached, then use an ADC for impedance sensing on the ID pin to identify which accessory is attached.

IMPEDANCE BUCKETS FOR EACH ACCESSORY

In order to implement ID detection, each accessory should contain below ID impedance resistor value which is 5% tolerance accuracy.

Table 1. Accessory ID and Switch States

ACCCESSORY	DETECTED IMPEDANCE ON ID	RESISTOR TOLERANCE (%)	ADC VALUE	SWITCH STATE		FACTORY CABLE	
				DP/DM		JIG	BOOT
				USB	UART		
OTG	0	—	00000	ON	OFF	OFF	OFF
Send_End Button	2K	10%	00001	OFF	OFF	OFF	OFF
Audio Device Type 3	28.7K	5%	01110	OFF	OFF	OFF	OFF
Reserved Accessory #1	34K	5%	01111	OFF	OFF	OFF	OFF
Reserved Accessory #2	40.2K	5%	10000	OFF	OFF	OFF	OFF
Reserved Accessory #3	49.9K	5%	10001	OFF	OFF	OFF	OFF
Reserved Accessory #4	64.9K	5%	10010	OFF	OFF	OFF	OFF
Audio Device Type 2	80.27K	5%	10011	OFF	ON	OFF	OFF
Phone Powered Device	102K	5%	10100	OFF	ON	OFF	OFF
TTY Converter	121K	5%	10101	OFF	OFF	OFF	OFF
UART Cable	150K	5%	10110	OFF	ON	OFF	OFF
Type 1 Charger	200K	5%	10111	OFF	OFF	OFF	OFF
Factory Mode Cable - Boot Off USB	255K	5%	11000	ON	OFF	ON	OFF
Factory Mode Cable - Boot On USB	301K	5%	11001	ON	OFF	ON	ON
Audio/Video Cable	365K	5%	11010	OFF	OFF	OFF	OFF
Type 2 Charger	442K	5%	11011	OFF	OFF	OFF	OFF
Factory Mode Cable - Boot Off UART	523K	5%	11100	OFF	ON	ON	OFF
Factory Mode Cable - Boot On UART	619K	5%	11101	OFF	ON	ON	ON
Stereo Headset with Remote	1000.07K	10%	11110	OFF	OFF	OFF	OFF
Mono/Stereo Headset	1002K	10%	11110	OFF	OFF	OFF	OFF
No ID	—	—	11111	OFF	OFF	OFF	OFF
USB Standard Downstream Port	—	—	11111	ON	OFF	OFF	OFF
USB Charging Downstream Port	—	—	11111	ON	OFF	OFF	OFF
Dedicated Charging Port	—	—	11111	OFF	OFF	OFF	OFF

Copyright © 2011, Texas Instruments Incorporated

Power-On Reset

When power (from 0 V) is applied to VBAT, an internal power-on reset holds the TSU6111 in a reset condition until V_{BAT} has reached V_{POR}. At that point, the reset condition is released, and the TSU6111 registers and I2C state machine initialize to their default states.

After the initial power-up phase, VBAT must be lowered to below 0.2 V and then back up to the operating voltage (V_{DDIO}) for a power-reset cycle.

Software Reset

The TSU6111 has software reset feature.

- Hold low both I^2C_SCL and I^2C_SDA more than 30ms will reset digital logic of the TSU6111.

After reset digital logic, INTB will keep low until INT_Mask bit of Control register (0x02) is cleared.

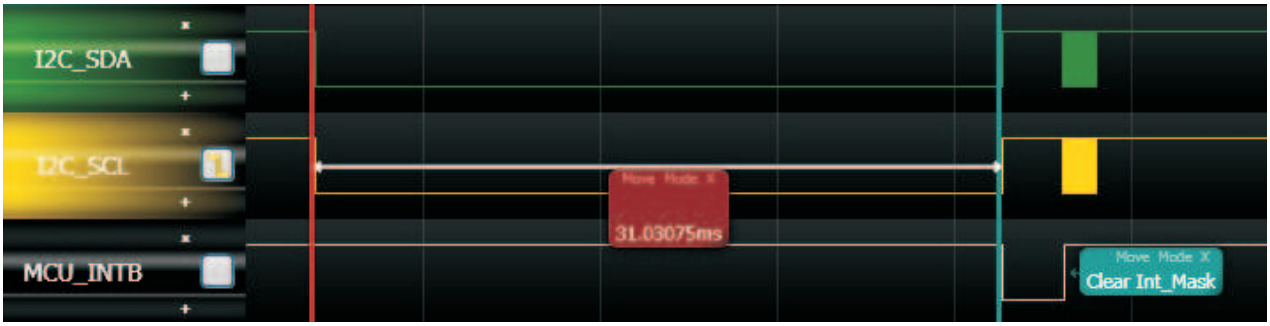

Figure 1. Software Reset

Copyright © 2011, Texas Instruments Incorporated

Standard I2C Interface Details

The bidirectional I^2C bus consists of the serial clock (SCL) and serial data (SDA) lines. Both lines must be connected to a positive supply via a pull-up resistor when connected to the output stages of a device. Data transfer may be initiated only when the bus is not busy.

I^2C communication with this device is initiated by the master sending a START condition, a high-to-low transition on the SDA input/output while the SCL input is high (see Figure 2). After the start condition, the device address byte is sent, MSB first, including the data direction bit (R/W). This device does not respond to the general call address. After receiving the valid address byte, this device responds with an ACK, a low on the SDA input/output during the high of the ACK-related clock pulse.

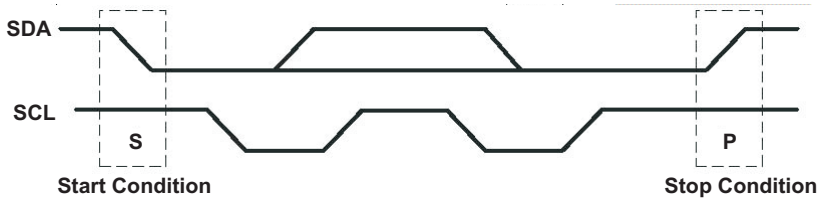

Figure 2. Definition of Start and Stop Conditions

The data byte follows the address ACK. The R/W bit is kept low for transfer from the master to the slave. The data byte is followed by an ACK sent from this device. Data are output only if complete bytes are received and acknowledged. The output data is valid at time (tpv) after the low-to-high transition of SCL, during the clock cycle for the ACK.

On the I^2C bus, only one data bit is transferred during each clock pulse. The data on the SDA line must remain stable during the high pulse of the clock period, as changes in the data line at this time are interpreted as control commands (START or STOP) (see Figure 3).

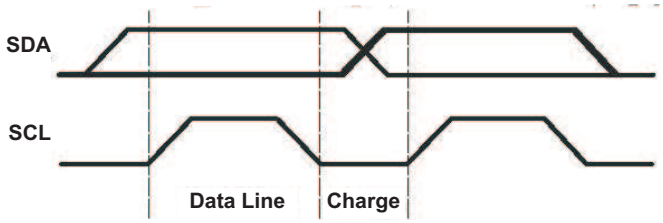

Figure 3. Bit Transfer

A Stop condition, a low-to-high transition on the SDA input/output while the SCL input is high, is sent by the master (see Figure 2).

The number of data bytes transferred between the start and the stop conditions from transmitter to receiver is not limited. Each byte of eight bits is followed by one ACK bit. The transmitter must release the SDA line before the receiver can send an ACK bit.

A slave receiver that is addressed must generate an ACK after the reception of each byte. The device that acknowledges has to pull down the SDA line during the ACK clock pulse so that the SDA line is stable low during the high pulse of the ACK-related clock period (see Figure 4). Setup and hold times must be taken into account.

Copyright © 2011, Texas Instruments Incorporated

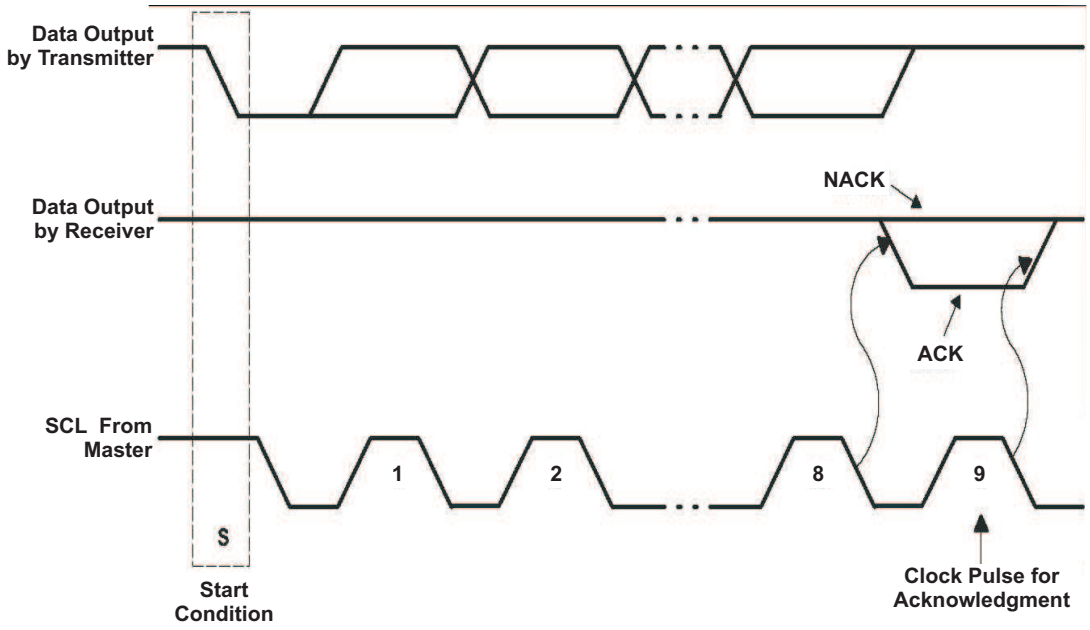

Figure 4. Acknowledgment on I²C Bus

Writes

Data is transmitted to the TSU6111 by sending the device slave address and setting the LSB to a logic 0 (see Figure 5 for device address). The command byte is sent after the address and determines which register receives the data that follows the command byte. The next byte is written to the specified register on the rising edge of the ACK clock pulse.

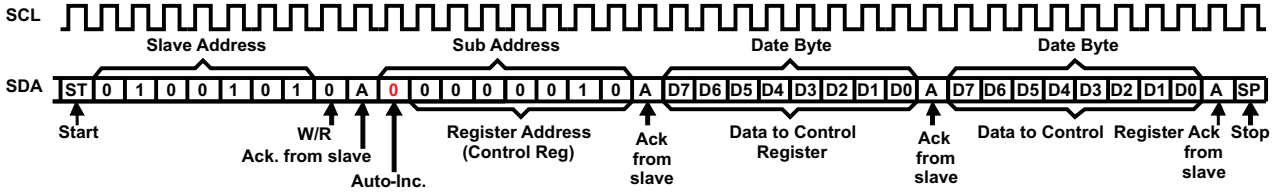

Figure 5. Repeated Data Write to a Single Register

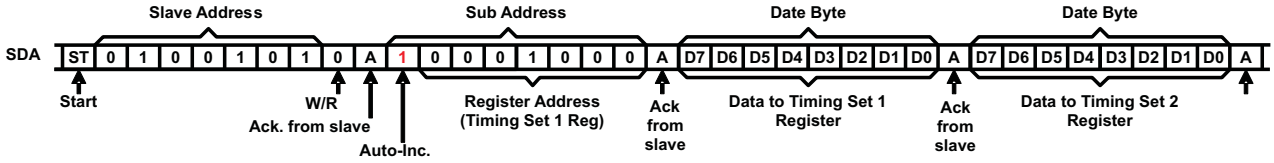

Figure 6. Burst Data Write to Multiple Registers

Copyright © 2011, Texas Instruments Incorporated

Reads

The bus master first must send the TSU6111 slave address with the LSB set to logic 0. The command byte is sent after the address and determines which register is accessed. After a restart, the device slave address is sent again but, this time, the LSB is set to logic 1. Data from the register defined by the command byte then is sent by the TSU6111. Data is clocked into the SDA output shift register on the rising edge of the ACK clock pulse. See Figure 7.

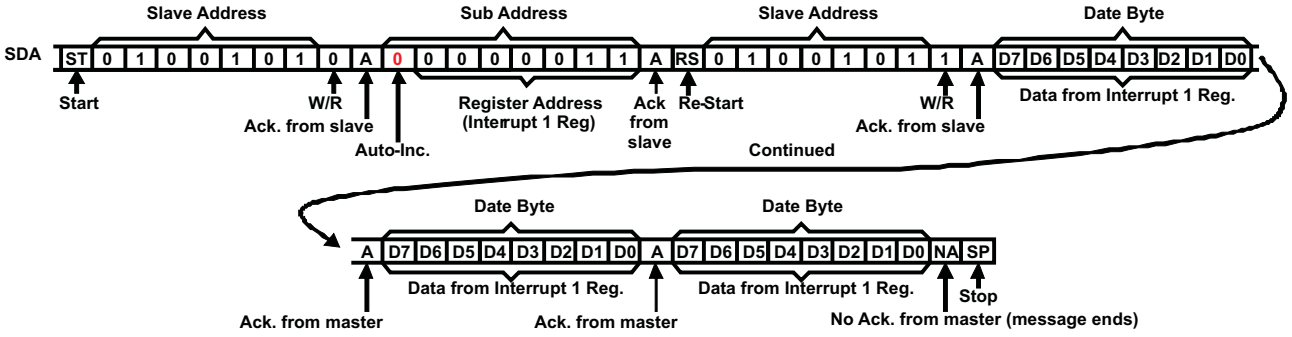

Figure 7. Repeated Data Read from a Single Register – Combined Mode

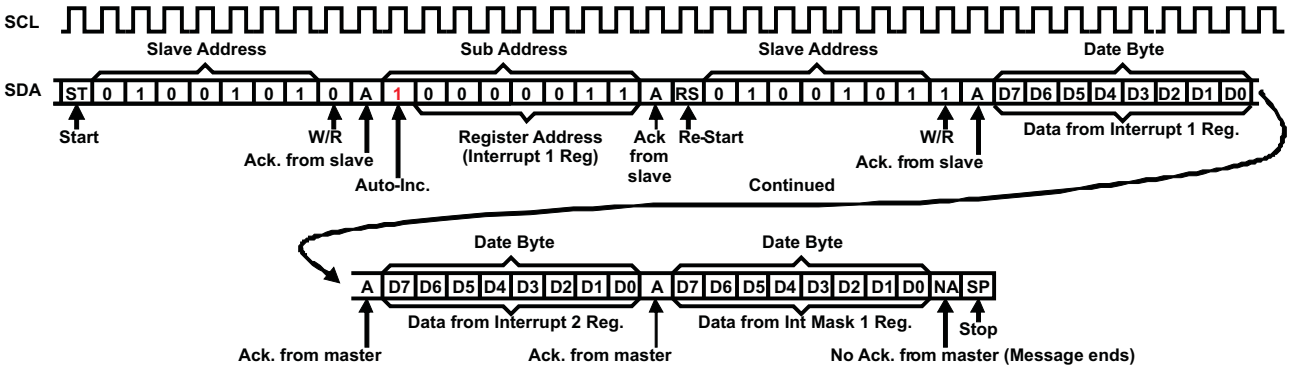

Figure 8. Burst Data Read from Multiple Registers – Combined Mode

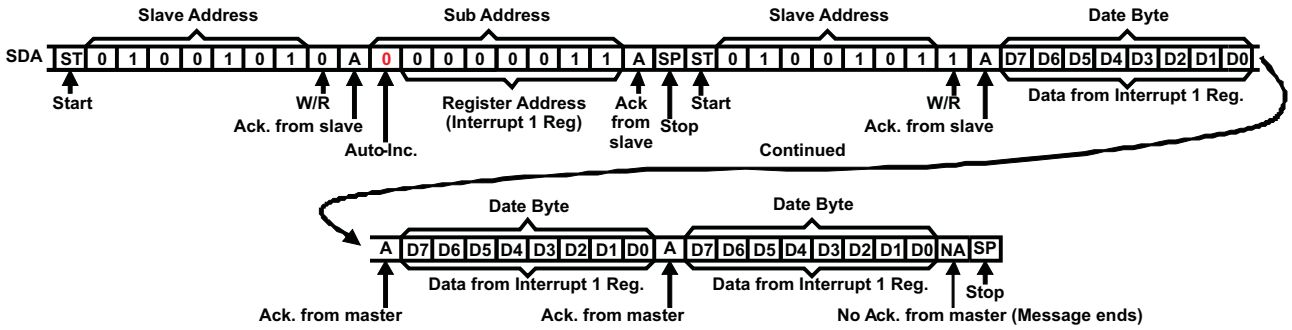

Figure 9. Repeated Data Read from a Single Register – Split Mode

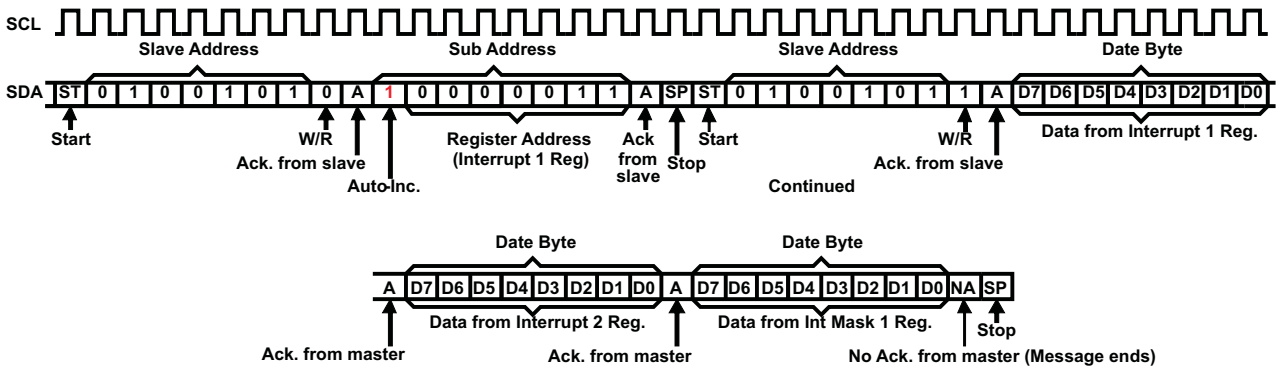

Figure 10. Burst Data Read from Multiple Registers – Split Mode

Notes (Applicable to Figure 5–Figure 10):

- SDA is pulled low on Ack. from slave or Ack. from master.
- Register writes always require sub-address write before first data byte.
- Repeated data writes to a single register continue indefinitely until Stop or Re-Start.
- Repeated data reads from a single register continue indefinitely until No Ack. from master.
- Burst data writes start at the specified register address, then advance to the next register address, even to the read-only registers. For these registers, data write appears to occur, though no data are changed by the writes. After register 14h is written, writing resumes to register 01h and continues until Stop or Re-Start.
- Burst data reads start at the specified register address, then advance to the next register address. Once register 14h is read, reading resumes from register 01h and continues until No Ack. from master.

Copyright © 2011, Texas Instruments Incorporated

I²C Register Map(1)(2)(3)

ADDR	REGISTER	TYPE	RESET VALUE	BIT7	BIT6	BIT5	BIT4	BIT3	BIT2	BIT1	BIT0
01h	Device ID	R	00001010	Version ID					Vendor ID		
02h	Control	R/W	xxx11111				Switch Open	Raw Data	Manual S/W	Wait	INT Mask
03h	Interrupt 1	R	00000000	OVP_OCP_DIS	OCP_EN	OVP_EN	LKR	LKP	KP	Detach	Attach
04h	Interrupt 2	R	x0000000		OTP_EN	CONNECT	Stuck_Key_RCV	Stuck_Key	ADC_Change	Reserved_Attach	A/V_Charging
05h	Interrupt Mask 1	R/W	00000000	OVP_OCP_DIS	OCP_EN	OVP_EN	LKR	LKP	KP	Detach	Attach
06h	Interrupt Mask 2	R/W	x0000000		OTP_EN	CONNECT	Stuck_Key_RCV	Stuck_Key	ADC_Change	Reserved_Attach	A/V_Charging
07h	ADC	R	xxx11111				ADC Value				
08h	Timing Set 1	R/W	00000000					Device Wake Up			
09h	Timing Set 2	R/W	00000000	Switching Wait							
0Ah	Device Type 1	R	00000000	USG OTG	DCP	CDP	Carkit	UART	USG	Audio Type2	Audio Type1
0Bh	Device Type 2	R	00000000	Audio Type3	CHG A/V	TTY	PD	JIG_UART_OFF	JIG_UART_ON	JIG_USB_OFF	JIG_USB_ON
0Ch	Button 1	R	00000000	7	6	5	4	3	2	1	Send_End
0Dh	Button 2	R	x0000000		Unknown	Error	12	11	10	9	8
13h	Manual S/W 1	R/W	000000xx	D– Switching							
14h	Manual S/W 2	R/W	xxxx00xx					BOOT_SW	JIG-ON		

(1) Do not use blank register bits.
(2) Write “0” to the blank register bits.
(3) Values read from the blank register bits are not defined and invalid.

Slave Address

NAME	SIZE (BITS)	DESCRIPTION							
		BIT 7	BIT 6	BIT 5	BIT 4	BIT 3	BIT 2	BIT 1	BIT 0
Slave address	8	0	1	0	0	1	0	1	R/W

Device ID

Address: 01h
Reset Value: 00001010
Type: Read

BIT NO.	NAME	SIZE (BITS)	DESCRIPTION
0-2	Vendor ID	3	A unique number for vendor 010 for Texas Instruments
3-7	Version ID	5	A unique number for chip version 00001b for TSU6111

Control

Address: 02h
Reset Value: xxx11111
Type: Read/Write

BIT NO.	NAME	SIZE (BITS)	DESCRIPTION
0	INT Mask	1	0: Unmask interrupt 1: Mask interrupt
1	Wait	1	0: Wait until host re-sets this bit(WAIT bit) high 1: Wait until Switching timer is expired
2	Manual S/W	1	0: Manual Switching 1: Automatic Switching
3	RAW Data	1	0: Report the status changes on ID to Host 1: Don't report the status changes on ID
4	Switch Open	1	0: Open all Switches 1: Automatic Switching by accessory status
5-7	Reserved		

Copyright © 2011, Texas Instruments Incorporated

Interrupt 1
Address: 03h
Reset Value: 00000000
Type: Read and Clear

BIT NO.	NAME	SIZE (BITS)	DESCRIPTION
0	Attach	1	1: Accessory is attached
1	Detach	1	1: Accessory is detached
2	KP	1	1: Key press
3	LKP	1	1: Long key press
4	LKR	1	1: Long key release
5	OVP_EN	1	1: OVP enabled
6	OCP_EN	1	1: OCP enabled
7	OVP_OCP_DIS	1	1: OCP_OCP disabled

Interrupt 2
Address: 04h
Reset Value:x0000000
Type: Read and Clear

BIT NO.	NAME	SIZE (BITS)	DESCRIPTION
0	A/V_Charging	1	1: Charger detected when A/V cable is attached
1	Reserved_Attach	1	1: Reserved Device is attached
2	ADC_Change	1	1: ADC value is changed when RAW data is enabled
3	Stuck_Key	1	1: Stuck Key is detected
4	Stuck_Key_RCV	1	1: Stuck Key is recovered
5	Connect	1	1: Switch is connected(closed)
6	OTP_EN	1	1: Over Temperature Protection enabled
7	Reserved		

Copyright © 2011, Texas Instruments Incorporated

Interrupt Mask 1

Address: 05h
Reset Value:00000000
Type: Read/Write

BIT NO.	NAME	SIZE (BITS)	DESCRIPTION
0	Attach	1	0: Unmask Attach Interrupt 1: Mask Attach Interrupt
1	Detach	1	0: Unmask Key press Interrupt 1: Mask Detach Interrupt
2	KP	1	0: Unmask Key press Interrupt 1: Mask Key press Interrupt
3	LKP	1	0: Unmask Long key press Interrupt 1: Mask Long key press Interrupt
4	LKR	1	0: Unmask Long key release Interrupt 1: Mask Long key release Interrupt
5	OVP_EN	1	0: Unmask OVP_EN Interrupt 1: Mask OVP_EN Interrupt
6	OCP_EN	1	0: Unmask OCP_EN Interrupt 1: Mask OCP_EN Interrupt
7	OVP_OCP_DIS	1	0: Unmask OVP_OCP_DIS Interrupt 1: Mask OVP_OCP_DIS Interrupt

Interrupt Mask 2

Address: 06h
Reset Value:x0000000
Type: Read/Write

BIT NO.	NAME	SIZE (BITS)	DESCRIPTION
0	A/V_Charging	1	0: Unmask A/V_Charging Interrupt 1: Mask A/V_Charging Interrupt
1	Reserved_Attach	1	0: Unmask Reserved_Attach Interrupt 1: Mask Reserved_Attach Interrupt
2	ADC_Change	1	0: Unmask ADC_Change Interrupt 1: Mask ADC_Change Interrrupt
3	Stuck_Key	1	0: Unmask Stuck_Key Interrupt 1: Mask Stuck_Key Interrupt
4	Stuck_Key_RCV	1	0: Unmask Stuck_Key_RCV Interrupt 1: Mask Stuck_Key_RCV Interrupt
5	Connect	1	0: Unmask Connect Interrupt 1: Mask Connect Interrupt
6	OTP_EN	1	0: Unmask OTP_EN Interrupt 1: Mask OTP_EN Interrupt
7	Reserved	1	

ADC Value

Address: 07h
Reset Value: xxx11111
Type: Read

BIT NO.	NAME	SIZE (BITS)	DESCRIPTION
0-4	AD value	5	ADC value read from ID
53-7	Reserved	3	

Copyright © 2011, Texas Instruments Incorporated

Timing Set 1

Address: 08h
Reset Value: 00000000
Type: Read/Write

BIT NO.	NAME	SIZE (BITS)	DESCRIPTION
0-3	Device Wake Up	4	Device wake up duration
4-7	Reserved	4	

Timing Set 2

Address: 09h
Reset Value: 00000000
Type: Read/Write

BIT NO.	NAME	SIZE (BITS)	DESCRIPTION
0-3	Reserved	4	
4-7	Switching wait	4	Waiting duration before switching

Time Table(1)

SETTING VALUE	DEVICE WAKE UP	SWITCHING WAIT
0000	50 ms	10 ms
0001	100 ms	30 ms
0010	150 ms	50 ms
0011	200 ms	70 ms
0100	300 ms	90 ms
0101	400 ms	110 ms
0110	500 ms	130 ms
0111	600 ms	150 ms
1000	700 ms	170 ms
1001	800 ms	190 ms
1010	900 ms	210 ms
1011	1000 ms	–
1100	–	–
1101	–	–
1110	–	–
1111	–	–

(1) Maximum variation of these timing is ±20%

Copyright © 2011, Texas Instruments Incorporated

Device Type 1

Address: 0Ah
Reset Value: 00000000
Type: Read

BIT NO.	NAME	SIZE (BITS)	DESCRIPTION
0	Audio type 1	1	Audio device type 1
1	Audio type 2	1	Audio device type 2
2	USB	1	USB host
3	UART	1	UART
4	Carkit	1	Carkit Charger Type 1 or 2
5	CDP	1	Charging Downstream Port (USB Host Hub Charger)
6	DCP	1	Dedicated Charging Port
7	USB OTG	1	USB on-the-go device

Device Type 2

Address: 0Bh
Reset Value:x0000000
Type: Read

BIT NO.	NAME	SIZE (BITS)	DESCRIPTION
0	JIG_USB_ON	1	Factory mode cable
1	JIG_USB_OFF	1	Factory mode cable
2	JIG_UART_ON	1	Factory mode cable
3	JIG_UART_OFF	1	Factory mode cable
4	PPD	1	Phone-powered device
5	TTY	1	TTY converter
6	A/V	1	A/V cable
7	Audio type 3	1	Audio device type 3

Button 1

Address: 0Ch
Reset Value: 00000000
Type: Read and Clear

BIT NO.	NAME	SIZE (BITS)	DESCRIPTION
0	8	1	Send_End key is pressed
1	9	1	Number 1 key is pressed
2	10	1	Number 2 key is pressed
3	11	1	Number 3 key is pressed
4	12	1	Number 4 key is pressed
5	Error	1	Number 5 key is pressed
6	Unknown	1	Number 6 key is pressed
7	Reserved	1	Number 7 key is pressed

Copyright © 2011, Texas Instruments Incorporated

Button 2
Address: 0Dh
Reset Value:x0000000
Type: Read and Clear

BIT NO.	NAME	SIZE (BITS)	DESCRIPTION
0	Send_End	1	Number 8 key is pressed
1	1	1	Number 9 key is pressed
2	2	1	Number 10 key is pressed
3	3	1	Number 11 key is pressed
4	4	1	Number 12 key is pressed
5	5	1	Error key is pressed
6	6	1	Unknown key is pressed
7	7	1	

Manual S/W 1
Address: 13h
Reset Value: 000000xx
Type: Read/Write

BIT NO.	NAME	SIZE (BITS)	DESCRIPTION
0-1	Unused	2	
2-4	D+ Switching	3	000: Open all switch 001: D+ is connected to D+ of USB port 010: Open all switch 011: D+ is connected to RxD of UART
5-7	D– Switching	3	000: Open all switch 001: D– is connected to D– of USB port 010: Open all switch 011: D– is connected to TxD of UART

Manual S/W 2
Address: 14h
Reset Value: xxxx00xx
Type: Read/Write

BIT NO.	NAME	SIZE (BITS)	DESCRIPTION
0-1	Unused	2	
2	JIG	1	TSU6111: 0: High Impedance 1: GND
3	BOOT	1	0: Low 1: High
4-7	Unused	4	

Copyright © 2011, Texas Instruments Incorporated

PACKAGING INFORMATION

Orderable Device	Status (1)	Package Type	Package Drawing	Pins	Package Qty	Eco Plan (2)	Lead/Ball Finish (6)	MSL Peak Temp (3)	Op Temp (°C)	Device Marking (4/5)	Samples
TSU6111RSVR	ACTIVE	UQFN	RSV	16	3000	Green (RoHS & no Sb/Br)	CU NIPDAU	Level-1-260C-UNLIM	-40 to 85	ZTC	Samples

(1) The marketing status values are defined as follows:
ACTIVE: Product device recommended for new designs.
LIFEBUY: TI has announced that the device will be discontinued, and a lifetime-buy period is in effect.
NRND: Not recommended for new designs. Device is in production to support existing customers, but TI does not recommend using this part in a new design.
PREVIEW: Device has been announced but is not in production. Samples may or may not be available.
OBSOLETE: TI has discontinued the production of the device.

(2) Eco Plan - The planned eco-friendly classification: Pb-Free (RoHS), Pb-Free (RoHS Exempt), or Green (RoHS & no Sb/Br) - please check http://www.ti.com/productcontent for the latest availability information and additional product content details.
TBD: The Pb-Free/Green conversion plan has not been defined.
Pb-Free (RoHS): TI's terms "Lead-Free" or "Pb-Free" mean semiconductor products that are compatible with the current RoHS requirements for all 6 substances, including the requirement that lead not exceed 0.1% by weight in homogeneous materials. Where designed to be soldered at high temperatures, TI Pb-Free products are suitable for use in specified lead-free processes.
Pb-Free (RoHS Exempt): This component has a RoHS exemption for either 1) lead-based flip-chip solder bumps used between the die and package, or 2) lead-based die adhesive used between the die and leadframe. The component is otherwise considered Pb-Free (RoHS compatible) as defined above.
Green (RoHS & no Sb/Br): TI defines "Green" to mean Pb-Free (RoHS compatible), and free of Bromine (Br) and Antimony (Sb) based flame retardants (Br or Sb do not exceed 0.1% by weight in homogeneous material)

(3) MSL, Peak Temp. - The Moisture Sensitivity Level rating according to the JEDEC industry standard classifications, and peak solder temperature.

(4) There may be additional marking, which relates to the logo, the lot trace code information, or the environmental category on the device.

(5) Multiple Device Markings will be inside parentheses. Only one Device Marking contained in parentheses and separated by a "~" will appear on a device. If a line is indented then it is a continuation of the previous line and the two combined represent the entire Device Marking for that device.

(6) Lead/Ball Finish - Orderable Devices may have multiple material finish options. Finish options are separated by a vertical ruled line. Lead/Ball Finish values may wrap to two lines if the finish value exceeds the maximum column width.

Important Information and Disclaimer: The information provided on this page represents TI's knowledge and belief as of the date that it is provided. TI bases its knowledge and belief on information provided by third parties, and makes no representation or warranty as to the accuracy of such information. Efforts are underway to better integrate information from third parties. TI has taken and continues to take reasonable steps to provide representative and accurate information but may not have conducted destructive testing or chemical analysis on incoming materials and chemicals. TI and TI suppliers consider certain information to be proprietary, and thus CAS numbers and other limited information may not be available for release.

In no event shall TI's liability arising out of such information exceed the total purchase price of the TI part(s) at issue in this document sold by TI to Customer on an annual basis.

TAPE AND REEL INFORMATION

REEL DIMENSIONS

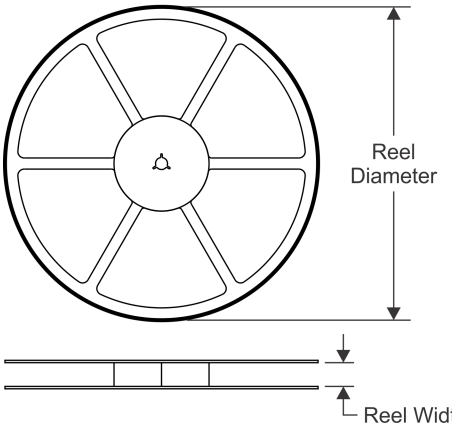

TAPE DIMENSIONS

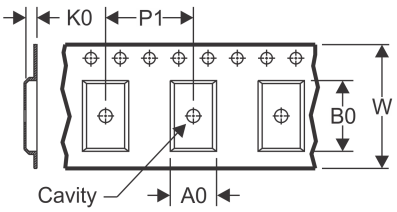

A0	Dimension designed to accommodate the component width
B0	Dimension designed to accommodate the component length
K0	Dimension designed to accommodate the component thickness
W	Overall width of the carrier tape
P1	Pitch between successive cavity centers

QUADRANT ASSIGNMENTS FOR PIN 1 ORIENTATION IN TAPE

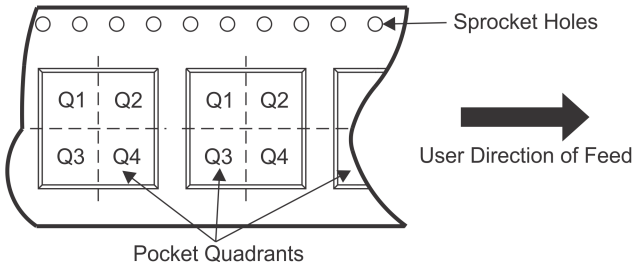

*All dimensions are nominal

Device	Package Type	Package Drawing	Pins	SPQ	Reel Diameter (mm)	Reel Width W1 (mm)	A0 (mm)	B0 (mm)	K0 (mm)	P1 (mm)	W (mm)	Pin1 Quadrant
TSU6111RSVR	UQFN	RSV	16	3000	177.8	12.4	2.0	2.8	0.7	4.0	12.0	Q1

TAPE AND REEL BOX DIMENSIONS

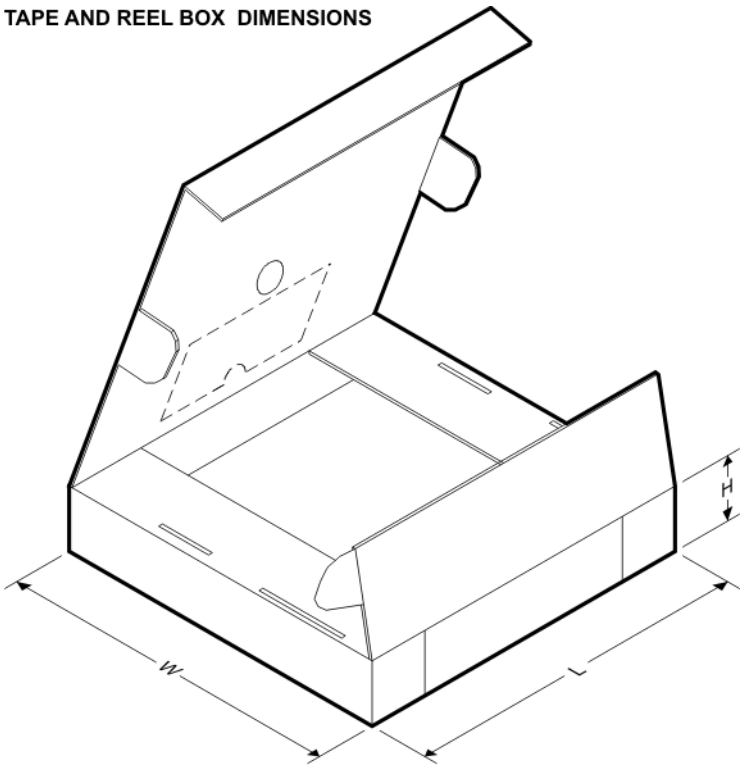

*All dimensions are nominal

Device	Package Type	Package Drawing	Pins	SPQ	Length (mm)	Width (mm)	Height (mm)
TSU6111RSVR	UQFN	RSV	16	3000	202.0	201.0	28.0

PACKAGE OUTLINE

RSV0016A

UQFN - 0.55 mm max height

ULTRA THIN QUAD FLATPACK - NO LEAD

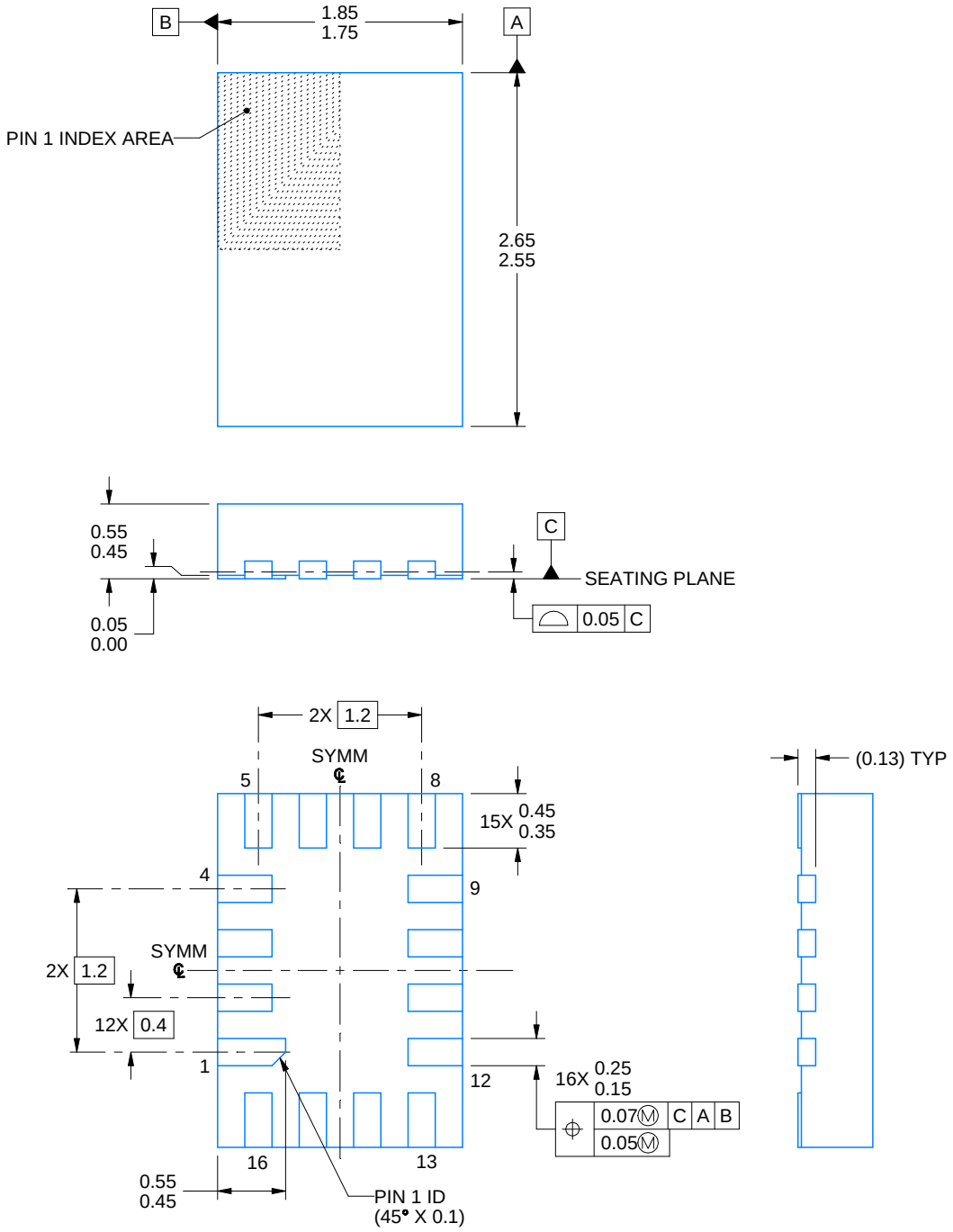

NOTES:

1. All linear dimensions are in millimeters. Any dimensions in parenthesis are for reference only. Dimensioning and tolerancing per ASME Y14.5M.
2. This drawing is subject to change without notice.

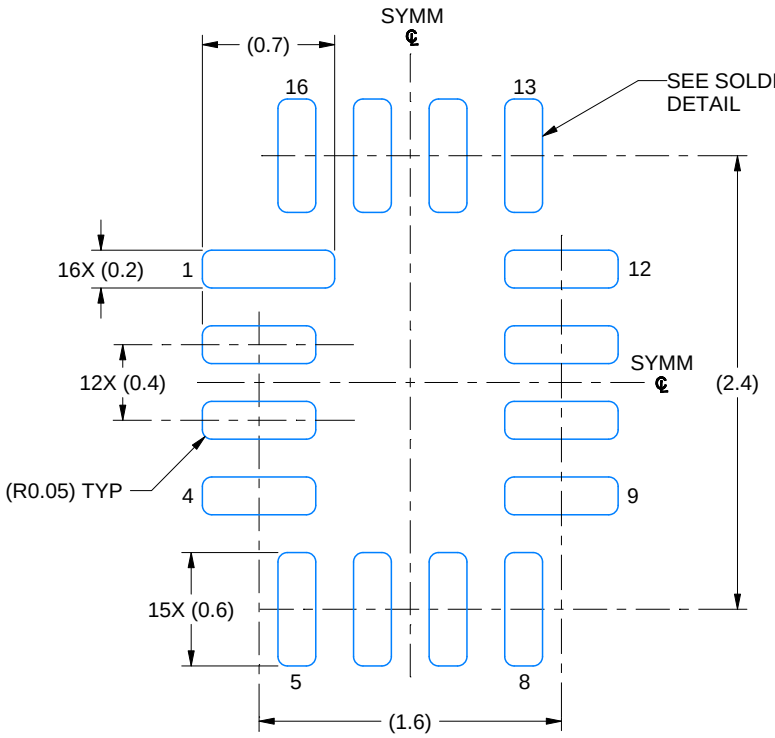

LAND PATTERN EXAMPLE
EXPOSED METAL SHOWN
SCALE: 25X

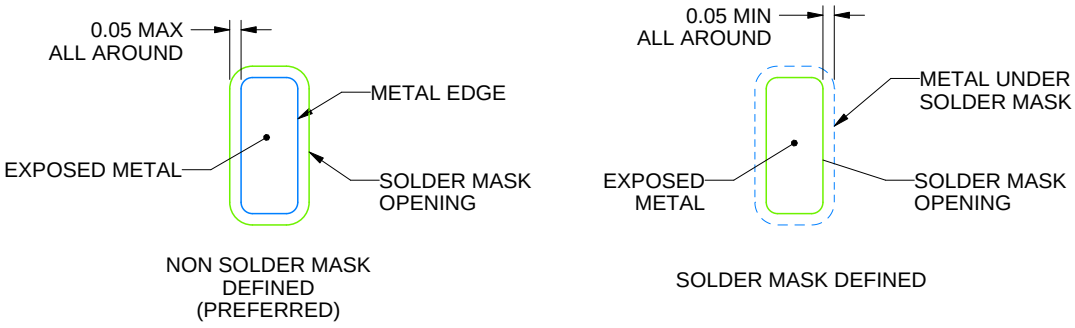

SOLDER MASK DETAILS

4220314/B 05/2019

NOTES: (continued)

3. This package is designed to be soldered to a thermal pad on the board. For more information, see Texas Instruments literature number SLUA271 (www.ti.com/lit/slua271).

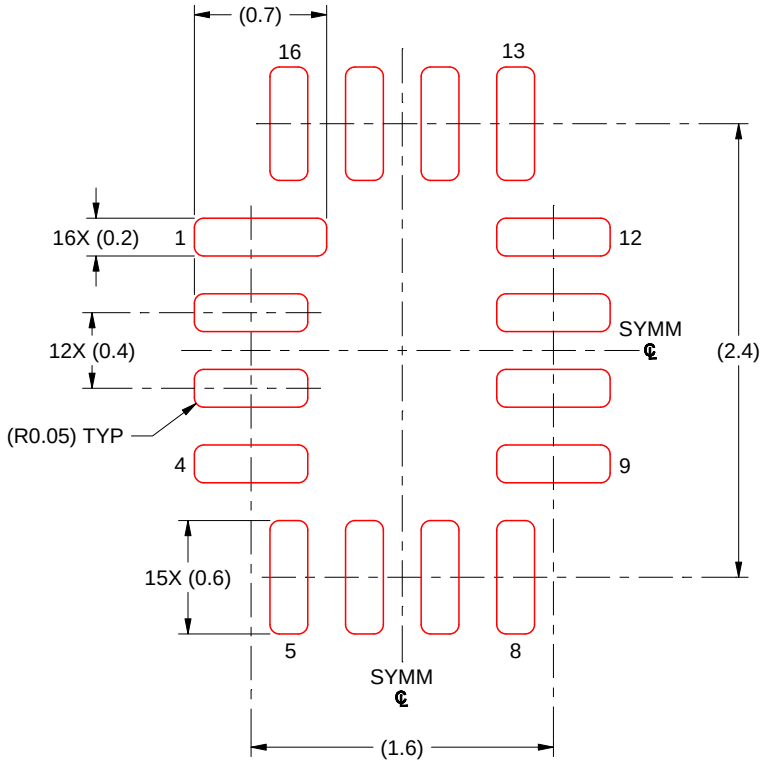

SOLDER PASTE EXAMPLE
BASED ON 0.125 MM THICK STENCIL
SCALE: 25X

4220314/B 05/2019

NOTES: (continued)

4. Laser cutting apertures with trapezoidal walls and rounded corners may offer better paste release. IPC-7525 may have alternate design recommendations.

IMPORTANT NOTICE AND DISCLAIMER

TI PROVIDES TECHNICAL AND RELIABILITY DATA (INCLUDING DATASHEETS), DESIGN RESOURCES (INCLUDING REFERENCE DESIGNS), APPLICATION OR OTHER DESIGN ADVICE, WEB TOOLS, SAFETY INFORMATION, AND OTHER RESOURCES “AS IS” AND WITH ALL FAULTS, AND DISCLAIMS ALL WARRANTIES, EXPRESS AND IMPLIED, INCLUDING WITHOUT LIMITATION ANY IMPLIED WARRANTIES OF MERCHANTABILITY, FITNESS FOR A PARTICULAR PURPOSE OR NON-INFRINGEMENT OF THIRD PARTY INTELLECTUAL PROPERTY RIGHTS.

These resources are intended for skilled developers designing with TI products. You are solely responsible for (1) selecting the appropriate TI products for your application, (2) designing, validating and testing your application, and (3) ensuring your application meets applicable standards, and any other safety, security, or other requirements. These resources are subject to change without notice. TI grants you permission to use these resources only for development of an application that uses the TI products described in the resource. Other reproduction and display of these resources is prohibited. No license is granted to any other TI intellectual property right or to any third party intellectual property right. TI disclaims responsibility for, and you will fully indemnify TI and its representatives against, any claims, damages, costs, losses, and liabilities arising out of your use of these resources.

TI’s products are provided subject to TI’s Terms of Sale (www.ti.com/legal/termsofsale.html) or other applicable terms available either on ti.com or provided in conjunction with such TI products. TI’s provision of these resources does not expand or otherwise alter TI’s applicable warranties or warranty disclaimers for TI products.

Mailing Address: Texas Instruments, Post Office Box 655303, Dallas, Texas 75265
Copyright © 2019, Texas Instruments Incorporated

Looking for pricing, stock, or lifecycle information?

Click below to explore more details on WIN SOURCE:

- View TSU6111RSVR on WIN SOURCE
- Texas Instruments Information

Optimize Your Supply Chain with WIN SOURCE Solutions

- Global Sourcing Solution
- Obsolete Management
- Cost Control Management
- Shortage Management
- Alternative Solution
- Excess Inventory Management