THE DATASHEET OF

DG9263DY-T1-E3

www.win-source.net 0086-755-83957316

Low-Voltage Dual SPST Analog Switch

DESCRIPTION

The DG9262, DG9263 is a single-pole/single-throw monolithic CMOS analog device designed for high performance switching of analog signals. Combining low power, high speed (t_{ON}: 35 ns, t_{OFF}: 20 ns), low on-resistance ($R_{DS(on)}$: 40 Ω) and small physical size, the DG9262, DG9263 is ideal for portable and battery powered applications requiring high performance and efficient use of board space.

The DG9262, DG9263 is built on Vishay Siliconix's low voltage BCD-15 process. Minimum ESD protection, per Method 3015.7 is 2000 V. An epitaxial layer prevents latchup. Break-before make is guaranteed for DG9262, DG9263.

Each switch conducts equally well in both directions when on, and blocks up to the power supply level when off.

BENEFITS

- Reduced Power Consumption
- Simple Logic Interface
- High Accuracy
- Reduce Board Space

FEATURES

- **Halogen-free According to IEC 61249-2-21 Definition**
- Low Voltage Operation (- 2.7 V to 5 V)
- Low On-Resistance - $R_{DS(on)}$: 40 Ω
- Fast Switching - t_{ON}: 35 ns, t_{OFF}: 20 ns
- Low Leakage - $I_{COM(on)}$: 200-pA max.
- Low Charge Injection - Q_{INJ}: 1 pC
- Low Power Consumption
- TTL/CMOS Compatible
- ESD Protection > 2000 V (Method 3015.7)
- Available in MSOP-8 and SOIC-8
- **Compliant to RoHS Directive 2002/95/EC**

Pb-free Available
RoHS* COMPLIANT
HALOGEN FREE

APPLICATIONS

- Battery Operated Systems
- Portable Test Equipment
- Sample and Hold Circuits
- Cellular Phones
- Communication Systems
- Military Radio
- PBX, PABX Guidance and Control Systems

FUNCTIONAL BLOCK DIAGRAM AND PIN CONFIGURATION

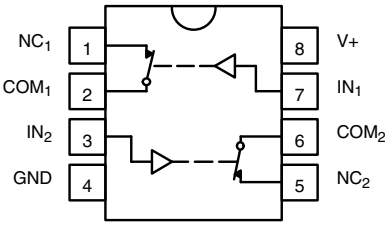

Top View

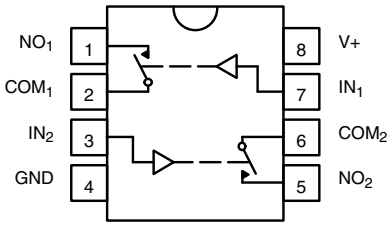

Top View

TRUTH TABLE - DG9262	
Logic	**Switch**
0	On
1	Off

Logic "0" ≤ 0.8 V
Logic "1" ≥ 2.4 V

TRUTH TABLE - DG9263	
Logic	**Switch**
0	Off
1	On

Logic "0" ≤ 0.8 V
Logic "1" ≥ 2.4 V

ORDERING INFORMATION

Temp Range	Package	Part Number
- 40 °C to 85 °C	SOIC-8	DG9262DY-E3 DG9262DY-T1 DG9262DY-T1-E3
		DG9263DY-E3 DG9263DY-T1 DG9263DY-T1-E3
	MSOP-8	DG9262DQ-T1-E3
		DG9263DQ-T1-E3

* Pb containing terminations are not RoHS compliant, exemptions may apply

This document is subject to change without notice.
THE PRODUCTS DESCRIBED HEREIN AND THIS DOCUMENT ARE SUBJECT TO SPECIFIC DISCLAIMERS, SET FORTH AT www.vishay.com/doc?91000

ABSOLUTE MAXIMUM RATINGS

Parameter		Limit	Unit
Reference V+ to GND		- 0.3 to + 13	V
IN, COM, NC, NO[a]		- 0.3 to (V+ + 0.3)	
Continuous Current (Any Terminal)		± 20	mA
Peak Current (Pulsed at 1 ms, 10 % duty cycle)		± 40	
ESD (Method 3015.7)		> 2000	V
Storage Temperature (D Suffix)		- 65 to 125	°C
Power Dissipation (Packages)[b]	8-Pin Narrow Body SOIC[c]	400	mW

Notes:
a. Signals on S_X, D_X, or IN_X exceeding V+ or V- will be clamped by internal diodes. Limit forward diode current to maximum current ratings.
b. All leads welded or soldered to PC Board.
c. Derate 6.5 mW/°C above 75 °C.

SPECIFICATIONS (V+ = 3 V)

Parameter	Symbol	Test Conditions Unless Otherwise Specified V+ = 3 V, ± 10 %, V_{IN} = 0.8 V or 2.4 V[e]	Temp.[a]	D Suffix - 40 °C to 85 °C Min.[b]	Typ.[c]	Max.[b]	Unit
Analog Switch							
Analog Signal Range[d]	V_{ANALOG}		Full	0		3	V
Drain-Source On-Resistance	$R_{DS(on)}$	V_{NO} or V_{NC} = 1.5 V, V+ = 2.7 V I_{COM} = 5 mA	Room Full		50	80 140	Ω
$R_{DS(on)}$ Match[d]	$\Delta R_{DS(on)}$	V_{NO} or V_{NC} = 1.5 V	Room		0.4	2	
$R_{DS(on)}$ Flatness[d]	$R_{DS(on)}$ Flatness	V_{NO} or V_{NC} = 1 and 2 V	Room		4	8	
NO or NC Off Leakage Current[g]	$I_{NO/NC(off)}$	V_{NO} or V_{NC} = 1 V/2 V, V_{COM} = 2 V/1 V	Room Full	- 100 - 5000	5	100 5000	pA
COM Off Leakage Current[g]	$I_{COM(off)}$	V_{COM} = 1 V/2 V, V_{NO} or V_{NC} = 2 V/1 V	Room Full	- 100 - 5000	5	100 5000	
Channel-On Leakage Current[g]	$I_{COM(on)}$	V_{COM} = V_{NO} or V_{NC} = 1 V/2 V	Room Full	- 200 - 10 000	10	200 10 000	
Digital Control							
Input Current	I_{INL} or I_{INH}		Full		1		µA
Dynamic Characteristics							
Turn-On Time	t_{ON}	V_{NO} or V_{NC} = 1.5 V	Room Full		50	120 200	ns
Turn-Off Time	t_{OFF}		Room Full		20	50 120	
Charge Injection[d]	Q_{INJ}	C_L = 1 nF, V_{GEN} = 0 V, R_{GEN} = 0 Ω	Room		1	5	pC
Off-Isolation	OIRR	R_L = 50 Ω, C_L = 5 pF, f = 1 MHz	Room		- 74		dB
Crosstalk	X_{TALK}		Room		- 90		
NC and NO Capacitance	$C_{(off)}$	f = 1 MHz	Room		7		pF
Channel-On Capacitance	$C_{COM(on)}$		Room		20		
COM-Off Capacitance	$C_{COM(off)}$		Room		13		
Power Supply							
Power Supply Range	V+			2.7		12	V
Power Supply Current	I+	V+ = 3.3 V, V_{IN} = 0 V or 3.3 V				1	µA

Notes:
a. Room = 25 °C, full = as determined by the operating suffix.
b. The algebraic convention whereby the most negative value is a minimum and the most positive a maximum, is used in this data sheet.
c. Typical values are for design aid only, not guaranteed nor subject to production testing.
d. Guarantee by design, nor subjected to production test.
e. V_{IN} = input voltage to perform proper function.
f. Difference of min and max values.
g. Gurauranteed by 5 V leakage testing, not production tested.

This document is subject to change without notice.
THE PRODUCTS DESCRIBED HEREIN AND THIS DOCUMENT ARE SUBJECT TO SPECIFIC DISCLAIMERS, SET FORTH AT www.vishay.com/doc?91000

SPECIFICATIONS (V+ = 5 V)							
Parameter	**Symbol**	**Test Conditions Unless Otherwise Specified** V+ = 5 V, ± 10 %, V_{IN} = 0.8 V or 2.4 V[e]	**Temp.[a]**	**D Suffix - 40 °C to 85 °C** **Min.[b]**	**Typ.[c]**	**Max.[b]**	**Unit**
Analog Switch							
Analog Signal Range[d]	V_{ANALOG}		Full	0		5	V
Drain-Source On-Resistance	$R_{DS(on)}$	V_{NO} or V_{NC} = 3.5 V, V+ = 4.5 V I_{COM} = 5 mA	Room Full		30	60 75	Ω
$R_{DS(on)}$ Match[d]	$\Delta R_{DS(on)}$	V_{NO} or V_{NC} = 3.5 V	Room		0.4	2	
$R_{DS(on)}$ Flatness[f]	$R_{DS(on)}$ Flatness	V_{NO} or V_{NC} = 1, 2 and 3 V	Room		2	6	
NO or NC Off Leakage Current	$I_{NO/NC(off)}$	V_{NO} or V_{NC} = 1 V/4 V, V_{COM} = 4 V/1 V	Room Full	- 100 - 5000	10	100 5000	pA
COM Off Leakage Current	$I_{COM(off)}$	V_{COM} = 1 V/4 V, V_{NO} or V_{NC} = 4 V/1 V	Room Full	- 100 - 5000	10	100 5000	
Channel-On Leakage Current	$I_{COM(on)}$	V_{COM} = V_{NO} or V_{NC} = 1 V/4 V	Room Full	- 200 - 10 000		200 10 000	
Digital Control							
Input Current	I_{INL} or I_{INH}		Full		1		µA
Dynamic Characteristics							
Turn-On Time	t_{ON}	V_{NO} or V_{NC} = 3 V	Room Full		35	75 150	ns
Turn-Off Time	t_{OFF}		Room Full		20	50 100	
Charge Injection[d]	Q_{INJ}	C_L = 1 nF, V_{GEN} = 0 V, R_{GEN} = 0 Ω	Room		2	5	pC
Off-Isolation	OIRR	R_L = 50 Ω, C_L = 5 pF, f = 1 MHz	Room		- 74		dB
Crosstalk	X_{TALK}		Room		- 90		
NC and NO Capacitance	$C_{(off)}$	f = 1 MHz	Room		7		pF
Channel-On Capacitance	$C_{D(on)}$		Room		20		
COM-Off Capacitance	$C_{COM(off)}$		Room		13		
Power Supply							
Power Supply Range	V+			2.7		12	V
Power Supply Current	I+	V+ = 5.5 V, V_{IN} = 0 V or 5.5 V				1	µA

Notes:
a. Room = 25 °C, full = as determined by the operating suffix.
b. The algebraic convention whereby the most negative value is a minimum and the most positive a maximum, is used in this data sheet.
c. Typical values are for design aid only, not guaranteed nor subject to production testing.
d. Guarantee by design, nor subjected to production test.
e. V_{IN} = input voltage to perform proper function.
f. Difference of min and max values.

Stresses beyond those listed under "Absolute Maximum Ratings" may cause permanent damage to the device. These are stress ratings only, and functional operation of the device at these or any other conditions beyond those indicated in the operational sections of the specifications is not implied. Exposure to absolute maximum rating conditions for extended periods may affect device reliability.

This document is subject to change without notice.
THE PRODUCTS DESCRIBED HEREIN AND THIS DOCUMENT ARE SUBJECT TO SPECIFIC DISCLAIMERS, SET FORTH AT www.vishay.com/doc?91000

TYPICAL CHARACTERISTICS (25°C, unless otherwise noted)

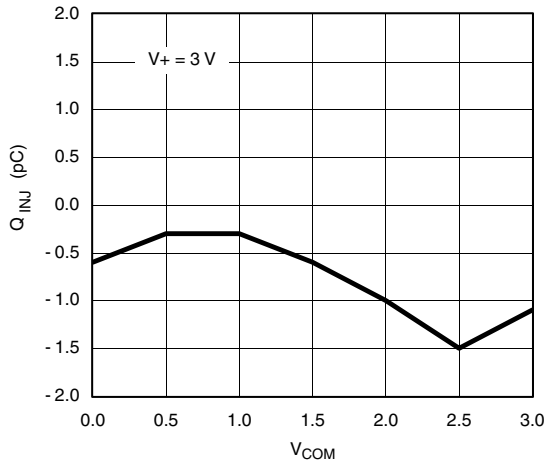

Charge Injection

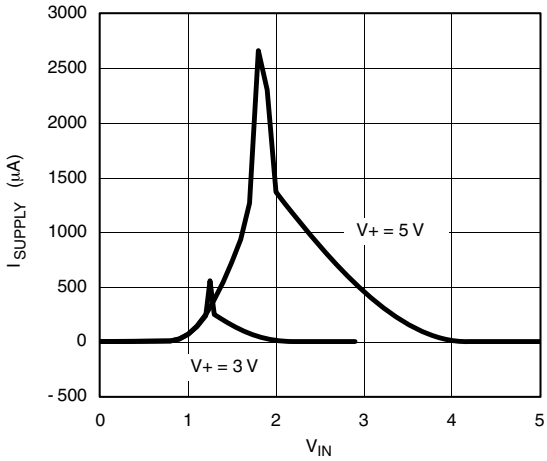

Supply Current vs. V_{IN}

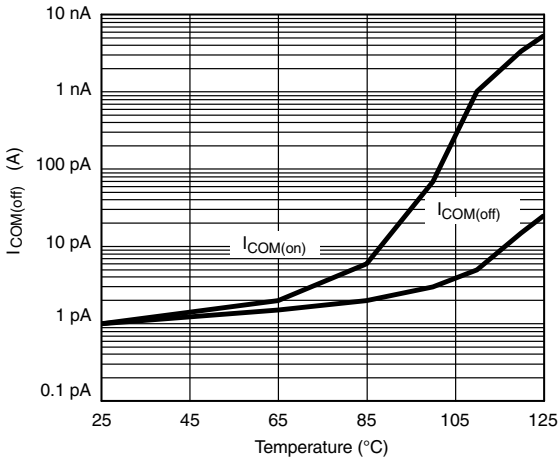

Leakage Current vs. Temperature

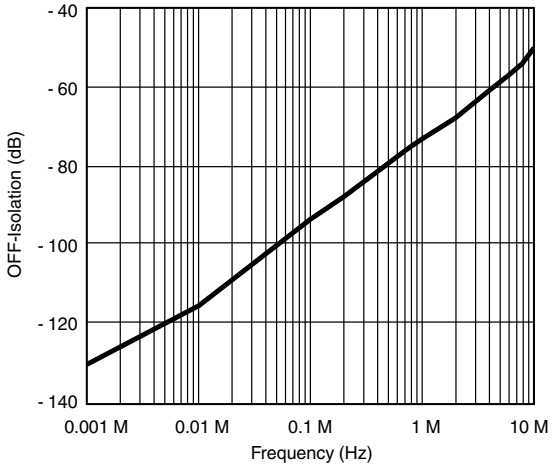

Off-Isolation vs. Frequency

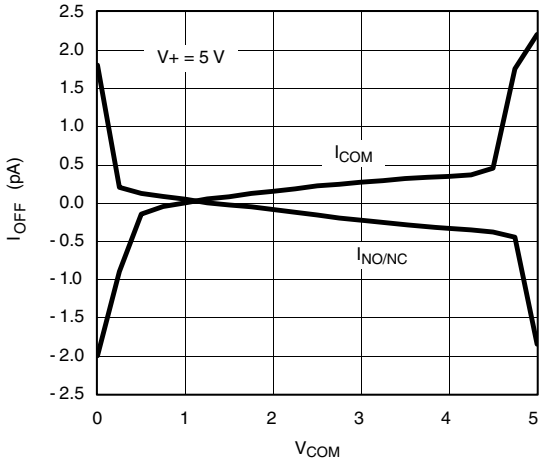

Off-Leakage vs. Voltage at 25 °C

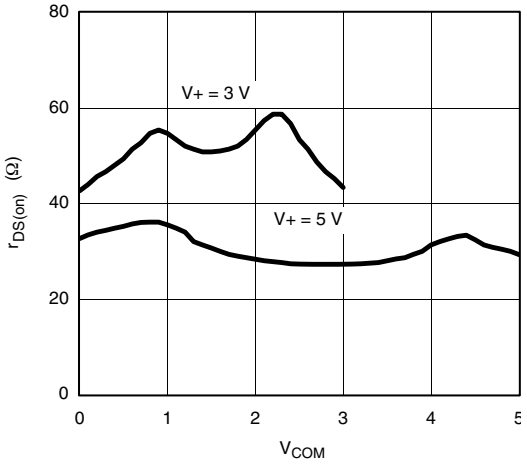

R_{DS} vs. V_{COM}

This document is subject to change without notice.
THE PRODUCTS DESCRIBED HEREIN AND THIS DOCUMENT ARE SUBJECT TO SPECIFIC DISCLAIMERS, SET FORTH AT www.vishay.com/doc?91000

TYPICAL CHARACTERISTICS (25°C, unless otherwise noted)

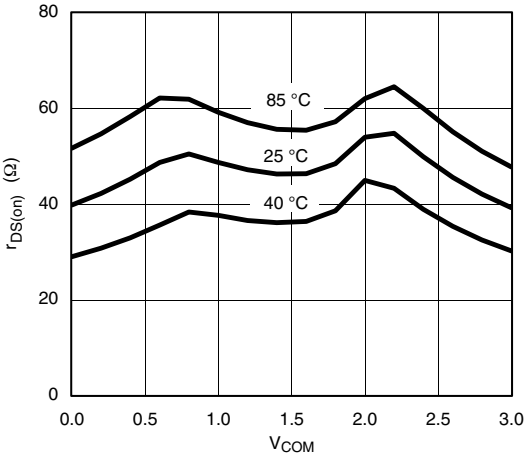

R_{DS} vs. V_{COM}

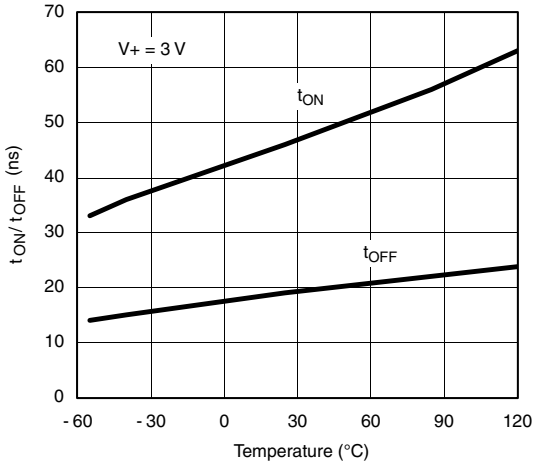

Switching Time vs. Temperature

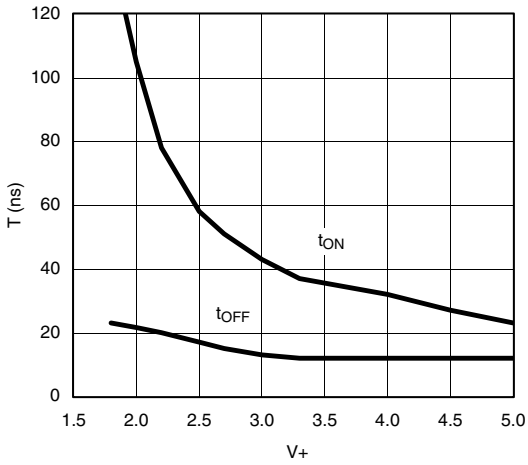

t_{ON}/t_{OFF} vs. Power Supply Voltage

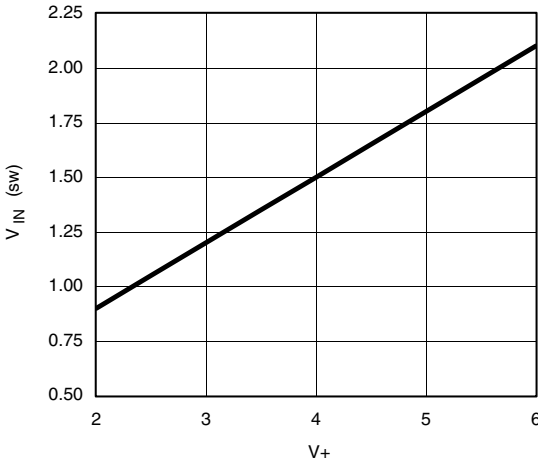

Input Switching Point vs. Power Supply Voltage

This document is subject to change without notice.
THE PRODUCTS DESCRIBED HEREIN AND THIS DOCUMENT ARE SUBJECT TO SPECIFIC DISCLAIMERS, SET FORTH AT www.vishay.com/doc?91000

TEST CIRCUITS

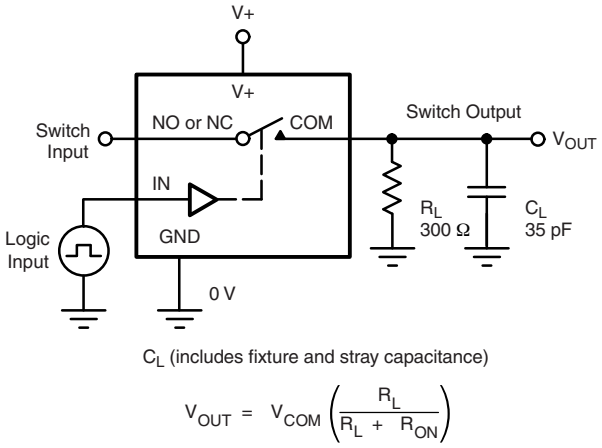

C_L (includes fixture and stray capacitance)

$$V_{OUT} = V_{COM}\left(\frac{R_L}{R_L + R_{ON}}\right)$$

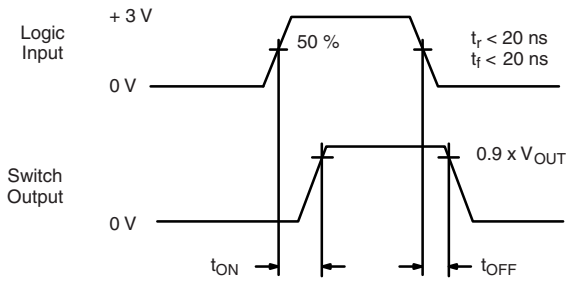

Logic "1" = Switch On
Logic input waveforms inverted for switches that have the opposite logic sense.

Figure 1. Switching Time

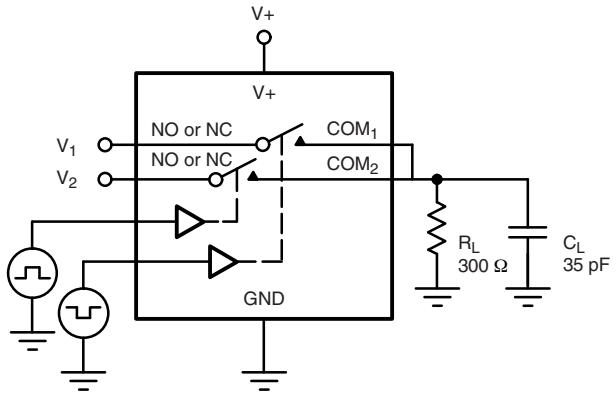

C_L (includes fixture and stray capacitance)

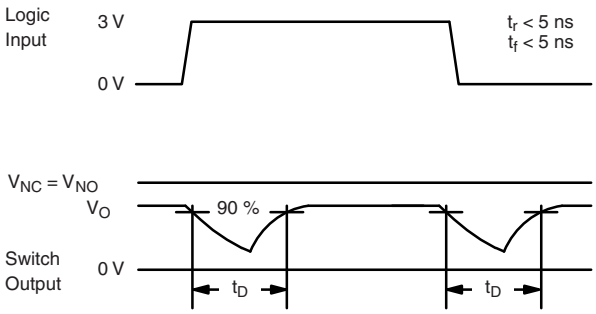

Figure 2. Break-Before-Make Interval

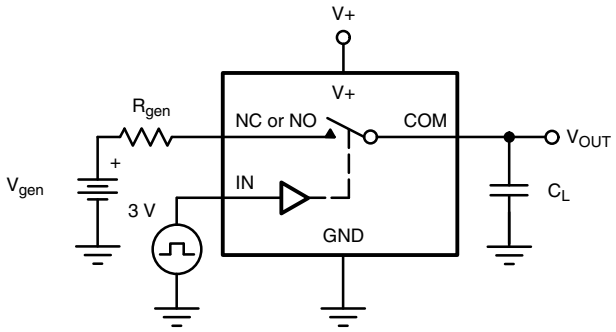

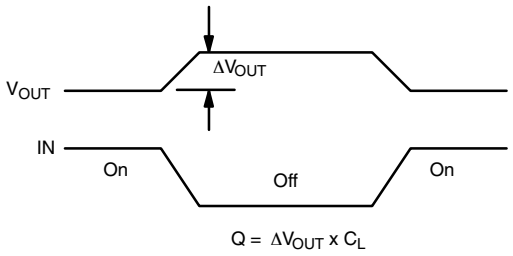

$Q = \Delta V_{OUT} \times C_L$

IN depends on switch configuration: input polarity determined by sense of switch.

Figure 3. Charge Injection

This document is subject to change without notice.
THE PRODUCTS DESCRIBED HEREIN AND THIS DOCUMENT ARE SUBJECT TO SPECIFIC DISCLAIMERS, SET FORTH AT www.vishay.com/doc?91000

TEST CIRCUITS

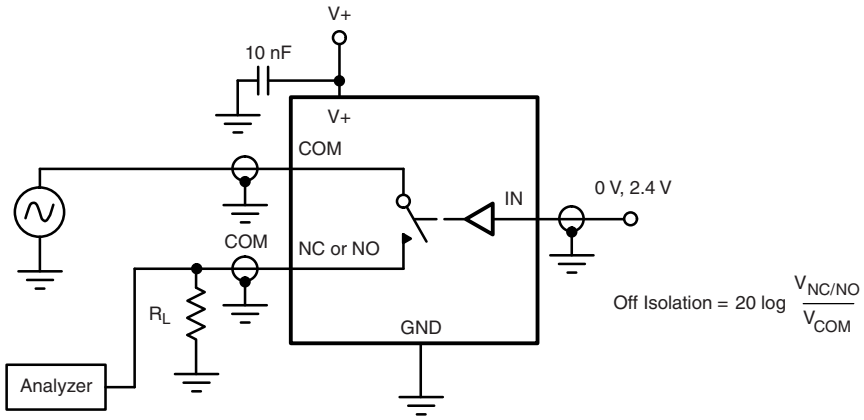

Figure 4. Off-Isolation

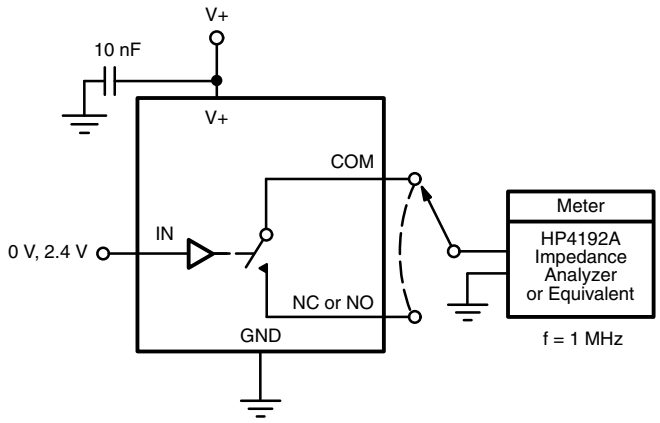

Figure 5. Channel Off/On Capacitance

Vishay Siliconix maintains worldwide manufacturing capability. Products may be manufactured at one of several qualified locations. Reliability data for Silicon Technology and Package Reliability represent a composite of all qualified locations. For related documents such as package/tape drawings, part marking, and reliability data, see www.vishay.com/ppg?70862.

This document is subject to change without notice.
THE PRODUCTS DESCRIBED HEREIN AND THIS DOCUMENT ARE SUBJECT TO SPECIFIC DISCLAIMERS, SET FORTH AT www.vishay.com/doc?91000

SOIC (NARROW): 8-LEAD
JEDEC Part Number: MS-012

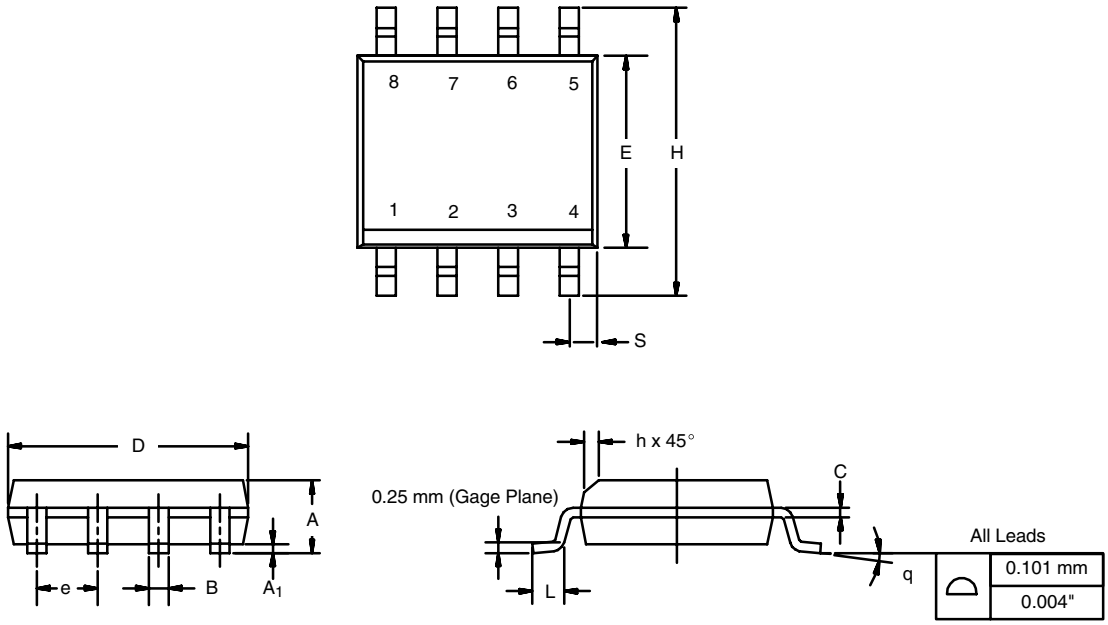

DIM	MILLIMETERS		INCHES	
	Min	Max	Min	Max
A	1.35	1.75	0.053	0.069
A_1	0.10	0.20	0.004	0.008
B	0.35	0.51	0.014	0.020
C	0.19	0.25	0.0075	0.010
D	4.80	5.00	0.189	0.196
E	3.80	4.00	0.150	0.157
e	1.27 BSC		0.050 BSC	
H	5.80	6.20	0.228	0.244
h	0.25	0.50	0.010	0.020
L	0.50	0.93	0.020	0.037
q	0°	8°	0°	8°
S	0.44	0.64	0.018	0.026
ECN: C-06527-Rev. I, 11-Sep-06 DWG: 5498				

MSOP: 8-LEADS

JEDEC Part Number: MO-187, (Variation AA and BA)

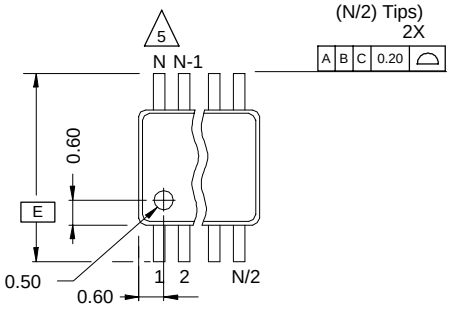

Top View

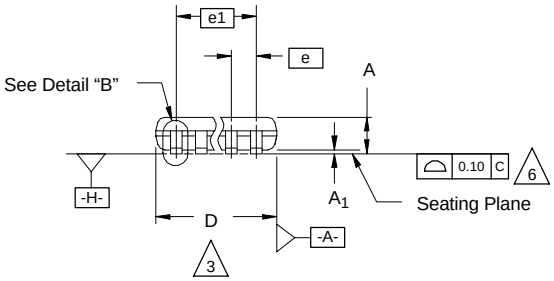

Side View

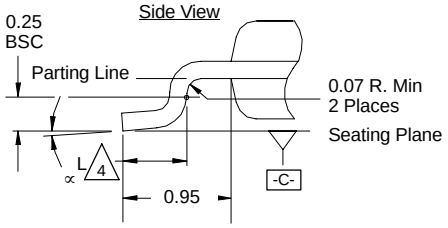

Detail "A"
(Scale: 30/1)

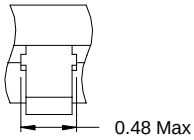

Detail "B"
(Scale: 30/1)
Dambar Protrusion

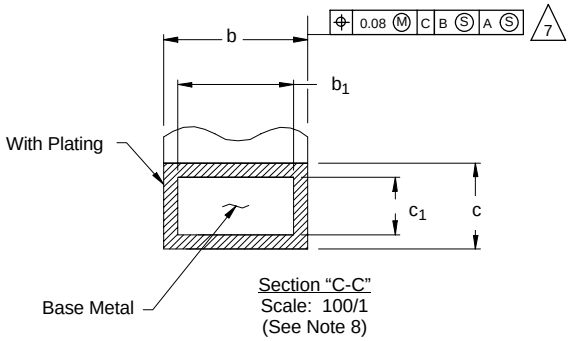

Section "C-C"
Scale: 100/1
(See Note 8)

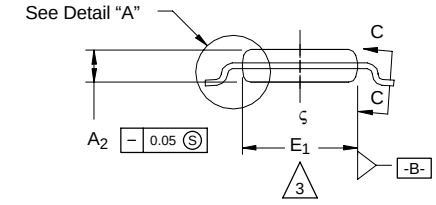

End View

NOTES:

1. Die thickness allowable is 0.203 ± 0.0127.
2. Dimensioning and tolerances per ANSI.Y14.5M-1994.
3. Dimensions "D" and "E_1" do not include mold flash or protrusions, and are measured at Datum plane -H- , mold flash or protrusions shall not exceed 0.15 mm per side.
4. Dimension is the length of terminal for soldering to a substrate.
5. Terminal positions are shown for reference only.
6. Formed leads shall be planar with respect to one another within 0.10 mm at seating plane.
7. The lead width dimension does not include Dambar protrusion. Allowable Dambar protrusion shall be 0.08 mm total in excess of the lead width dimension at maximum material condition. Dambar cannot be located on the lower radius or the lead foot. Minimum space between protrusions and an adjacent lead to be 0.14 mm. See detail "B" and Section "C-C".
8. Section "C-C" to be determined at 0.10 mm to 0.25 mm from the lead tip.
9. Controlling dimension: millimeters.
10. This part is compliant with JEDEC registration MO-187, variation AA and BA.
11. Datums -A- and -B- to be determined Datum plane -H- .
12. Exposed pad area in bottom side is the same as teh leadframe pad size.

N = 8L

Dim	MILLIMETERS			Note
	Min	Nom	Max	
A	-	-	1.10	
A_1	0.05	0.10	0.15	
A_2	0.75	0.85	0.95	
b	0.25	-	0.38	8
b_1	0.25	0.30	0.33	8
c	0.13	-	0.23	
c_1	0.13	0.15	0.18	
D	3.00 BSC			3
E	4.90 BSC			
E_1	2.90	3.00	3.10	3
e	0.65 BSC			
e_1	1.95 BSC			
L	0.40	0.55	0.70	4
N	8			5
∝	0°	4°	6°	

ECN: T-02080—Rev. C, 15-Jul-02
DWG: 5867

RECOMMENDED MINIMUM PADS FOR SO-8

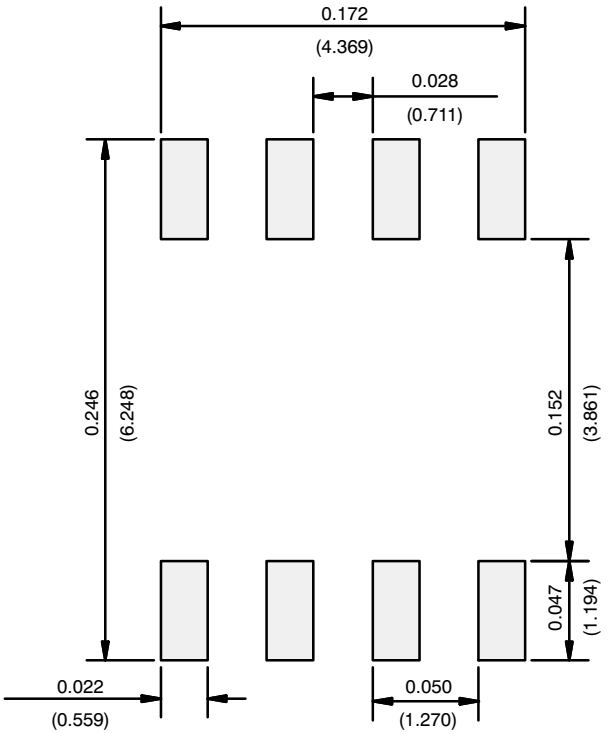

Recommended Minimum Pads
Dimensions in Inches/(mm)

Return to Index

Disclaimer

ALL PRODUCT, PRODUCT SPECIFICATIONS AND DATA ARE SUBJECT TO CHANGE WITHOUT NOTICE TO IMPROVE RELIABILITY, FUNCTION OR DESIGN OR OTHERWISE.

Vishay Intertechnology, Inc., its affiliates, agents, and employees, and all persons acting on its or their behalf (collectively, “Vishay”), disclaim any and all liability for any errors, inaccuracies or incompleteness contained in any datasheet or in any other disclosure relating to any product.

Vishay makes no warranty, representation or guarantee regarding the suitability of the products for any particular purpose or the continuing production of any product. To the maximum extent permitted by applicable law, Vishay disclaims (i) any and all liability arising out of the application or use of any product, (ii) any and all liability, including without limitation special, consequential or incidental damages, and (iii) any and all implied warranties, including warranties of fitness for particular purpose, non-infringement and merchantability.

Statements regarding the suitability of products for certain types of applications are based on Vishay's knowledge of typical requirements that are often placed on Vishay products in generic applications. Such statements are not binding statements about the suitability of products for a particular application. It is the customer's responsibility to validate that a particular product with the properties described in the product specification is suitable for use in a particular application. Parameters provided in datasheets and / or specifications may vary in different applications and performance may vary over time. All operating parameters, including typical parameters, must be validated for each customer application by the customer's technical experts. Product specifications do not expand or otherwise modify Vishay's terms and conditions of purchase, including but not limited to the warranty expressed therein.

Hyperlinks included in this datasheet may direct users to third-party websites. These links are provided as a convenience and for informational purposes only. Inclusion of these hyperlinks does not constitute an endorsement or an approval by Vishay of any of the products, services or opinions of the corporation, organization or individual associated with the third-party website. Vishay disclaims any and all liability and bears no responsibility for the accuracy, legality or content of the third-party website or for that of subsequent links.

Vishay products are not designed for use in life-saving or life-sustaining applications or any application in which the failure of the Vishay product could result in personal injury or death unless specifically qualified in writing by Vishay. Customers using or selling Vishay products not expressly indicated for use in such applications do so at their own risk. Please contact authorized Vishay personnel to obtain written terms and conditions regarding products designed for such applications.

No license, express or implied, by estoppel or otherwise, to any intellectual property rights is granted by this document or by any conduct of Vishay. Product names and markings noted herein may be trademarks of their respective owners.

© 2024 VISHAY INTERTECHNOLOGY, INC. ALL RIGHTS RESERVED

Looking for pricing, stock, or lifecycle information?

Click below to explore more details on WIN SOURCE:

- View DG9263DY-T1-E3 on WIN SOURCE
- Vishay Information

Optimize Your Supply Chain with WIN SOURCE Solutions

- Global Sourcing Solution
- Obsolete Management
- Cost Control Management
- Shortage Management
- Alternative Solution
- Excess Inventory Management