THE DATASHEET OF

MAL211892159E3

www.win-source.net 0086-755-83957316

Aluminum Electrolytic Capacitors
Axial High Temperature



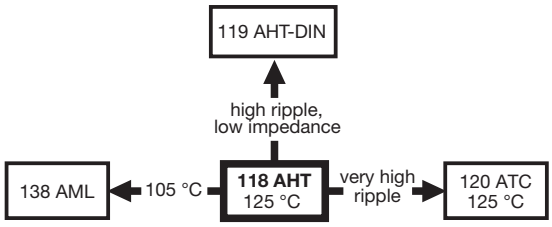

Fig. 1

QUICK REFERENCE DATA		
DESCRIPTION	**VALUE**	
Nominal case sizes (Ø D x L in mm)	6.5 x 18 to 10 x 25	10 x 30 to 21 x 38
Rated capacitance range, C_R	4.7 µF to 10 000 µF	
Tolerance on C_R	± 20 %	
Rated voltage range, U_R	6.3 V to 200 V	
Category temperature range	-40 °C to +125 °C	-55 °C to +125 °C
Endurance test at 150 °C (6.3 V to 100 V)	500 h	500 h
Endurance test at 125 °C	2000 h	3000 h
Useful life at 125 °C	4000 h	8000 h
Useful life at 40 °C, 1.8 x I_R applied	500 000 h	1 000 000 h
Shelf life at 0 V, 125 °C: U_R = 6.3 V to 63 V U_R = 100 V and 200 V	500 h 100 h	
Based on sectional specification	IEC 60384-4 / EN130300	
Climatic category IEC 60068	40 / 125 / 56	55 / 125 / 56

FEATURES

- Polarized aluminum electrolytic capacitors, non-solid electrolyte
- Axial leads, cylindrical aluminum case, insulated with a blue sleeve
- Mounting ring version not available in insulated form
- Taped versions up to case Ø 15 mm x 30 mm available for automatic insertion
- Charge and discharge proof
- Extra long useful life: up to 8000 h at 125 °C, high reliability
- Extended temperature range: 125 °C (usable up to 150 °C)
- Miniaturized, high CV-product per unit volume
- Material categorization: for definitions of compliance please see www.vishay.com/doc?99912

Pb-free

RoHS COMPLIANT

APPLICATIONS

- Automotive, industrial and telecommunication
- Smoothing, filtering, coupling, decoupling, timing
- For use after very long storage (10 years) without voltage applied
- Portable and mobile equipment (small size, low mass)
- Low mounting height boards, vibration and shock resistant
- Outdoor applications, e.g. aerial amplifiers

MARKING

The capacitors are marked (where possible) with the following information:

- Rated capacitance (in µF)
- Tolerance on rated capacitance, code letter in accordance with IEC 60062 (M for ± 20 %)
- Rated voltage (in V) at 125 °C and 85 °C
- Date code, in accordance with IEC 60062
- Code indicating factory of origin
- Name of manufacturer
- Negative terminal identification
- Series number (118)

For technical questions, contact: aluminumcaps1@vishay.com

THIS DOCUMENT IS SUBJECT TO CHANGE WITHOUT NOTICE. THE PRODUCTS DESCRIBED HEREIN AND THIS DOCUMENT ARE SUBJECT TO SPECIFIC DISCLAIMERS, SET FORTH AT www.vishay.com/doc?91000

SELECTION CHART FOR C_R, U_R, AND RELEVANT NOMINAL CASE SIZES (Ø D x L in mm)								
C_R (µF)	U_R (V)							
	6.3	10	16	25	40	63	100	200
4.7	-	-	-	-	-	6.5 x 18	6.5 x 18	-
10	-	-	-	-	-	6.5 x 18	6.5 x 18	-
15	-	-	-	-	-	-	-	10 x 30
22	-	-	-	-	-	6.5 x 18	8 x 18	12.5 x 30
33	-	-	-	-	-	-	10 x 25	15 x 30
47	-	-	-	-	6.5 x 18	8 x 18	10 x 25	18 x 30
	-	-	-	-	-	-	10 x 30	-
68	-	-	-	-	-	-	12.5 x 30	18 x 38
100	-	-	-	6.5 x 18	8 x 18	10 x 25	12.5 x 30	21 x 38
	-	-	-	-	-	10 x 30	-	-
150	-	-	-	-	10 x 18	12.5 x 30	15 x 30	-
220	-	6.5 x 18	8 x 18	10 x 18	10 x 25	12.5 x 30	18 x 30	-
	-	-	-	-	10 x 30	-	-	-
330	-	8 x 18	10 x 18	10 x 25	12.5 x 30	15 x 30	18 x 38	-
470	-	8 x 18	10 x 18	10 x 25	12.5 x 30	18 x 30	21 x 38	-
	-	-	-	10 x 30	-	-	-	-
680	-	-	10 x 30	12.5 x 30	15 x 30	18 x 38	-	-
1000	10 x 18	10 x 25	12.5 x 30	12.5 x 30	18 x 30	21 x 38	-	-
	-	10 x 30	-	-	-	-	-	-
1500	10 x 25	12.5 x 30	12.5 x 30	15 x 30	18 x 38	-	-	-
2200	-	12.5 x 30	15 x 30	18 x 30	21 x 38	-	-	-
3300	-	15 x 30	18 x 30	18 x 38	-	-	-	-
4700	-	18 x 30	18 x 38	21 x 38	-	-	-	-
6800	-	18 x 38	21 x 38	-	-	-	-	-
10 000	-	21 x 38	-	-	-	-	-	-

DIMENSIONS in millimeters **AND AVAILABLE FORMS**

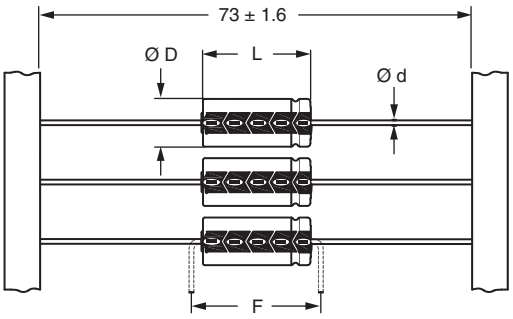

Form BR: Taped on reel
Case Ø D x L = 6.5 mm x 18 mm to 15 mm x 30 mm

Form BA: Taped in box (ammopack)
Case Ø D x L = 6.5 mm x 18 mm to 10 mm x 25 mm

Fig. 2 - **Forms BA** and **BR**

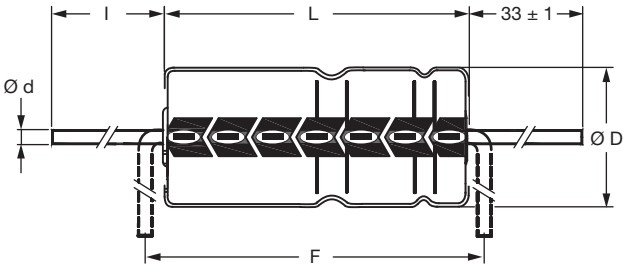

Form AA: Axial in box
Case Ø D x L = 10 mm x 30 mm to 21 mm x 38 mm

Fig. 3 - **Form AA**

For technical questions, contact: aluminumcaps1@vishay.com

THIS DOCUMENT IS SUBJECT TO CHANGE WITHOUT NOTICE. THE PRODUCTS DESCRIBED HEREIN AND THIS DOCUMENT ARE SUBJECT TO SPECIFIC DISCLAIMERS, SET FORTH AT www.vishay.com/doc?91000

Table 1

AXIAL; DIMENSIONS in millimeters, MASS AND PACKAGING QUANTITIES										
NOMINAL CASE SIZE Ø D x L	CASE CODE	AXIAL: FORM AA, BA AND BR					MASS (g)	PACKAGING QUANTITIES		
		Ø d	l	Ø $D_{max.}$	$L_{max.}$	$F_{min.}$		FORM AA	FORM BA	FORM BR
6.5 x 18	4	0.8	-	6.9	18.5	25	1.3	-	1000	1000
8 x 18	5	0.8	-	8.5	18.5	25	1.7	-	500	500
10 x 18	6	0.8	-	10.5	18.5	25	2.5	-	500	500
10 x 25	7	0.8	-	10.5	25.5	30	3.3	-	500	500
10 x 30	00	0.8	55 ± 1	10.5	30.5	35	4.8	340	-	500
12.5 x 30	01	0.8	55 ± 1	13.0	30.5	35	7.4	260	-	400
15 x 30	02	0.8	55 ± 1	15.5	30.5	35	11.7	200	-	250
18 x 30	03	0.8	55 ± 1	18.5	30.5	35	12.9	120	-	-
18 x 38	04	0.8	34 ± 1	18.5	39.5	44	19	125	-	-
21 x 38	05	0.8	34 ± 1	21.5	39.5	44	24	100	-	-

Note

- Detailed tape dimensions see section “Packaging”.

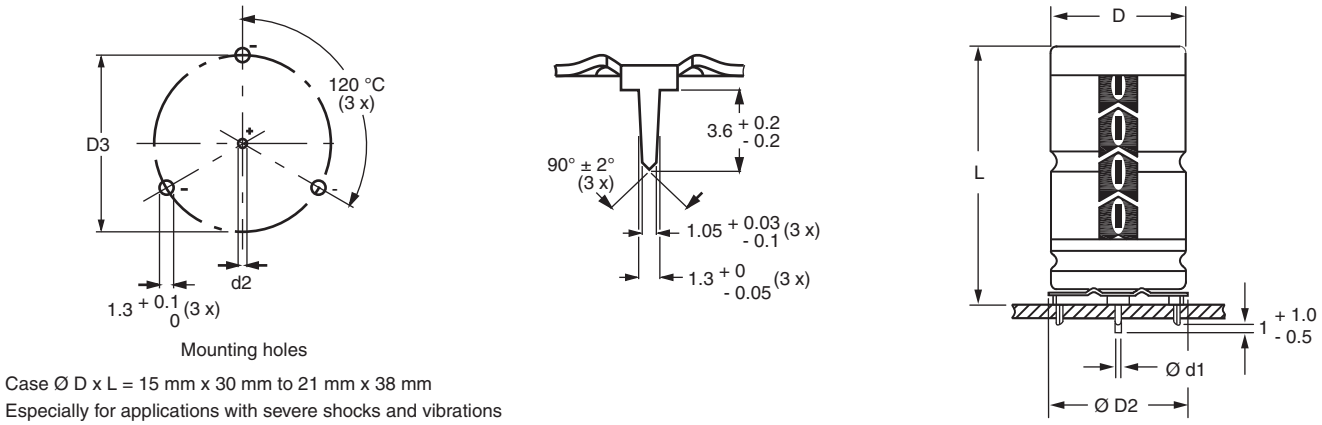

Case Ø D x L = 15 mm x 30 mm to 21 mm x 38 mm
Especially for applications with severe shocks and vibrations

Fig. 4 - Mounting hole diagram and outline; **Form MR:** With mounting ring and pins

MOUNTING RING; DIMENSIONS in millimeters, MASS AND PACKAGING QUANTITIES									
NOMINAL CASE SIZE Ø D x L	CASE CODE	MOUNTING RING: FORM MR						MASS (g)	PACKAGING QUANTITIES
		Ø d1	Ø d2	Ø $D_{max.}$	Ø $D2_{max.}$	D3	$L_{max.}$		
15 x 30	02	0.8	1.0 + 0.4	15.5	17.5	16.5 ± 0.2	33	≈ 8.6	200
18 x 30	03	0.8	1.0 + 0.4	18.5	19.5	18.5 ± 0.2	33	≈ 11.5	240
18 x 38	04	0.8	1.0 + 0.4	18.5	19.5	18.5 ± 0.2	42	≈ 14.0	100
21 x 38	05	0.8	1.0 + 0.4	21.5	22.5	21.5 ± 0.2	42	≈ 19.0	100

ELECTRICAL DATA	
SYMBOL	DESCRIPTION
C_R	Rated capacitance at 100 Hz, tolerance ± 20 %
I_R	Rated RMS ripple current at 100 Hz, 125 °C
I_{L1}	Max. leakage current after 1 min at U_R
I_{L5}	Max. leakage current after 5 min at U_R
tan δ	Max. dissipation factor at 100 Hz
ESR	Equivalent series resistance at 100 Hz (calculated from tan $\delta_{max.}$ and C_R)
Z	Max. impedance at 10 kHz

Note

- Unless otherwise specified, all electrical values in Table 2 apply at T_{amb} = 20 °C, P = 86 kPa to 106 kPa, RH = 45 % to 75 %.

ORDERING EXAMPLE

Electrolytic capacitor 118 series

1000 µF / 10 V; ± 20 %

Nominal case size: Ø 10 mm x 30 mm; Form BR

Ordering code: MAL211824102E3
Former 12NC: 2222 118 24102

For technical questions, contact: aluminumcaps1@vishay.com

THIS DOCUMENT IS SUBJECT TO CHANGE WITHOUT NOTICE. THE PRODUCTS DESCRIBED HEREIN AND THIS DOCUMENT ARE SUBJECT TO SPECIFIC DISCLAIMERS, SET FORTH AT www.vishay.com/doc?91000

Table 2

ELECTRICAL DATA AND ORDERING INFORMATION													
U_R (V)	C_R 100 Hz (µF)	NOMINAL CASE SIZE Ø D x L (mm)	CASE CODE	I_R 100 Hz 125 °C (mA)	I_{L1} 1 min (µA)	I_{L5} 5 min (µA)	tan δ 100 Hz	ESR 100 Hz (Ω)	Z 10 kHz (Ω)	ORDERING CODE MAL2118.....			
										IN BOX FORM AA	TAPED ON REEL FORM BR	TAPED IN BOX FORM BA	MOUNTING RING FORM MR
6.3	1000	10 x 18	6	251	42	17	0.50	0.790	0.80	-	23102E3	33102E3	-
	1500	10 x 25	7	352	61	23	0.50	0.530	0.53	-	90502E3	90503E3	-
10	220	6.5 x 18	4	109	20	8.4	0.35	2.530	2.10	-	24221E3	34221E3	-
	330	8 x 18	5	150	24	11	0.35	1.690	1.40	-	24331E3	34331E3	-
	470	8 x 18	5	179	32	13	0.35	1.190	1.00	-	24471E3	34471E3	-
	1000	10 x 25	7	343	64	24	0.35	0.560	0.55	-	90504E3	90505E3	-
	1000	10 x 30	00	550	64	24	0.32	0.505	0.45	14102E3	24102E3	-	-
	1500	12.5 x 30	01	740	94	34	0.32	0.340	0.28	14152E3	24152E3	-	-
	2200	12.5 x 30	01	830	136	48	0.40	0.290	0.27	14222E3	24222E3	-	-
	3300	15 x 30	02	1070	202	70	0.40	0.190	0.18	14332E3	24332E3	-	44332E3
	4700	18 x 30	03	1350	286	98	0.46	0.155	0.15	14472E3	-	-	44472E3
	6800	18 x 38	04	1730	412	140	0.53	0.100	0.10	14682E3	-	-	44682E3
	10 000	21 x 38	05	1860	604	200	0.53	0.084	0.10	14103E3	-	-	44103E3
16	220	8 x 18	5	145	25	11	0.25	1.810	1.50	-	25221E3	35221E3	-
	330	10 x 18	6	204	36	15	0.25	1.210	1.20	-	25331E3	35331E3	-
	470	10 x 18	6	243	49	19	0.25	0.850	0.83	-	25471E3	35471E3	-
	680	10 x 30	00	510	69	30	0.22	0.525	0.45	15681E3	25681E3	-	-
	1000	12.5 x 30	01	720	100	36	0.22	0.345	0.28	15102E3	25102E3	-	-
	1500	12.5 x 30	01	790	148	52	0.29	0.305	0.27	15152E3	25152E3	-	-
	2200	15 x 30	02	1010	215	74	0.29	0.205	0.18	15222E3	25222E3	-	45222E3
	3300	18 x 30	03	1300	321	110	0.34	0.165	0.15	15332E3	-	-	45332E3
	4700	18 x 38	04	1670	455	150	0.34	0.105	0.10	15472E3	-	-	45472E3
	6800	21 x 38	05	1790	657	220	0.38	0.088	0.10	15682E3	-	-	45682E3
25	100	6.5 x 18	4	102	20	9	0.18	2.860	2.30	-	26101E3	36101E3	-
	220	10 x 18	6	196	37	15	0.18	1.300	1.25	-	26221E3	36221E3	-
	330	10 x 25	7	274	54	21	0.18	0.870	0.82	-	26331E3	36331E3	-
	470	10 x 25	7	327	75	28	0.18	0.610	0.57	-	90508E3	90509E3	-
	470	10 x 30	00	490	75	28	0.18	0.610	0.50	16471E3	26471E3	-	-
	680	12.5 x 30	01	680	106	38	0.18	0.420	0.30	16681E3	26681E3	-	-
	1000	12.5 x 30	01	760	154	54	0.24	0.375	0.28	16102E3	26102E3	-	-
	1500	15 x 30	02	980	229	79	0.25	0.263	0.22	16152E3	26152E3	-	46152E3
	2200	18 x 30	03	1240	334	110	0.26	0.185	0.17	16222E3	-	-	46222E3
	3300	18 x 38	04	1610	499	170	0.26	0.120	0.11	16332E3	-	-	46332E3
	4700	21 x 38	05	1710	709	240	0.28	0.095	0.10	16472E3	-	-	46472E3
40	47	6.5 x 18	4	89.8	20	7.8	0.11	3.720	2.80	-	27479E3	37479E3	-
	100	8 x 18	5	147	28	12	0.11	1.750	1.30	-	27101E3	37101E3	-
	150	10 x 18	6	207	40	16	0.11	1.170	1.00	-	27151E3	37151E3	-
	220	10 x 25	7	287	57	22	0.11	0.800	0.68	-	90511E3	90512E3	-
	220	10 x 30	00	390	57	22	0.10	0.700	0.55	17221E3	27221E3	-	-
	330	12.5 x 30	01	570	83	30	0.10	0.430	0.33	17331E3	27331E3	-	-
	470	12.5 x 30	01	620	117	42	0.11	0.380	0.30	17471E3	27471E3	-	-
	680	15 x 30	02	810	167	58	0.11	0.255	0.23	17681E3	27681E3	-	47681E3
	1000	18 x 30	03	1070	244	84	0.13	0.205	0.18	17102E3	-	-	47102E3
	1500	18 x 38	04	1390	364	120	0.13	0.130	0.11	17152E3	-	-	47152E3
	2200	21 x 38	05	1540	532	180	0.15	0.105	0.10	17222E3	-	-	47222E3

For technical questions, contact: aluminumcaps1@vishay.com
THIS DOCUMENT IS SUBJECT TO CHANGE WITHOUT NOTICE. THE PRODUCTS DESCRIBED HEREIN AND THIS DOCUMENT ARE SUBJECT TO SPECIFIC DISCLAIMERS, SET FORTH AT www.vishay.com/doc?91000

ELECTRICAL DATA AND ORDERING INFORMATION

U_R (V)	C_R 100 Hz (µF)	NOMINAL CASE SIZE Ø D x L (mm)	CASE CODE	I_R 100 Hz 125 °C (mA)	I_{L1} 1 min (µA)	I_{L5} 5 min (µA)	tan δ 100 Hz	ESR 100 Hz (Ω)	Z 10 kHz (Ω)	ORDERING CODE MAL2118.....			
										IN BOX FORM AA	TAPED ON REEL FORM BR	TAPED IN BOX FORM BA	MOUNTING RING FORM MR
63	4.7	6.5 x 18	4	35.6	20	4.6	0.07	24.0	8.90	-	28478E3	38478E3	-
	10	6.5 x 18	4	51.9	20	5.3	0.07	11.0	5.60	-	28109E3	38109E3	-
	22	6.5 x 18	4	77.0	20	6.8	0.07	5.10	3.20	-	28229E3	38229E3	-
	47	8 x 18	5	126	22	9.9	0.07	2.40	1.50	-	28479E3	38479E3	-
	100	10 x 25	7	243	42	17	0.07	1.10	0.70	-	90513E3	90514E3	-
	100	10 x 30	00	340	42	17	0.07	1.91	1.62	18101E3	28101E3	-	-
	150	12.5 x 30	01	490	61	23	0.07	1.00	0.79	18151E3	28151E3	-	-
	220	12.5 x 30	01	550	87	32	0.08	0.94	0.82	18221E3	28221E3	-	-
	330	15 x 30	02	730	129	46	0.09	0.63	0.56	18331E3	28331E3	-	48331E3
	470	18 x 30	03	970	182	63	0.09	0.44	0.39	18471E3	-	-	48471E3
	680	18 x 38	04	1230	261	90	0.09	0.30	0.26	18681E3	-	-	48681E3
	1000	21 x 38	05	1400	383	130	0.10	0.16	0.20	18102E3	-	-	48102E3
100	4.7	6.5 x 18	4	36	20	4.9	0.07	24.0	19.0	-	29478E3	39478E3	-
	10	6.5 x 18	4	52	20	6.0	0.07	11.0	9.00	-	29109E3	39109E3	-
	22	8 x 18	5	91	20	8.4	0.07	5.10	4.00	-	29229E3	39229E3	-
	33	10 x 25	7	140	24	11	0.07	3.40	2.70	-	29339E3	39339E3	-
	47	10 x 25	7	170	33	13	0.07	2.60	2.00	-	90535E3	90536E3	-
	47	10 x 30	00	240	33	13	0.08	2.60	2.00	19479E3	29479E3	-	-
	68	12.5 x 30	01	320	45	18	0.08	1.80	1.20	19689E3	29689E3	-	-
	100	12.5 x 30	01	380	64	24	0.09	1.40	1.15	19101E3	29101E3	-	-
	150	15 x 30	02	500	94	34	0.10	0.94	0.78	19151E3	29151E3	-	49151E3
	220	18 x 30	03	690	136	48	0.10	0.66	0.55	19221E3	-	-	49221E3
	330	18 x 38	04	890	202	70	0.10	0.45	0.37	19331E3	-	-	49331E3
	470	21 x 38	05	1050	286	98	0.10	0.33	0.28	19471E3	-	-	49471E3
200	15	10 x 30	00	150	22	10	0.046	4.76	3.75	92159E3	90012E3	-	-
	22	12.5 x 30	01	210	31	13	0.046	3.17	2.22	92229E3	90013E3	-	-
	33	15 x 30	02	290	44	17	0.046	2.11	1.11	92339E3	90014E3	-	90002E3
	47	18 x 30	03	390	61	23	0.046	1.48	0.60	92479E3	-	-	90003E3
	68	18 x 38	04	500	86	31	0.046	1.02	0.42	92689E3	-	-	90004E3
	100	21 x 38	05	610	124	44	0.046	0.96	0.39	92101E3	-	-	90005E3

For technical questions, contact: aluminumcaps1@vishay.com
THIS DOCUMENT IS SUBJECT TO CHANGE WITHOUT NOTICE. THE PRODUCTS DESCRIBED HEREIN AND THIS DOCUMENT ARE SUBJECT TO SPECIFIC DISCLAIMERS, SET FORTH AT www.vishay.com/doc?91000

ADDITIONAL ELECTRICAL DATA			
PARAMETER	CONDITIONS	VALUE	
		AXIAL	MOUNTING RING
Voltage			
Surge voltage		$U_s \leq 1.15 \times U_R$	
Reverse voltage		$U_{rev} \leq 1$ V	
Current			
Leakage current	After 1 min at U_R	$I_{L1} \leq 0.006\ C_R \times U_R + 4\ \mu A$ or 20 µA (whichever is greater)	
	After 5 min at U_R	$I_{L5} \leq 0.002\ C_R \times U_R + 4\ \mu A$	
Inductance			
Equivalent series inductance (ESL)	Case Ø D x L mm:		
	6.5 x 18	Typ. 15 nH	-
	8 x 18	Typ. 35 nH	-
	10 x 18	Typ. 69 nH	-
	10 x 25	Typ. 38 nH	-
	10 x 30	Typ. 38 nH	-
	12.5 x 30	Typ. 46 nH	-
	15 x 30	Typ. 48 nH	Typ. 39 nH
	18 x 30	Typ. 50 nH	Typ. 39 nH
	18 x 38	Typ. 54 nH	Typ. 39 nH
	21 x 38	Typ. 59 nH	Typ. 39 nH

Table 3

UPRATING VALUES AT REDUCED AMBIENT TEMPERATURE										
SYMBOL	CONDITIONS	VALUES								UNIT
U_R	$T_{amb} > 85$ °C to 125 °C	6.3	10	16	25	40	63	100	200	V
U_{R2}	$T_{amb} \leq 85$ °C	10	16	25	40	63	100	125	250	V

Note

- For applications at ambient temperatures of ≤ 85 °C, the rated voltage (U_R) may be raised to U_{R2}.

CAPACITANCE

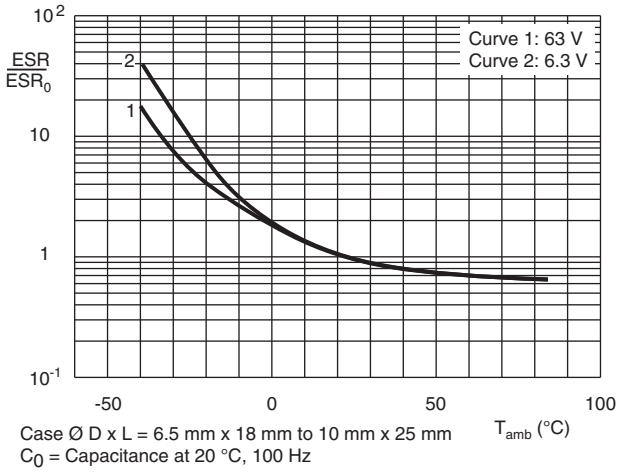

Fig. 5 - Typical multiplier of capacitance as a function of ambient temperature

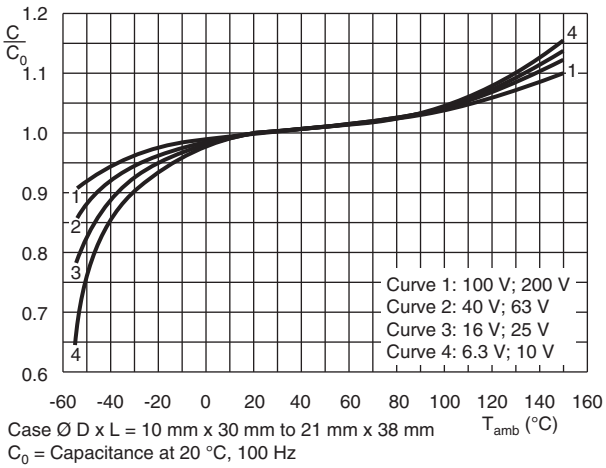

Fig. 6 - Typical multiplier of capacitance as a function of ambient temperature

For technical questions, contact: aluminumcaps1@vishay.com

THIS DOCUMENT IS SUBJECT TO CHANGE WITHOUT NOTICE. THE PRODUCTS DESCRIBED HEREIN AND THIS DOCUMENT ARE SUBJECT TO SPECIFIC DISCLAIMERS, SET FORTH AT www.vishay.com/doc?91000

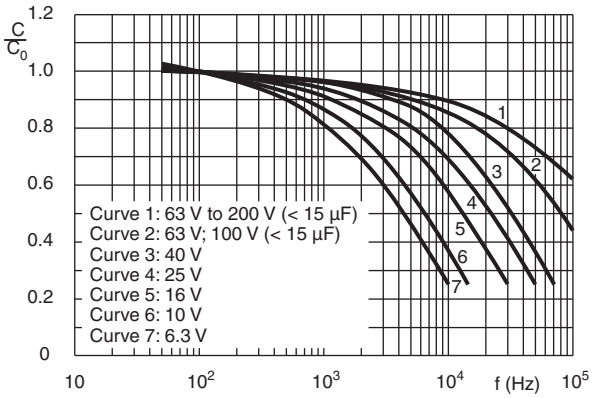

Case Ø D x L = 6.5 mm x 18 mm to 10 mm x 25 mm
C_0 = Capacitance at 20 °C, 100 Hz

Fig. 7 - Typical multiplier of capacitance as a function of frequency

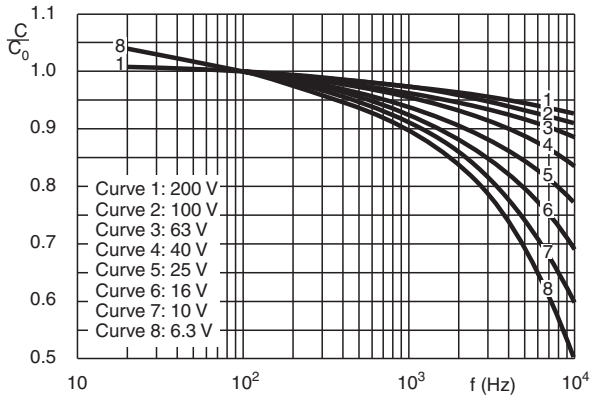

Case Ø D x L = 10 mm x 30 mm to 21 mm x 38 mm
C_0 = Capacitance at 20 °C, 100 Hz

Fig. 8 - Typical multiplier of capacitance as a function of frequency

EQUIVALENT SERIES RESISTANCE (ESR)

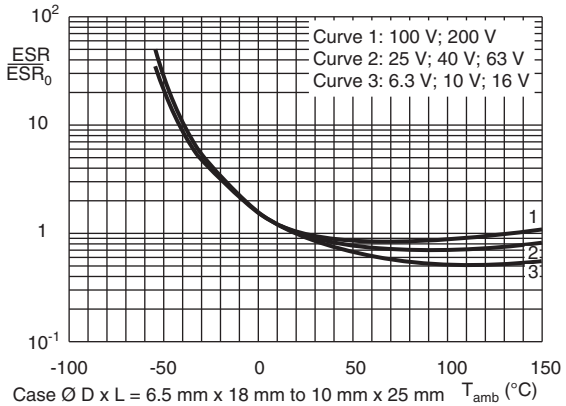

Case Ø D x L = 6.5 mm x 18 mm to 10 mm x 25 mm
ESR_0 = Typical at 20 °C, 100 Hz

Fig. 9 - Typical multiplier of ESR as a function of ambient temperature

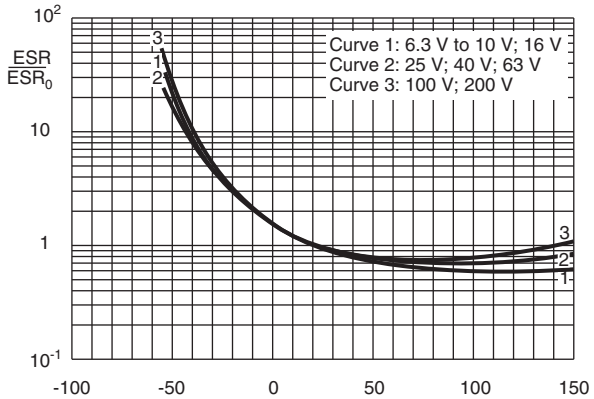

Case Ø D x L = 18 mm x 30 mm to 21 mm x 38 mm
ESR_0 = Typical at 20 °C, 100 Hz

Fig. 10 - Typical multiplier of ESR as a function of ambient temperature

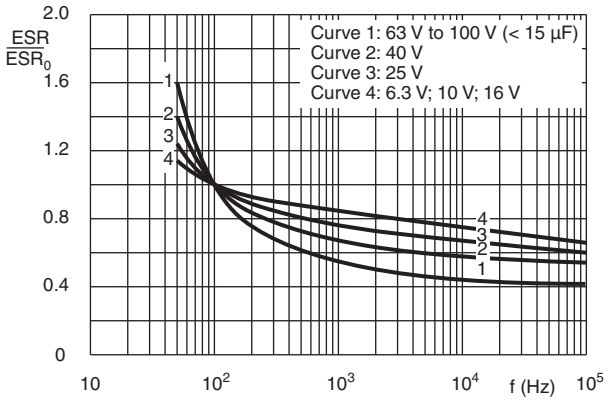

Case Ø D x L = 6.5 mm x 18 mm to 10 mm x 25 mm
ESR_0 = Typical at 20 °C, 100 Hz

Fig. 11 - Typical multiplier of ESR as a function of frequency

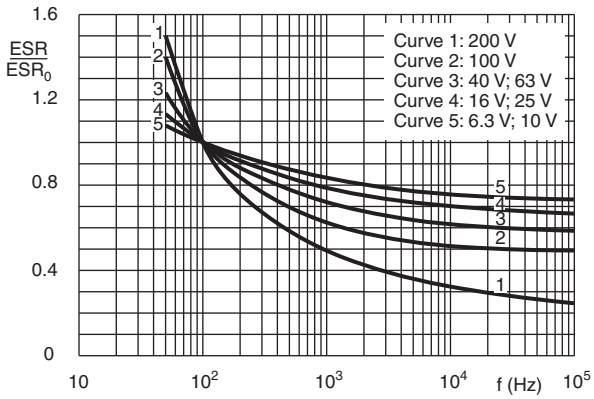

Case Ø D x L = 10 mm x 30 mm to 21 mm x 38 mm
ESR_0 = Typical at 20 °C, 100 Hz

Fig. 12 - Typical multiplier of ESR as a function of frequency

For technical questions, contact: aluminumcaps1@vishay.com
THIS DOCUMENT IS SUBJECT TO CHANGE WITHOUT NOTICE. THE PRODUCTS DESCRIBED HEREIN AND THIS DOCUMENT ARE SUBJECT TO SPECIFIC DISCLAIMERS, SET FORTH AT www.vishay.com/doc?91000

IMPEDANCE (Z)

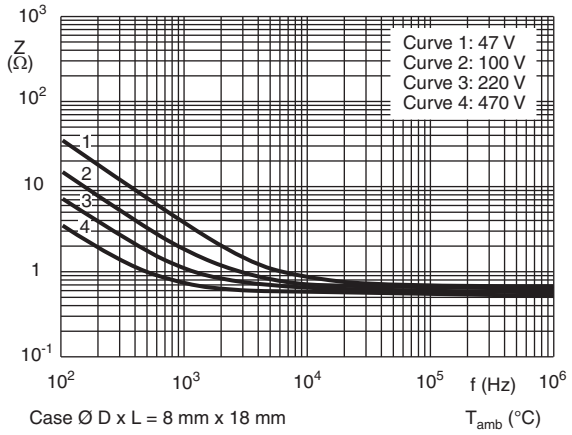

Fig. 13 - Typical impedance as a function of frequency

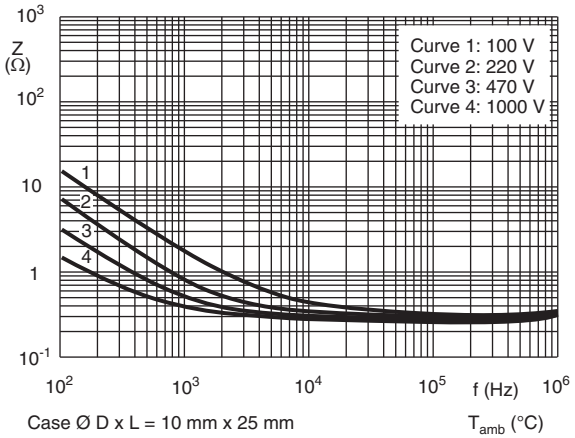

Fig. 14 - Typical impedance as a function of frequency

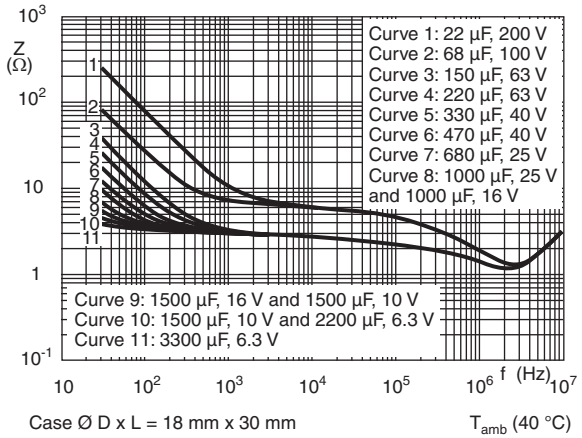

Fig. 15 - Typical impedance as a function of frequency

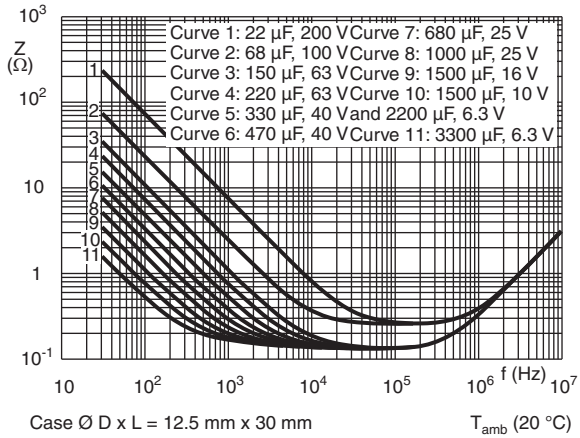

Fig. 16 - Typical impedance as a function of frequency

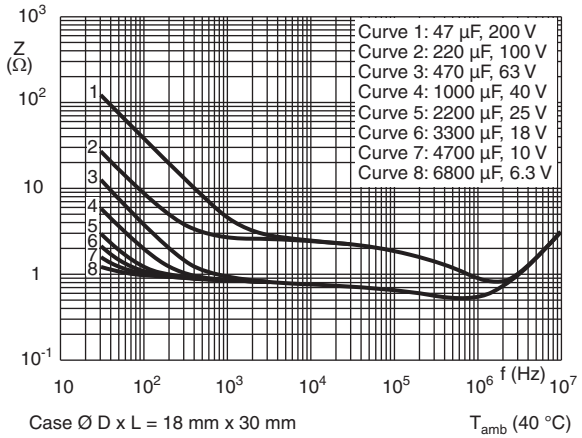

Fig. 17 - Typical impedance as a function of frequency

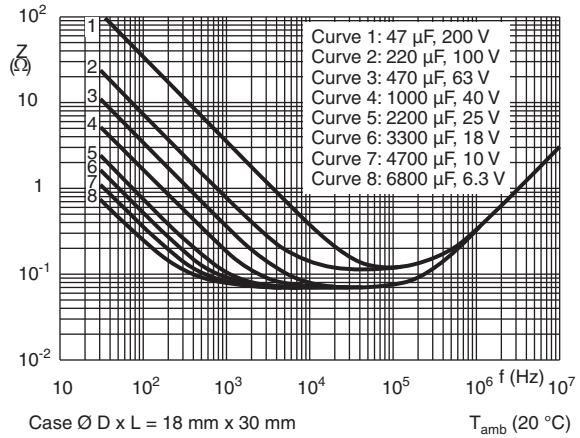

Fig. 18 - Typical impedance as a function of frequency

For technical questions, contact: aluminumcaps1@vishay.com

THIS DOCUMENT IS SUBJECT TO CHANGE WITHOUT NOTICE. THE PRODUCTS DESCRIBED HEREIN AND THIS DOCUMENT ARE SUBJECT TO SPECIFIC DISCLAIMERS, SET FORTH AT www.vishay.com/doc?91000

RIPPLE CURRENT AND USEFUL LIFE

Table 4

ENDURANCE TEST DURATION AND USEFUL LIFE		
NOMINAL CASE SIZE Ø D x L (mm)	**ENDURANCE AT 125 °C (h)**	**USEFUL LIFE AT 125 °C (h)**
6.5 x 18	2000	4000
8 x 18	2000	4000
10 x 18	2000	4000
10 x 25	2000	4000
10 x 30	3000	8000
12.5 x 30	3000	8000
15 x 30	3000	8000
18 x 30	3000	8000
18 x 38	3000	8000
21 x 38	3000	8000

Note

- Multiplier of useful life code: MBC242

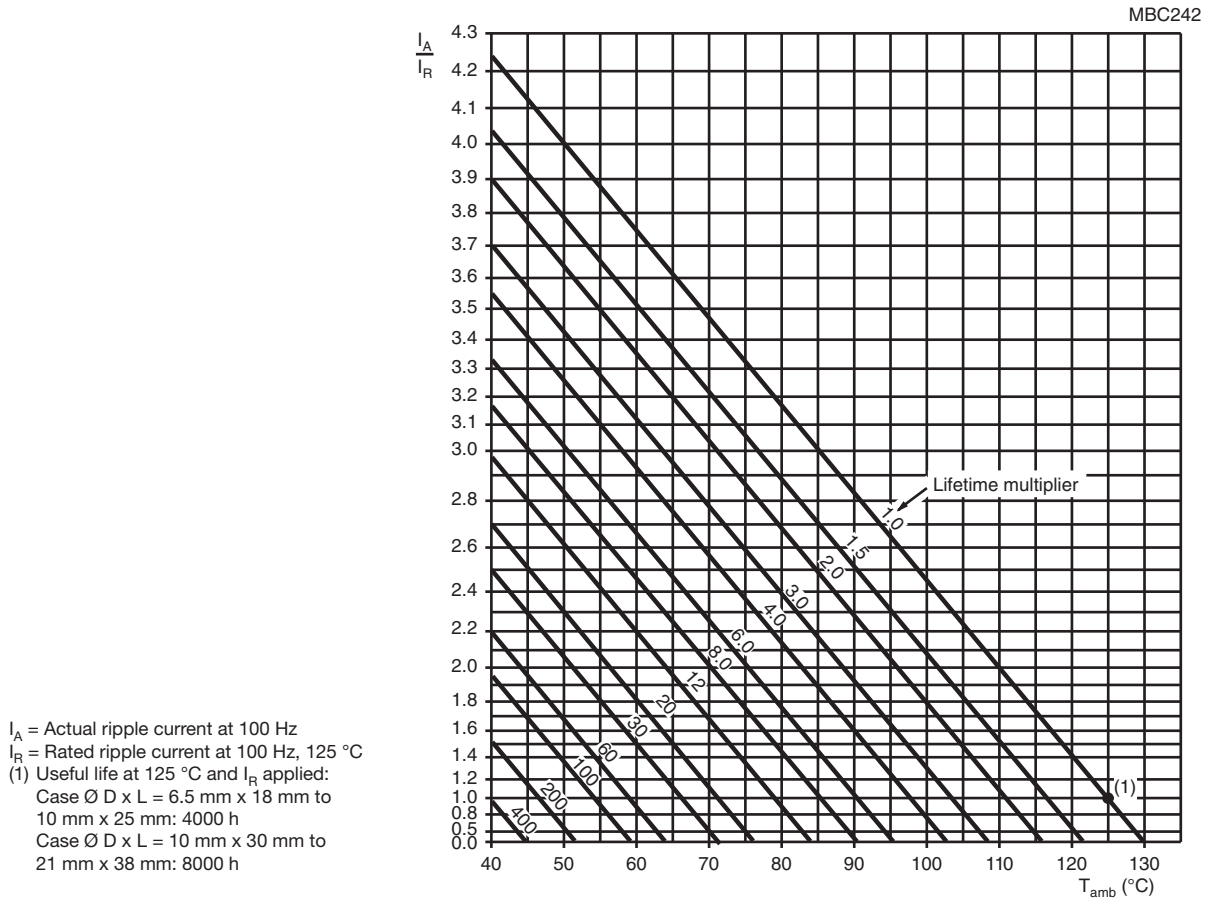

I_A = Actual ripple current at 100 Hz
I_R = Rated ripple current at 100 Hz, 125 °C
(1) Useful life at 125 °C and I_R applied:
Case Ø D x L = 6.5 mm x 18 mm to 10 mm x 25 mm: 4000 h
Case Ø D x L = 10 mm x 30 mm to 21 mm x 38 mm: 8000 h

Fig. 19 - Multiplier of useful life as a function of ambient temperature and ripple current load

For technical questions, contact: aluminumcaps1@vishay.com

THIS DOCUMENT IS SUBJECT TO CHANGE WITHOUT NOTICE. THE PRODUCTS DESCRIBED HEREIN AND THIS DOCUMENT ARE SUBJECT TO SPECIFIC DISCLAIMERS, SET FORTH AT www.vishay.com/doc?91000

Table 5

MULTIPLIER OF RIPPLE CURRENT (I_R) AS A FUNCTION OF FREQUENCY						
U_R (V)	FREQUENCY (Hz)					
	50	100	300	1000	3000	≥ 10 000
	I_R MULTIPLIER					
6.3	0.95	1.00	1.07	1.12	1.15	1.20
10	0.95	1.00	1.07	1.12	1.15	1.20
16	0.95	1.00	1.07	1.12	1.15	1.20
25	0.95	1.00	1.07	1.12	1.15	1.20
40	0.90	1.00	1.12	1.20	1.25	1.30
63	0.90	1.00	1.12	1.20	1.25	1.30
100	0.85	1.00	1.20	1.30	1.35	1.40
200	0.85	1.00	1.20	1.30	1.35	1.40

Table 6

TEST PROCEDURES AND REQUIREMENTS			
TEST		PROCEDURE (quick reference)	REQUIREMENTS
NAME OF TEST	REFERENCE		
Endurance	IEC 60384-4 / EN130300 subclause 4.13	T_{amb} = 125 °C; U_R applied; Case sizes: 6.5 mm x 18 mm to 10 mm x 25 mm: 2000 h; 10 mm x 30 mm to 21 mm x 38 mm: 3000 h	$U_R \leq$ 6.3 V; ΔC/C: +15 % / -30 % U_R > 6.3 V; ΔC/C: ± 15 % tan δ ≤ 1.3 x spec. limit Z ≤ 2 x spec. limit $I_{L5} \leq$ spec. limit
Useful life	CECC 30301 subclause 1.8.1	T_{amb} = 125 °C; U_R and I_R applied; Case Ø D x L = 6.5 mm x 18 mm to 10 mm x 25 mm: 4000 h Case Ø D x L = 10 mm x 30 mm to 21 mm x 38 mm: 8000 h	$U_R \leq$ 6.3 V; ΔC/C: +45 % / -50 % U_R > 6.3 V; ΔC/C: ± 45 % tan δ ≤ 3 x spec. limit Z ≤ 3 x spec. limit $I_{L5} \leq$ spec. limit no short or open circuit total failure percentage: ≤ 1 % (200 V ≤ 3 %)
Shelf life (storage at high temperature)	IEC 60384-4 / EN130300 subclause 4.17	T_{amb} = 125 °C; no voltage applied; U_R = 6.3 V to 63 V: 500 h; U_R = 100 V and 200 V: 100 h After test: U_R to be applied for 30 min, 24 h to 48 h before measurement	ΔC/C, tan δ, Z: for requirements see “Endurance test” above $I_{L5} \leq$ 2 x spec. limit
Reverse voltage	IEC 60384-4 / EN130300 subclause 4.15	T_{amb} = 125 °C: 125 h at U = -1 V followed by 125 h at U_R	ΔC/C: ± 20 % tan δ ≤ spec. limit $I_{L5} \leq$ spec. limit

Statements about product lifetime are based on calculations and internal testing. They should only be interpreted as estimations. Also due to external factors, the lifetime in the field application may deviate from the calculated lifetime. In general, nothing stated herein shall be construed as a guarantee of durability.

For technical questions, contact: aluminumcaps1@vishay.com
THIS DOCUMENT IS SUBJECT TO CHANGE WITHOUT NOTICE. THE PRODUCTS DESCRIBED HEREIN AND THIS DOCUMENT ARE SUBJECT TO SPECIFIC DISCLAIMERS, SET FORTH AT www.vishay.com/doc?91000

Disclaimer

ALL PRODUCT, PRODUCT SPECIFICATIONS AND DATA ARE SUBJECT TO CHANGE WITHOUT NOTICE TO IMPROVE RELIABILITY, FUNCTION OR DESIGN OR OTHERWISE.

Vishay Intertechnology, Inc., its affiliates, agents, and employees, and all persons acting on its or their behalf (collectively, “Vishay”), disclaim any and all liability for any errors, inaccuracies or incompleteness contained in any datasheet or in any other disclosure relating to any product.

Vishay makes no warranty, representation or guarantee regarding the suitability of the products for any particular purpose or the continuing production of any product. To the maximum extent permitted by applicable law, Vishay disclaims (i) any and all liability arising out of the application or use of any product, (ii) any and all liability, including without limitation special, consequential or incidental damages, and (iii) any and all implied warranties, including warranties of fitness for particular purpose, non-infringement and merchantability.

Statements regarding the suitability of products for certain types of applications are based on Vishay's knowledge of typical requirements that are often placed on Vishay products in generic applications. Such statements are not binding statements about the suitability of products for a particular application. It is the customer's responsibility to validate that a particular product with the properties described in the product specification is suitable for use in a particular application. Parameters provided in datasheets and / or specifications may vary in different applications and performance may vary over time. All operating parameters, including typical parameters, must be validated for each customer application by the customer's technical experts. Product specifications do not expand or otherwise modify Vishay's terms and conditions of purchase, including but not limited to the warranty expressed therein.

Hyperlinks included in this datasheet may direct users to third-party websites. These links are provided as a convenience and for informational purposes only. Inclusion of these hyperlinks does not constitute an endorsement or an approval by Vishay of any of the products, services or opinions of the corporation, organization or individual associated with the third-party website. Vishay disclaims any and all liability and bears no responsibility for the accuracy, legality or content of the third-party website or for that of subsequent links.

Vishay products are not designed for use in life-saving or life-sustaining applications or any application in which the failure of the Vishay product could result in personal injury or death unless specifically qualified in writing by Vishay. Customers using or selling Vishay products not expressly indicated for use in such applications do so at their own risk. Please contact authorized Vishay personnel to obtain written terms and conditions regarding products designed for such applications.

No license, express or implied, by estoppel or otherwise, to any intellectual property rights is granted by this document or by any conduct of Vishay. Product names and markings noted herein may be trademarks of their respective owners.

© 2025 VISHAY INTERTECHNOLOGY, INC. ALL RIGHTS RESERVED

THIS DOCUMENT IS SUBJECT TO CHANGE WITHOUT NOTICE. THE PRODUCTS DESCRIBED HEREIN AND THIS DOCUMENT ARE SUBJECT TO SPECIFIC DISCLAIMERS, SET FORTH AT www.vishay.com/doc?91000

Looking for pricing, stock, or lifecycle information?

Click below to explore more details on WIN SOURCE:

- View MAL211892159E3 on WIN SOURCE
- Vishay Information

Optimize Your Supply Chain with WIN SOURCE Solutions

- Global Sourcing Solution
- Obsolete Management
- Cost Control Management
- Shortage Management
- Alternative Solution
- Excess Inventory Management