THE DATASHEET OF

T59EE226M050C0100

vPolyTan™ Polymer Surface-Mount Chip Capacitors, Low ESR, Leadframeless Molded Type

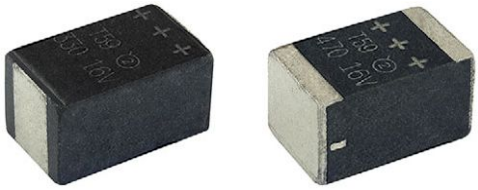

FEATURES

- Ultra low ESR
- 100 % surge current tested
- Accelerated voltage conditioning
- High ripple current capability
- Stable capacitance over operating temperature, voltage, and frequency range
- No wear out effect
- Molded case 7343 EIA size and stacks
  The molding compound has been selected to meet the requirements of UL 94 V-0 and outgassing requirements of ASTM E-595
- Terminations:
  all cases (except EL): 3-sided wraparound
  Metallization areas on the left and right sides of the capacitor are not subject for inspection.
  EL-case: L-shape compatible with standard molded chip J-style termination
- 12 mm tape and 7" (178 mm) reel packaging per EIA-481 standard
- Material categorization: for definitions of compliance please see www.vishay.com/doc?99912

Pb-free Available
RoHS* Available
HALOGEN FREE Available
GREEN (5-2008) Available

Note
* This datasheet provides information about parts that are RoHS-compliant and / or parts that are non RoHS-compliant. For example, parts with lead (Pb) terminations are not RoHS-compliant. Please see the information / tables in this datasheet for details

LINKS TO ADDITIONAL RESOURCES

3D Models | SPICE Models | Calculators

PERFORMANCE / ELECTRICAL CHARACTERISTICS

Operating Temperature: -55 °C to +125 °C

Capacitance Range: 15 µF to 470 µF

Capacitance Tolerance: ± 10 %, ± 20 % standard

Voltage Rating: 16 V_{DC} to 75 V_{DC}

APPLICATIONS

- Decoupling, smoothing, filtering
- Bulk energy storage in Solid State Drives (SSD)
- Infrastructure equipment
- Storage and networking
- Computer motherboards
- Smartphones and tablets

ORDERING INFORMATION

T59	EE	337	M	016	C	0025
TYPE	CASE CODE	CAPACITANCE	CAPACITANCE TOLERANCE	DC VOLTAGE RATING	TERMINATION / PACKAGING	ESR
	See Ratings and Case Codes table.	This is expressed in picofarads. The first two digits are the significant figures. The third is the number of zeros to follow.	K = ± 10 % M = ± 20 %	This is expressed in volts. To complete the three-digit block, zeros precede the voltage rating. A decimal point is indicated by an "R" (6R3 = 6.3 V)	**E** = Sn / Pb solder / 7" (178 mm) reel **C** = 100 % tin / 7" (178 mm) reel	Maximum 100 kHz ESR in mΩ

Notes
- We reserve the right to supply higher voltage ratings and tighter capacitance tolerance capacitors in the same case size. Voltage substitutions will be marked with the higher voltage rating
- We reserve the right to supply better series with more extensive screening

For technical questions, contact: polytech@vishay.com
THIS DOCUMENT IS SUBJECT TO CHANGE WITHOUT NOTICE. THE PRODUCTS DESCRIBED HEREIN AND THIS DOCUMENT ARE SUBJECT TO SPECIFIC DISCLAIMERS, SET FORTH AT www.vishay.com/doc?91000

T59EE: DIMENSIONS in inches [millimeters]

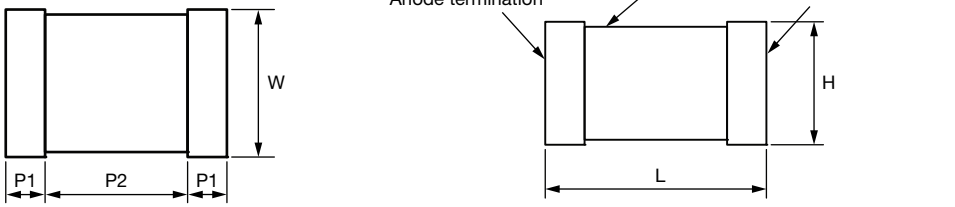

CASE CODE	EIA SIZE	H (MAX.)	L	W	P1	P2 (REF.)
EE	7343-43	0.169 [4.3]	0.287 ± 0.012 [7.3 ± 0.3]	0.169 ± 0.012 [4.3 ± 0.3]	0.051 ± 0.012 [1.3 ± 0.3]	0.191 [4.85]

T59EL: DIMENSIONS in inches [millimeters]

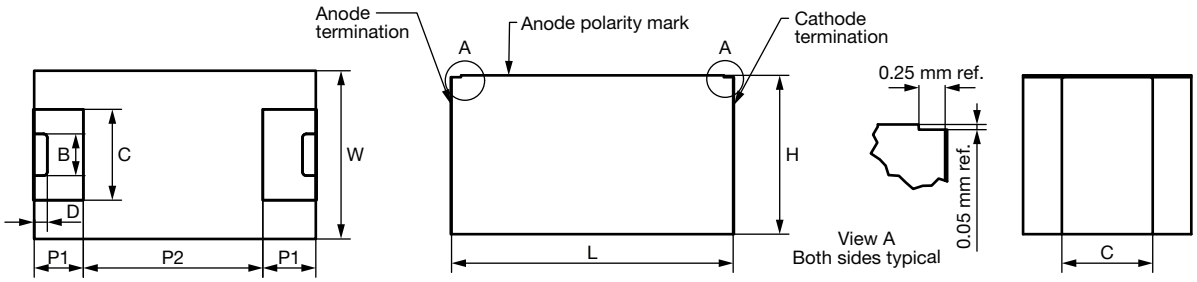

CASE CODE	EIA SIZE	H (MAX.)	L	W	P1	P2 (REF.)	C	B (REF.)	D (REF.)
EL	7343-43	0.169 [4.3]	0.287 ± 0.012 [7.3 ± 0.3]	0.169 ± 0.012 [4.3 ± 0.3]	0.051 ± 0.008 [1.3 ± 0.2]	0.191 [4.85]	0.094 ± 0.008 [2.4 ± 0.2]	0.043 [1.10]	0.014 [0.35]

RATINGS AND CASE CODES (ESR mΩ)

µF	16 V	30 V	35 V	50 V	63 V	75 V
15					EE (100), EL (100)	EE (100), EL (100)
22				EE (100), EL (100)	EE (100), EL (100)	EE (100), EL (100)
47			EE (70, 55), EL (70, 55)	EE (100, 70, 55), EL (100, 70, 55)		
150		EE (150, 75, 50), EL (150, 75, 50)	EE (100, 50), EL (100, 50)			
220	EE (25), EL (25)					
330	EE (25), EL (25)					
470	EE (25, 20), EL (25, 20)					

For technical questions, contact: polytech@vishay.com
THIS DOCUMENT IS SUBJECT TO CHANGE WITHOUT NOTICE. THE PRODUCTS DESCRIBED HEREIN AND THIS DOCUMENT ARE SUBJECT TO SPECIFIC DISCLAIMERS, SET FORTH AT www.vishay.com/doc?91000

MARKING

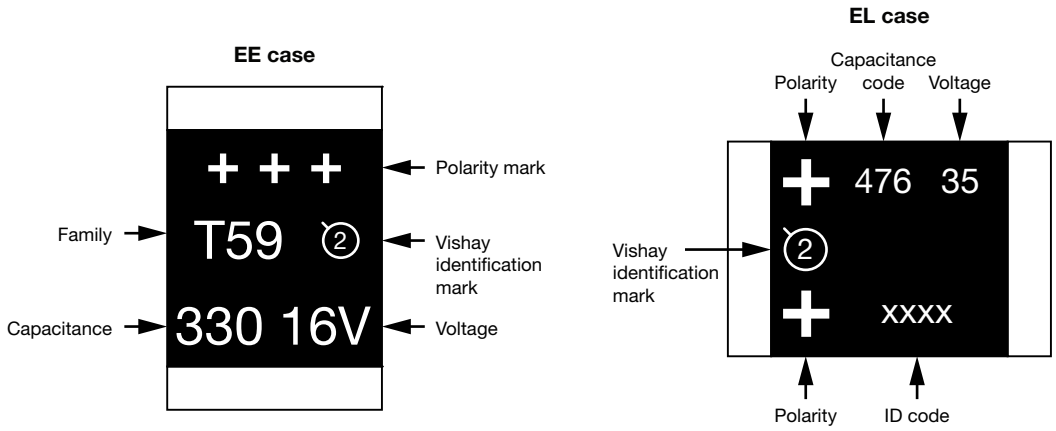

Note

- Capacitors may bear T54 marking scheme if parts are substituted with high rel COTS performance grade product. Call the factory for further explanation

STANDARD RATINGS

CAPACITANCE (µF)	CASE CODE	PART NUMBER	MAX. DCL AT +25 °C (µA)	MAX. DF AT +25 °C 120 Hz (%)	MAX. ESR AT +25 °C 100 kHz (mΩ)	MAX. RIPPLE, 100 kHz I_{RMS} (A)	HI TEMPERATURE LOAD		MSL
							TEMPERATURE (°C)	TIME (h)	
16 V_{DC} AT +105 °C; 10 V_{DC} AT +125 °C									
220	EE	T59EE227(1)016(2)0025	352	10	25	4.195	125	2000	3
220	EL	T59EL227(1)016(2)0025	352	10	25	4.195	125	2000	3
330	EE	T59EE337M016(2)0025	528	10	25	4.195	125	2000	3
330	EL	T59EL337M016(2)0025	528	10	25	4.195	125	2000	3
470	EE	T59EE477M016(2)0025	752	10	25	4.195	125	2000	3
470	EL	T59EL477M016(2)0025	752	10	25	4.195	125	2000	3
470	EE	T59EE477M016(2)0020	752	10	20	4.690	125	2000	3
470	EL	T59EL477M016(2)0020	752	10	20	4.690	125	2000	3
30 V_{DC} AT +105 °C; 20 V_{DC} AT +125 °C									
150	EE	T59EE157M030(2)0150	450	10	150	1.713	125	2000	3
150	EL	T59EL157M030(2)0150	450	10	150	1.713	125	2000	3
150	EE	T59EE157M030(2)0075	450	10	75	2.422	125	2000	3
150	EL	T59EL157M030(2)0075	450	10	75	2.422	125	2000	3
150	EE	T59EE157M030(2)0050	450	10	50	3.114	125	2000	3
150	EL	T59EL157M030(2)0050	450	10	50	3.114	125	2000	3
35 V_{DC} AT +105 °C; 23 V_{DC} AT +125 °C									
47	EE	T59EE476M035(2)0070	165	10	70	2.507	125	2000	3
47	EL	T59EL476M035(2)0070	165	10	70	2.507	125	2000	3
47	EE	T59EE476M035(2)0055	165	10	55	2.828	125	2000	3
47	EL	T59EL476M035(2)0055	165	10	55	2.828	125	2000	3
150	EE	T59EE157M035(2)0100	525	10	100	2.098	125	1000	3
150	EL	T59EL157M035(2)0100	525	10	100	2.098	125	1000	3
150	EE	T59EE157M035(2)0050	525	10	50	2.966	125	1000	3
150	EL	T59EE157M035(2)0050	525	10	50	2.966	125	1000	3

Note

- Part number definitions:
  (1) Capacitance tolerance: K, M
  (2) Termination and packaging: E, C

For technical questions, contact: polytech@vishay.com

THIS DOCUMENT IS SUBJECT TO CHANGE WITHOUT NOTICE. THE PRODUCTS DESCRIBED HEREIN AND THIS DOCUMENT ARE SUBJECT TO SPECIFIC DISCLAIMERS, SET FORTH AT www.vishay.com/doc?91000

STANDARD RATINGS

CAPACITANCE (µF)	CASE CODE	PART NUMBER	MAX. DCL AT +25 °C (µA)	MAX. DF AT +25 °C 120 Hz (%)	MAX. ESR AT +25 °C 100 kHz (mΩ)	MAX. RIPPLE, 100 kHz I_{RMS} (A)	HI TEMPERATURE LOAD TEMPERATURE (°C)	HI TEMPERATURE LOAD TIME (h)	MSL
50 V_{DC} AT +105 °C; 33 V_{DC} AT +125 °C									
22	EE	T59EE226M050(2)0100	110	10	100	2.098	125	1000	3
22	EL	T59EL226M050(2)0100	110	10	100	2.098	125	1000	3
47	EE	T59EE476M050(2)0100	235	10	100	2.098	125	2000	3
47	EL	T59EL476M050(2)0100	235	10	100	2.098	125	2000	3
47	EE	T59EE476M050(2)0070	235	10	70	2.507	125	2000	3
47	EL	T59EL476M050(2)0070	235	10	70	2.507	125	2000	3
47	EE	T59EE476M050(2)0055	235	10	55	2.828	105	2000	3
47	EL	T59EL476M050(2)0055	235	10	55	2.828	105	2000	3
63 V_{DC} AT +105 °C; 42 V_{DC} AT +125 °C									
15	EE	T59EE156M063(2)0100	95	10	100	2.098	125	2000	3
15	EL	T59EL156M063(2)0100	95	10	100	2.098	125	2000	3
22	EE	T59EE226M063(2)0100	139	10	100	2.098	125	1000	3
22	EL	T59EL226M063(2)0100	139	10	100	2.098	125	1000	3
75 V_{DC} AT +105 °C; 50 V_{DC} AT +125 °C									
15	EE	T59EE156M075(2)0100	113	10	100	2.098	125	2000	3
15	EL	T59EL156M075(2)0100	113	10	100	2.098	125	2000	3
22	EE	T59EE226M075(2)0100	165	12	100	2.098	125	1000	3
22	EL	T59EL226M075(2)0100	165	12	100	2.098	125	1000	3

Note

- Part number definitions:
  (1) Capacitance tolerance: K, M
  (2) Termination and packaging: E, C

RATED AND RECOMMENDED DERATED VOLTAGES VS. TEMPERATURE

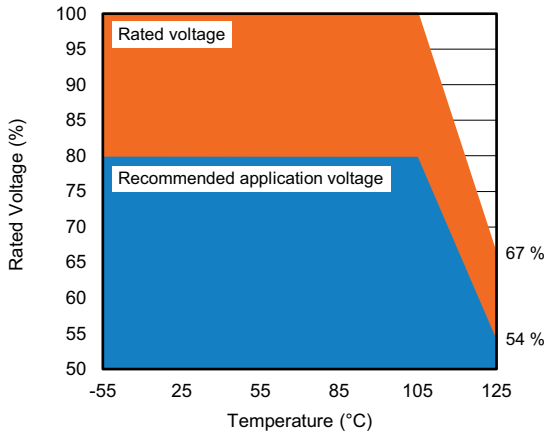

RECOMMENDED VOLTAGE DERATING GUIDELINES

CAPACITOR VOLTAGE RATING AT -55 °C TO +105 °C	CAPACITOR CATEGORY VOLTAGE AT +105 °C TO +125 °C	RECOMMENDED VOLTAGE DERATING AT -55 °C TO +105 °C	RECOMMENDED VOLTAGE DERATING AT +105 °C TO +125 °C
16	10	12.8	8.6
30	20	24	16.2
35	23	28	18.4
50	33	40	26.4
63	42	50	34
75	50	60	40.5

For technical questions, contact: polytech@vishay.com
THIS DOCUMENT IS SUBJECT TO CHANGE WITHOUT NOTICE. THE PRODUCTS DESCRIBED HEREIN AND THIS DOCUMENT ARE SUBJECT TO SPECIFIC DISCLAIMERS, SET FORTH AT www.vishay.com/doc?91000

CAPACITANCE VS. FREQUENCY

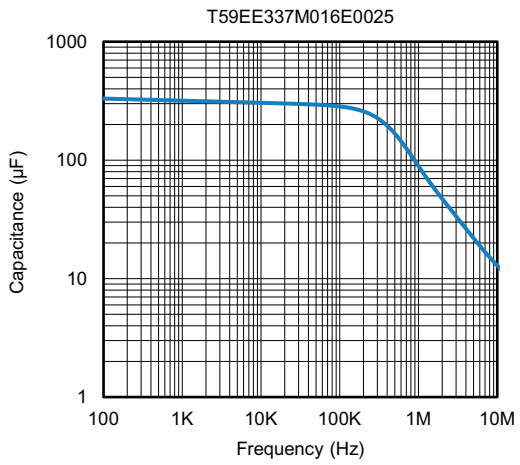

IMPEDANCE AND ESR VS. FREQUENCY

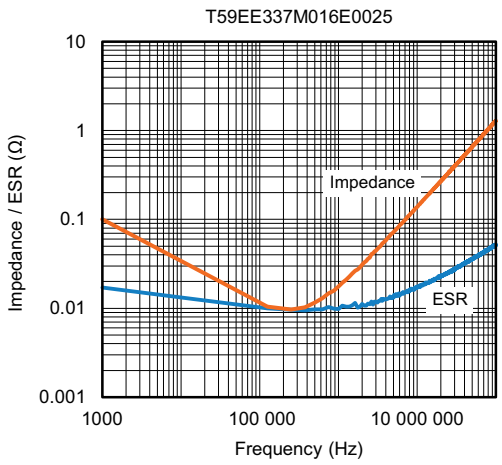

POWER DISSIPATION

CASE CODE	MAXIMUM PERMISSIBLE POWER DISSIPATION AT +45 °C (W) WITH +30 °C RISE IN FREE AIR
EE, EL	0.44

STANDARD PACKAGING QUANTITY

CASE CODE	UNITS PER 7" REEL
EE, EL	400

PERFORMANCE CHARACTERISTICS

ITEM	CONDITION	POST TEST PERFORMANCE	
Life test at +105 °C	2000 h application of rated voltage at 105 °C, MIL-STD-202 method 108	Capacitance change	Within ± 20 % of initial value
		Dissipation factor	Within initial limits
		Leakage current	Shall not exceed 300 % of initial limit
Life test at +125 °C	2000 h application of 2/3 rated voltage at 125 °C, MIL-STD-202 method 108	Capacitance change	Within ± 20 % of initial value
		Dissipation factor	Within 1.5 x initial
		Leakage current	Shall not exceed 300 % of initial limit
Shelf life test at +105 °C	2000 h no voltage applied at 105 °C, MIL-STD-202 method 108	Capacitance change	Within ± 20 % of initial value
		Dissipation factor	Within initial limits
		Leakage current	Shall not exceed 300 % of initial limit
Humidity tests	At 60 °C / 90 % RH 500 h, no voltage applied	Capacitance change	-20 % to +40 % of initial value
		Dissipation factor	Within initial limit
		Leakage current	Shall not exceed 300 % of initial limit

For technical questions, contact: polytech@vishay.com
THIS DOCUMENT IS SUBJECT TO CHANGE WITHOUT NOTICE. THE PRODUCTS DESCRIBED HEREIN AND THIS DOCUMENT ARE SUBJECT TO SPECIFIC DISCLAIMERS, SET FORTH AT www.vishay.com/doc?91000

PERFORMANCE CHARACTERISTICS			
ITEM	**CONDITION**	**POST TEST PERFORMANCE**	
Stability at low and high temperatures	-55 °C	Capacitance change	Within -20 % to 0 % of initial value
		Dissipation factor	Shall not exceed 150 % of initial limit
		Leakage current	n/a
	25 °C	Capacitance change	Within ± 20 % of initial value
		Dissipation factor	Within initial limit
		Leakage current	Within initial limit
	85 °C	Capacitance change	Within -0 % to +50 % of initial value
		Dissipation factor	Within initial limit
		Leakage current	Shall not exceed 1000 % of initial value
	105 °C	Capacitance change	Within -0 % to +50 % of initial value
		Dissipation factor	Within initial limits
		Leakage current	Shall not exceed 1000 % of initial limits
Surge voltage	85 °C, 1000 successive test cycles at 1.3 of rated voltage in series with a 33 Ω resistor at the rate of 30 s ON, 30 s OFF	Capacitance change	Within ± 20 % of initial value
		Dissipation factor	Within initial limit
		Leakage current	Shall not exceed 300 % of initial limit
Shock (specified pulse)	MIL-STD-202, method 213, condition E, 1000 *g* peak	Capacitance change	Within ± 20 % of initial value
		Dissipation factor	Within initial limit
		Leakage current	Shall not exceed 300 % of initial limit
Vibration	MIL-STD-202, method 204, condition D, 10 Hz to 2000 Hz 20 *g* peak	Capacitance change	Within ± 20 % of initial value
		Dissipation factor	Within initial limit
		Leakage current	Shall not exceed 300 % of initial limit
		There shall be no mechanical or visual damage to capacitors post-conditioning.	
Shear test	Apply a pressure load of 17.7 N for 10 s ± 1 s horizontally to the center of capacitor side body	Capacitance change	Within ± 20 % of initial value
		Dissipation factor	Within initial limit
		Leakage current	Shall not exceed 300 % of initial limit

PRODUCT INFORMATION	
Polymer Guide	www.vishay.com/doc?40076
Moisture Sensitivity	www.vishay.com/doc?40135
Infographic	www.vishay.com/doc?48084
Sample Board	www.vishay.com/doc?48073
FAQ	
Frequently Asked Questions	www.vishay.com/doc?42106

For technical questions, contact: polytech@vishay.com
THIS DOCUMENT IS SUBJECT TO CHANGE WITHOUT NOTICE. THE PRODUCTS DESCRIBED HEREIN AND THIS DOCUMENT ARE SUBJECT TO SPECIFIC DISCLAIMERS, SET FORTH AT www.vishay.com/doc?91000

Guide for Tantalum Solid Electrolyte Chip Capacitors With Polymer Cathode

INTRODUCTION

Tantalum electrolytic capacitors are the preferred choice in applications where volumetric efficiency, stable electrical parameters, high reliability, and long service life are primary considerations. The stability and resistance to elevated temperatures of the tantalum/tantalum oxide/manganese dioxide system make solid tantalum capacitors an appropriate choice for today's surface mount assembly technology.

Vishay Sprague has been a pioneer and leader in this field, producing a large variety of tantalum capacitor types for consumer, industrial, automotive, military, and aerospace electronic applications.

Tantalum is not found in its pure state. Rather, it is commonly found in a number of oxide minerals, often in combination with Columbium ore. This combination is known as “tantalite” when its contents are more than one-half tantalum. Important sources of tantalite include Australia, Brazil, Canada, China, and several African countries. Synthetic tantalite concentrates produced from tin slags in Thailand, Malaysia, and Brazil are also a significant raw material for tantalum production.

Electronic applications, and particularly capacitors, consume the largest share of world tantalum production. Other important applications for tantalum include cutting tools (tantalum carbide), high temperature super alloys, chemical processing equipment, medical implants, and military ordnance.

Vishay Sprague is a major user of tantalum materials in the form of powder and wire for capacitor elements and rod and sheet for high temperature vacuum processing.

THE BASICS OF TANTALUM CAPACITORS

Most metals form crystalline oxides which are non-protecting, such as rust on iron or black oxide on copper. A few metals form dense, stable, tightly adhering, electrically insulating oxides. These are the so-called “valve”metals and include titanium, zirconium, niobium, tantalum, hafnium, and aluminum. Only a few of these permit the accurate control of oxide thickness by electrochemical means. Of these, the most valuable for the electronics industry are aluminum and tantalum.

Capacitors are basic to all kinds of electrical equipment, from radios and television sets to missile controls and automobile ignitions. Their function is to store an electrical charge for later use.

Capacitors consist of two conducting surfaces, usually metal plates, whose function is to conduct electricity. They are separated by an insulating material or dielectric. The dielectric used in all tantalum electrolytic capacitors is tantalum pentoxide.

Tantalum pentoxide compound possesses high-dielectric strength and a high-dielectric constant. As capacitors are being manufactured, a film of tantalum pentoxide is applied to their electrodes by means of an electrolytic process. The film is applied in various thicknesses and at various voltages and although transparent to begin with, it takes on different colors as light refracts through it. This coloring occurs on the tantalum electrodes of all types of tantalum capacitors.

Rating for rating, tantalum capacitors tend to have as much as three times better capacitance/volume efficiency than aluminum electrolytic capacitors. An approximation of the capacitance/volume efficiency of other types of capacitors may be inferred from the following table, which shows the dielectric constant ranges of the various materials used in each type. Note that tantalum pentoxide has a dielectric constant of 26, some three times greater than that of aluminum oxide. This, in addition to the fact that extremely thin films can be deposited during the electrolytic process mentioned earlier, makes the tantalum capacitor extremely efficient with respect to the number of microfarads available per unit volume. The capacitance of any capacitor is determined by the surface area of the two conducting plates, the distance between the plates, and the dielectric constant of the insulating material between the plates.

COMPARISON OF CAPACITOR DIELECTRIC CONSTANTS

DIELECTRIC	e DIELECTRIC CONSTANT
Air or vacuum	1.0
Paper	2.0 to 6.0
Plastic	2.1 to 6.0
Mineral oil	2.2 to 2.3
Silicone oil	2.7 to 2.8
Quartz	3.8 to 4.4
Glass	4.8 to 8.0
Porcelain	5.1 to 5.9
Mica	5.4 to 8.7
Aluminum oxide	8.4
Tantalum pentoxide	**26**
Ceramic	12 to 400K

In the tantalum electrolytic capacitor, the distance between the plates is very small since it is only the thickness of the tantalum pentoxide film. As the dielectric constant of the tantalum pentoxide is high, the capacitance of a tantalum capacitor is high if the area of the plates is large:

$$C = \frac{eA}{t}$$

where

C = capacitance

e = dielectric constant

A = surface area of the dielectric

t = thickness of the dielectric

Tantalum capacitors contain either liquid or solid electrolytes. In solid electrolyte capacitors, a dry material (manganese dioxide) forms the cathode plate. A tantalum lead is embedded in or welded to the pellet, which is in turn connected to a termination or lead wire. The drawings show the construction details of the surface mount types of tantalum capacitors shown in this catalog.

For technical questions, contact: polytech@vishay.com

THIS DOCUMENT IS SUBJECT TO CHANGE WITHOUT NOTICE. THE PRODUCTS DESCRIBED HEREIN AND THIS DOCUMENT ARE SUBJECT TO SPECIFIC DISCLAIMERS, SET FORTH AT www.vishay.com/doc?91000

SOLID ELECTROLYTE POLYMER TANTALUM CAPACITORS

Solid electrolyte polymer capacitors utilize sintered tantalum pellets as anodes. Tantalum pentoxide dielectric layer is formed on the entire surface of anode, which is further impregnated with highly conductive polymer as cathode system.

The conductive polymer layer is then coated with graphite, followed by a layer of metallic silver, which provides a conductive surface between the capacitor element and the outer termination (lead frame or other).

Molded chip polymer tantalum capacitor encases the element in plastic resins, such as epoxy materials. The molding compound has been selected to meet the requirements of UL 94 V-0 and outgassing requirements of ASTM E-595. After assembly, the capacitors are tested and inspected to assure long life and reliability. It offers excellent reliability and high stability for variety of applications in electronic devices. Usage of conductive polymer cathode system provides very low equivalent series resistance (ESR), which makes the capacitors particularly suitable for high frequency applications.

TANTALUM CAPACITOR WITH POLYMER CATHODE TYPE T50 / T51 / T55 / T56 / 04051

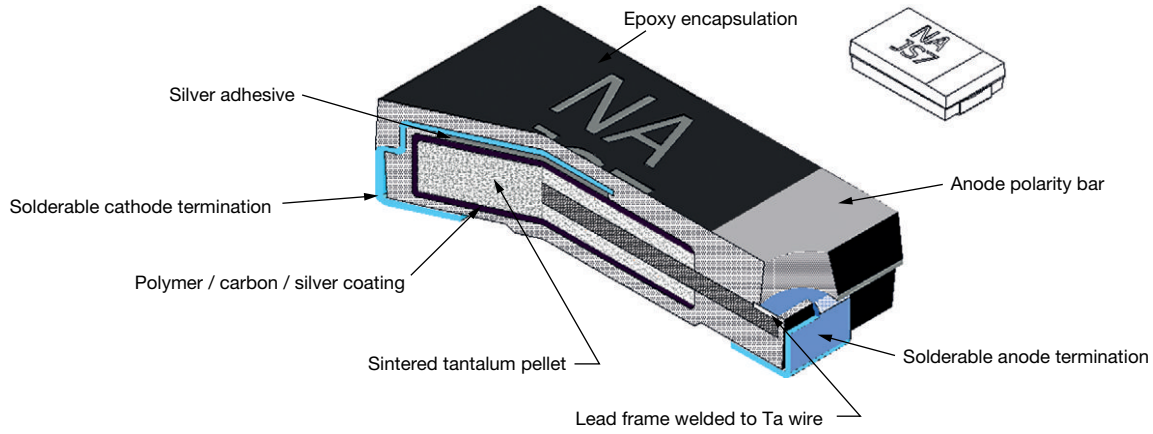

TANTALUM CAPACITOR WITH POLYMER CATHODE TYPE T58

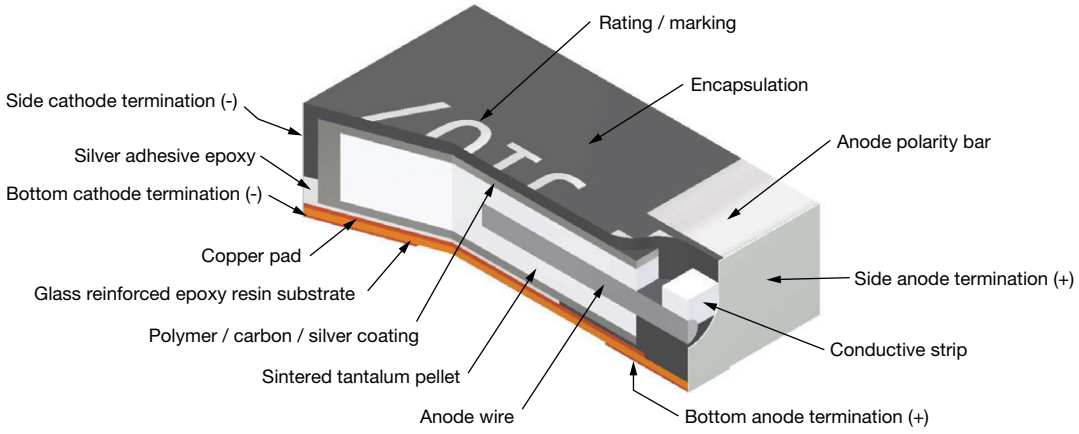

For technical questions, contact: polytech@vishay.com
THIS DOCUMENT IS SUBJECT TO CHANGE WITHOUT NOTICE. THE PRODUCTS DESCRIBED HEREIN AND THIS DOCUMENT ARE SUBJECT TO SPECIFIC DISCLAIMERS, SET FORTH AT www.vishay.com/doc?91000

TANTALUM CAPACITOR WITH POLYMER CATHODE TYPE T52

T52 E5 case

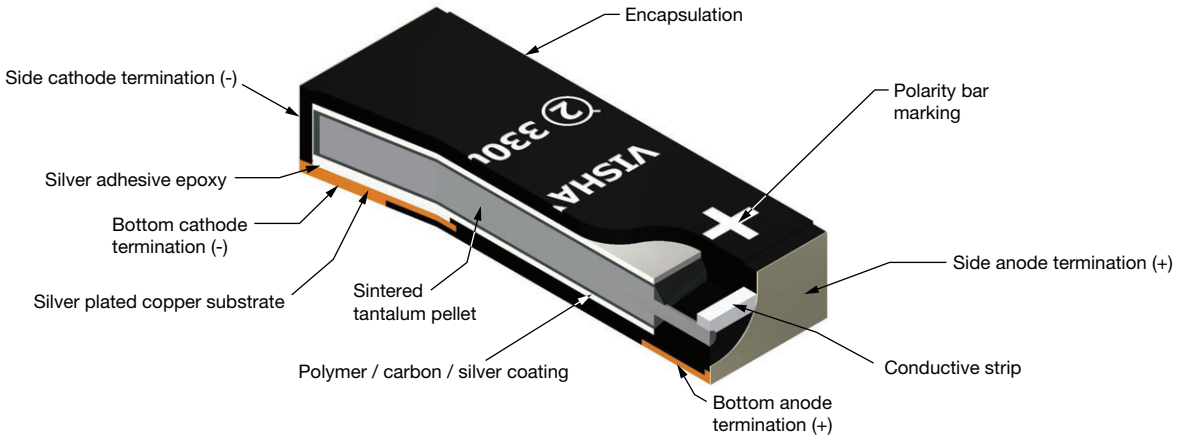

T52 M1 case

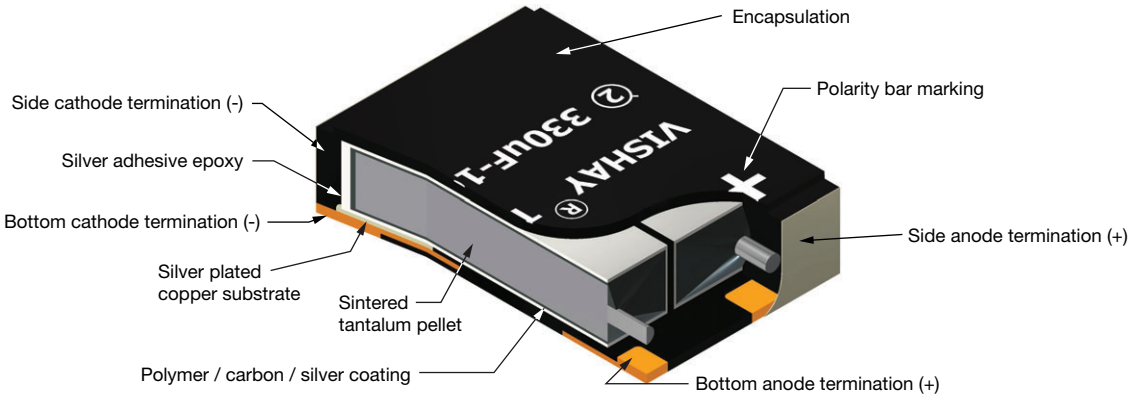

For technical questions, contact: polytech@vishay.com
THIS DOCUMENT IS SUBJECT TO CHANGE WITHOUT NOTICE. THE PRODUCTS DESCRIBED HEREIN AND THIS DOCUMENT ARE SUBJECT TO SPECIFIC DISCLAIMERS, SET FORTH AT www.vishay.com/doc?91000

TANTALUM CAPACITOR WITH POLYMER CATHODE TYPE T54 / T59 / 20021

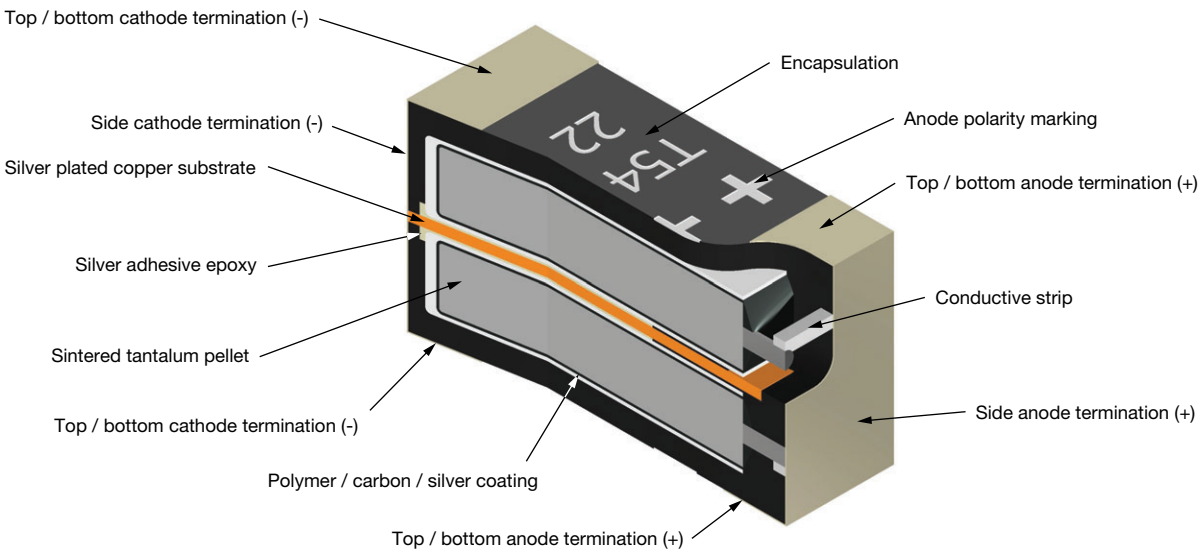

T54 EL case

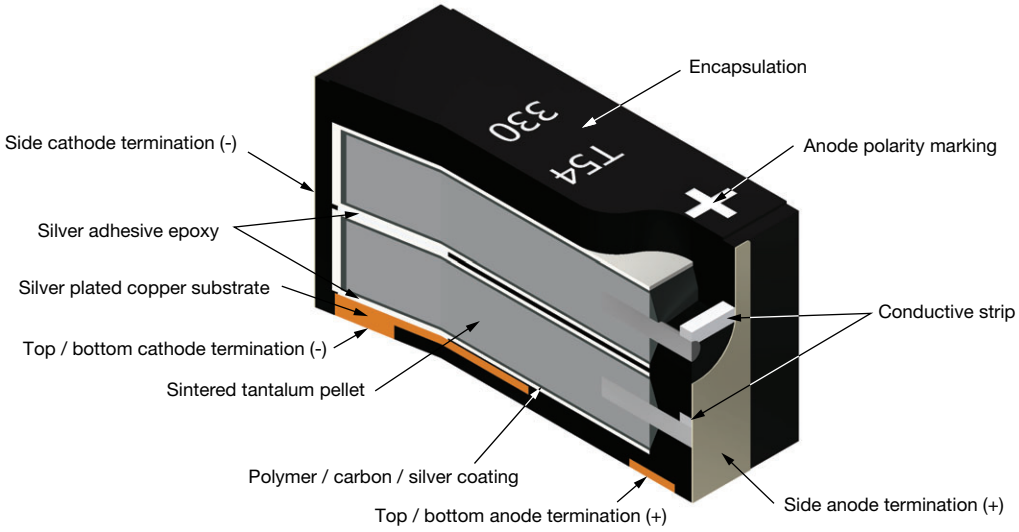

For technical questions, contact: polytech@vishay.com
THIS DOCUMENT IS SUBJECT TO CHANGE WITHOUT NOTICE. THE PRODUCTS DESCRIBED HEREIN AND THIS DOCUMENT ARE SUBJECT TO SPECIFIC DISCLAIMERS, SET FORTH AT www.vishay.com/doc?91000

HERMETICALLY SEALED TANTALUM CAPACITOR WITH POLYMER CATHODE TYPE T27

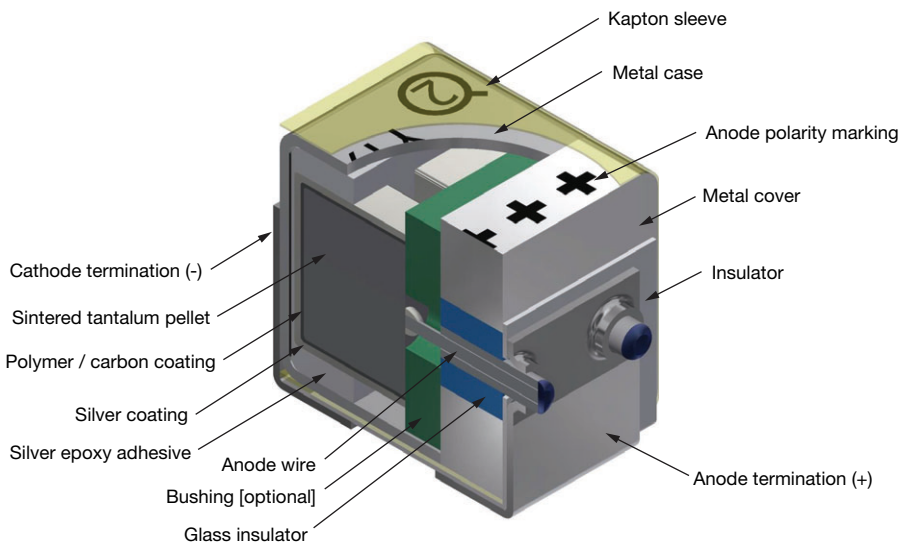

POLYMER CAPACITORS - METAL CASE, HERMETICALLY SEALED

SERIES	T27
PRODUCT IMAGE	
TYPE	VPolyTan™ hermetically sealed polymer surface-mount chip capacitors, low ESR
FEATURES	Hermetically sealed in metal case, low ESR / low DCL, hi-rel. processing
TEMPERATURE RANGE	-55 °C to +125 °C
CAPACITANCE RANGE	15 µF to 470 µF
VOLTAGE RANGE	16 V to 75 V
CAPACITANCE TOLERANCE	± 20 %
LEAKAGE CURRENT	0.05 CV
DISSIPATION FACTOR	12 %
ESR	25 mΩ to 100 mΩ
CASE SIZES	D
TERMINATION FINISH	100 % tin; tin / lead

For technical questions, contact: polytech@vishay.com
THIS DOCUMENT IS SUBJECT TO CHANGE WITHOUT NOTICE. THE PRODUCTS DESCRIBED HEREIN AND THIS DOCUMENT ARE SUBJECT TO SPECIFIC DISCLAIMERS, SET FORTH AT www.vishay.com/doc?91000

POLYMER CAPACITORS - MOLDED CASE		
SERIES	**T50, T51, T55, T56**	**04051**
PRODUCT IMAGE		
TYPE	VPolyTan™, molded case, high performance polymer	VPolyTan™, molded case, high performance polymer
FEATURES	High performance	High performance
TEMPERATURE RANGE	-55 °C to +105 °C / +125 °C	-55 °C to +125 °C (above +105 °C, voltage derating is required)
CAPACITANCE RANGE	3.3 µF to 1000 µF	4.7 µF to 680 µF
VOLTAGE RANGE	2.5 V to 63 V	2.5 V to 63 V
CAPACITANCE TOLERANCE	± 20 %	± 10 %, ± 20 %
LEAKAGE CURRENT	0.1 CV	0.1 CV
DISSIPATION FACTOR	8 % to 10 %	8 % to 10 %
ESR	6 mΩ to 500 mΩ	25 mΩ to 125 mΩ
CASE SIZES	J, P, A, T, B, Z, V, D, C	B, D
TERMINATION FINISH	Cases J, P, C: 100 % tin Case A, T, B, Z, V, D: Ni / Pd / Au	All cases: tin / lead (SnPb)

POLYMER CAPACITORS - LEADFRAMELESS MOLDED CASE					
SERIES	**T52**	**T58**	**T59**	**T54**	**20021**
PRODUCT IMAGE		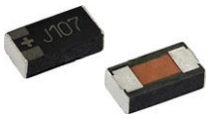	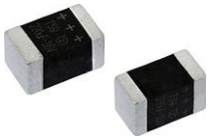		
TYPE	vPolyTan™ polymer surface mount chip capacitors, low profile, leadframeless molded type	vPolyTan™ polymer surface mount chip capacitors, compact, leadframeless molded type	vPolyTan™ polymer surface mount chip capacitors, low ESR, leadframeless molded type	vPolyTan™ polymer surface mount chip capacitors, low ESR, leadframeless molded type, hi-rel commercial off-the-shelf (COTS)	vPolyTan™ polymer surface mount chip capacitors, low ESR, leadframeless molded type, DLA approved
FEATURES	Low profile	Small case size	Multianode	Hi-rel COTS, multianode	Multianode
TEMPERATURE RANGE	-55 °C to +105 °C	-55 °C to +105 °C	-55 °C to +125 °C	-55 °C to +125 °C	-55 °C to +125 °C
CAPACITANCE RANGE	47 µF to 470 µF	1 µF to 100 µF	15 µF to 470 µF	15 µF to 470 µF (discrete capacitors) 30 µF to 2800 µF (stacked capacitors)	15 µF to 470 µF (discrete capacitors) 30 µF to 2800 µF (stacked capacitors)
VOLTAGE RANGE	10 V to 35 V	6.3 V to 35 V	16 V to 75 V	16 V to 75 V	16 V to 75 V
CAPACITANCE TOLERANCE	± 20 %	± 20 %	± 10 %, ± 20 %	± 20 %	± 20 %
LEAKAGE CURRENT	0.1 CV				
DISSIPATION FACTOR	10 %	8 % to 14 %	10 % to 12 %	10 % to 12 %	10 % to 12 %
ESR	40 mΩ to 200 mΩ	90 mΩ to 500 mΩ	20 mΩ to 150 mΩ	5 mΩ to 150 mΩ	5 mΩ to 150 mΩ
CASE SIZES	E5, M1, M9, B2	MM, W0, W9, A0, BB	EE, EL	EE, EL, E2, E3, E4, E6, 3E, 6E	EE, E2, E3, E4, E6, 3E, 6E
TERMINATION	100 % tin		100 % tin; tin / lead		Tin / lead

For technical questions, contact: polytech@vishay.com
THIS DOCUMENT IS SUBJECT TO CHANGE WITHOUT NOTICE. THE PRODUCTS DESCRIBED HEREIN AND THIS DOCUMENT ARE SUBJECT TO SPECIFIC DISCLAIMERS, SET FORTH AT www.vishay.com/doc?91000

MOLDED CAPACITORS, T50 / T51 / T55 / T56 / 04051 TYPES

PLASTIC TAPE AND REEL PACKAGING DIMENSIONS in millimeters

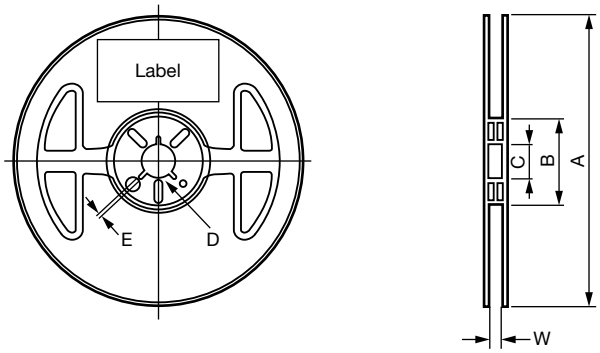

TAPE WIDTH	8	12
A + 0 / - 3	Ø 180	
B + 1 / 0	Ø 60	
C ± 0.2	Ø 13	
D ± 0.5	Ø 21	
E ± 0.5	2.0	
W ± 0.3	9.0	13.0

Note

- A reel diameter of 330 mm is also applicable

PLASTIC TAPE SIZE DIMENSIONS in millimeters

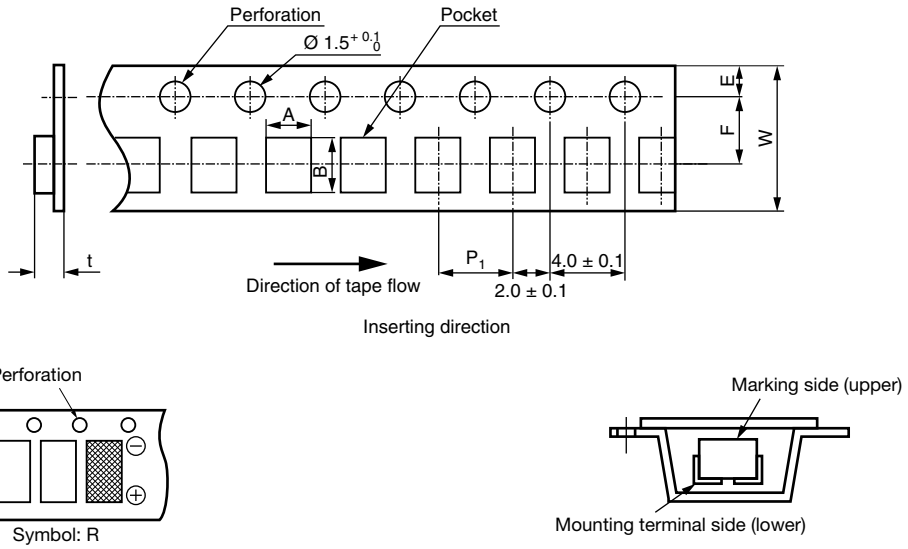

CASE CODE	A ± 0.2	B ± 0.2	W ± 0.3	F ± 0.1	E ± 0.1	P_1 ± 0.1	$t_{max.}$
J	1.0	1.8	8.0	3.5	1.75	4.0	1.3
P	1.4	2.2	8.0	3.5	1.75	4.0	1.6
A	1.9	3.5	8.0	3.5	1.75	4.0	2.5
T	3.1	3.8	8.0	3.5	1.75	4.0	1.7
B	3.1	3.8	8.0	3.5	1.75	4.0	2.5
C	3.7	6.3	12.0	5.5	1.75	8.0	3.1
Z	4.8	7.7	12.0	5.5	1.75	8.0	2.6
V	4.8	7.7	12.0	5.5	1.75	8.0	2.6
D	4.8	7.7	12.0	5.5	1.75	8.0	3.4

Note

- A reel diameter of 330 mm is also applicable

For technical questions, contact: polytech@vishay.com

THIS DOCUMENT IS SUBJECT TO CHANGE WITHOUT NOTICE. THE PRODUCTS DESCRIBED HEREIN AND THIS DOCUMENT ARE SUBJECT TO SPECIFIC DISCLAIMERS, SET FORTH AT www.vishay.com/doc?91000

LEADFRAMELESS MOLDED CAPACITORS, ALL TYPES

PLASTIC TAPE AND REEL PACKAGING in inches [millimeters]

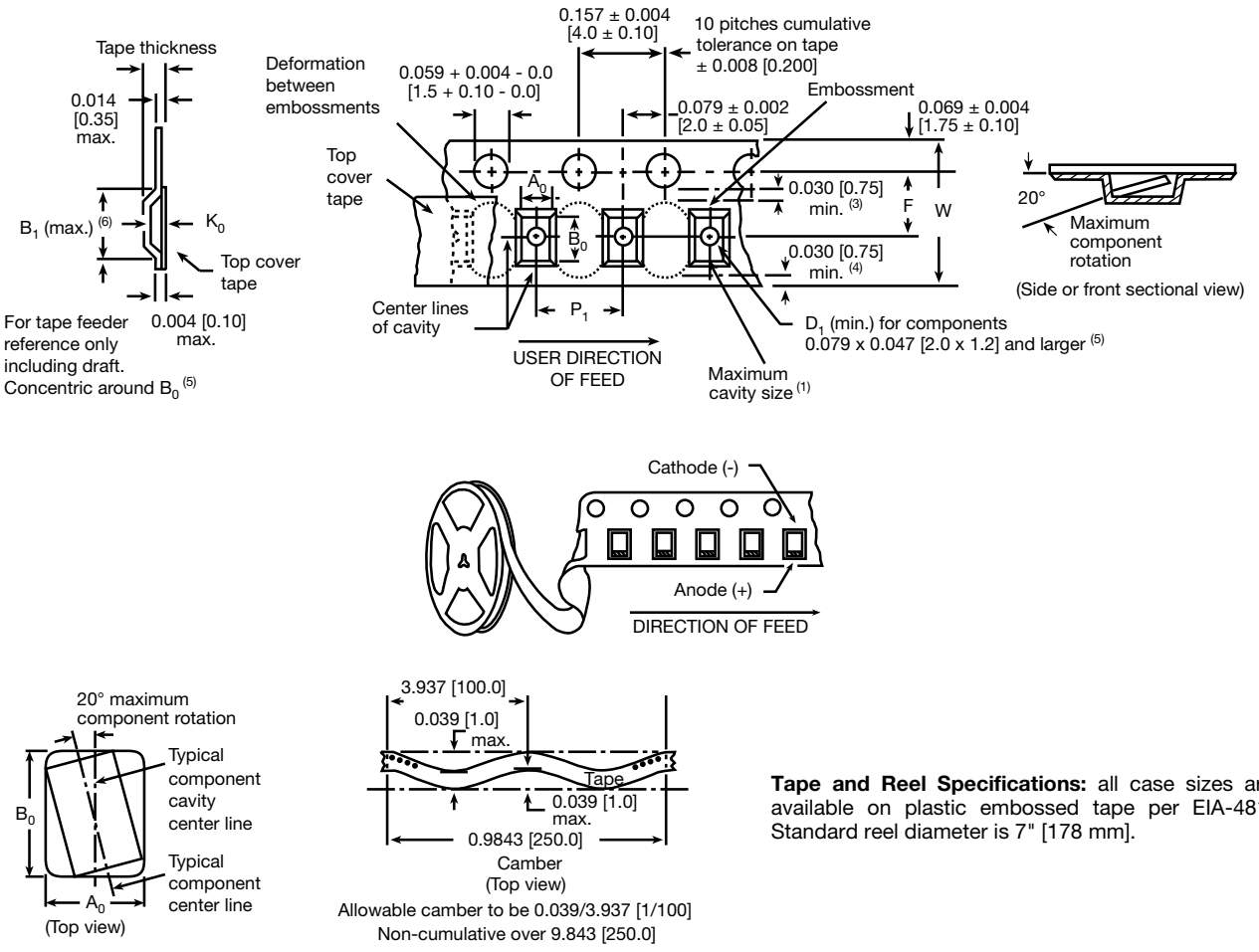

Tape and Reel Specifications: all case sizes are available on plastic embossed tape per EIA-481. Standard reel diameter is 7" [178 mm].

Notes

- Metric dimensions will govern. Dimensions in inches are rounded and for reference only

(1) A_0, B_0, K_0, are determined by the maximum dimensions to the ends of the terminals extending from the component body and / or the body dimensions of the component. The clearance between the ends of the terminals or body of the component to the sides and depth of the cavity (A_0, B_0, K_0) must be within 0.002" (0.05 mm) minimum and 0.020" (0.50 mm) maximum. The clearance allowed must also prevent rotation of the component within the cavity of not more than 20°

(2) Tape with components shall pass around radius “R” without damage. The minimum trailer length may require additional length to provide “R” minimum for 12 mm embossed tape for reels with hub diameters approaching N minimum

(3) This dimension is the flat area from the edge of the sprocket hole to either outward deformation of the carrier tape between the embossed cavities or to the edge of the cavity whichever is less

(4) This dimension is the flat area from the edge of the carrier tape opposite the sprocket holes to either the outward deformation of the carrier tape between the embossed cavity or to the edge of the cavity whichever is less

(5) The embossed hole location shall be measured from the sprocket hole controlling the location of the embossment. Dimensions of embossment location shall be applied independent of each other

(6) B_1 dimension is a reference dimension tape feeder clearance only

For technical questions, contact: polytech@vishay.com

THIS DOCUMENT IS SUBJECT TO CHANGE WITHOUT NOTICE. THE PRODUCTS DESCRIBED HEREIN AND THIS DOCUMENT ARE SUBJECT TO SPECIFIC DISCLAIMERS, SET FORTH AT www.vishay.com/doc?91000

CARRIER TAPE DIMENSIONS in inches [millimeters]

CASE CODE	TAPE SIZE	B_1 (MAX.) (1)	D_1 (MIN.)	F	K_0 (MAX.)	P_1	P_2	W
E5	12 mm	0.329 [8.35]	0.059 [1.5]	0.217 ± 0.002 [5.50 ± 0.05]	0.071 [1.8]	0.315 ± 0.004 [8.0 ± 0.10]	0.079 ± 0.002 [2.00 ± 0.05]	0.476 ± 0.008 [12.1 ± 0.20]
MM (2)	8 mm	0.075 [1.91]	0.02 [0.5]	0.138 [3.5]	0.043 [1.10]	0.157 [4.0]	0.079 ± 0.002 [2.00 ± 0.05]	0.315 [8.0]
M1, M9	12 mm	0.32 [8.2]	0.059 [1.5]	0.217 ± 0.002 [5.5 ± 0.05]	0.094 [2.39]	0.315 ± 0.04 [8.0 ± 1.0]	0.079 ± 0.002 [2.00 ± 0.05]	0.472 + 0.012 / - 0.004 [12.0 + 0.3 / - 0.10]
W9	8 mm	0.126 [3.20]	0.030 [0.75]	0.138 [3.5]	0.045 [1.15]	0.157 [4.0]	0.079 ± 0.002 [2.00 ± 0.05]	0.315 [8.0]
W0	8 mm	0.126 [3.20]	0.030 [0.75]	0.138 [3.5]	0.045 [1.15]	0.157 [4.0]	0.079 ± 0.002 [2.00 ± 0.05]	0.315 [8.0]
A0	8 mm	-	0.02 [0.5]	0.138 [3.5]	0.049 [1.25]	0.157 [4.0]	0.079 ± 0.002 [2.00 ± 0.05]	0.315 [8.0]
BB	8 mm	0.157 [4.0]	0.039 [1.0]	0.138 [3.5]	0.087 [2.22]	0.157 [4.0]	0.079 ± 0.002 [2.00 ± 0.05]	0.315 [8.0]
EE, EL	12 mm	0.32 [8.2]	0.059 [1.5]	0.217 ± 0.002 [5.5 ± 0.05]	0.175 [4.44]	0.315 ± 0.04 [8.0 ±1.0]	0.079 ± 0.002 [2.00 ± 0.05]	0.472 + 0.012 / - 0.004 [12.0 + 0.3 / - 0.10]
B2	8 mm	0.157 [4.0]	0.039 [1.0]	0.138 [3.5]	0.057 [1.45]	0.157 [4.0]	0.079 ± 0.002 [2.00 ± 0.05]	0.315 [8.0]
D (3)	16 mm	0.321 [8.16]	0.059 [1.5]	0.295 ± 0.004 [7.50 ± 0.1]	0.308 [7.83]	0.472 ± 0.004 [12.00 ± 0.1]	0.079 ± 0.004 [2.00 ± 0.1]	0.630 ± 0.012 [16.00 ± 0.3]

Notes

(1) For reference only

(2) Standard packaging of MM case is with paper tape. Plastic tape is available per request

(3) Tape thickness 0.018 [0.45] max.

PAPER TAPE AND REEL PACKAGING DIMENSIONS in inches [millimeters]

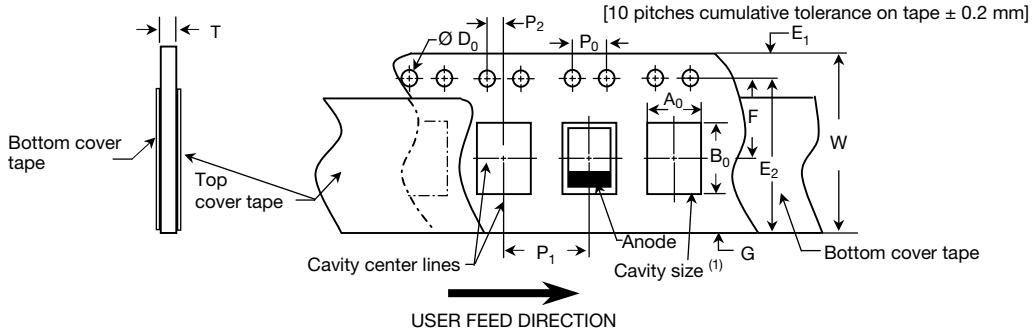

CASE SIZE	TAPE SIZE	A_0	B_0	D_0	P_0	P_1	P_2	E	F	W	T
MM	8 mm	0.041 ± 0.002 [1.05 ± 0.05]	0.071 ± 0.002 [1.8 ± 0.05]	0.06 ± 0.004 [1.5 ± 0.1]	0.157 ± 0.004 [4.0 ± 0.1]	0.157 ± 0.004 [4.0 ± 0.1]	0.079 ± 0.002 [2.0 ± 0.05]	0.069 ± 0.004 [1.75 ± 0.1]	0.0138 ± 0.002 [3.5 ± 0.05]	0.315 ± 0.008 [8.0 ± 0.2]	0.037 ± 0.002 [0.95 ± 0.05]
M0	8 mm	0.049 ± 0.002 [1.25 ± 0.05]	0.081 ± 0.002 [2.05 ± 0.05]	0.06 ± 0.004 [1.5 ± 0.1]	0.157 ± 0.004 [4.0 ± 0.1]	0.157 ± 0.004 [4.0 ± 0.1]	0.079 ± 0.002 [2.0 ± 0.05]	0.069 ± 0.004 [1.75 ± 0.1]	0.0138 ± 0.002 [3.5 ± 0.05]	0.315 ± 0.008 [8.0 ± 0.2]	0.041 ± 0.002 [1.05 ± 0.05]

Note

(1) A_0, B_0 are determined by the maximum dimensions to the ends of the terminals extending from the component body and / or the body dimensions of the component. The clearance between the ends of the terminals or body of the component to the sides and depth of the cavity (A_0, B_0) must be within 0.002" (0.05 mm) minimum and 0.020" (0.50 mm) maximum. The clearance allowed must also prevent rotation of the component within the cavity of not more than 20°

For technical questions, contact: polytech@vishay.com

THIS DOCUMENT IS SUBJECT TO CHANGE WITHOUT NOTICE. THE PRODUCTS DESCRIBED HEREIN AND THIS DOCUMENT ARE SUBJECT TO SPECIFIC DISCLAIMERS, SET FORTH AT www.vishay.com/doc?91000

PACKING AND STORAGE

Polymer capacitors meet moisture sensitivity level rating (MSL) of 3 or 4 as specified in IPC/JEDEC® J-STD-020 and are dry packaged in moisture barrier bags (MBB) per J-STD-033. MSL for each particular family is defined in the datasheet - either in “Features” section or “Standard Ratings” table. Level 3 specifies a floor life (out of bag) of 168 hours and level 4 specifies a floor life of 72 hours at 30 °C maximum and 60 % relative humidity (RH). Unused capacitors should be re-sealed in the MBB with fresh desiccant. A moisture strip (humidity indicator card) is included in the bag to assure dryness. To remove excess moisture, capacitors can be dried at 40 °C (standard “dry box” conditions).

For detailed recommendations please refer to J-STD-033.

RECOMMENDED REFLOW PROFILES

Vishay recommends no more than 3 cycles of reflow in accordance with J-STD-020.

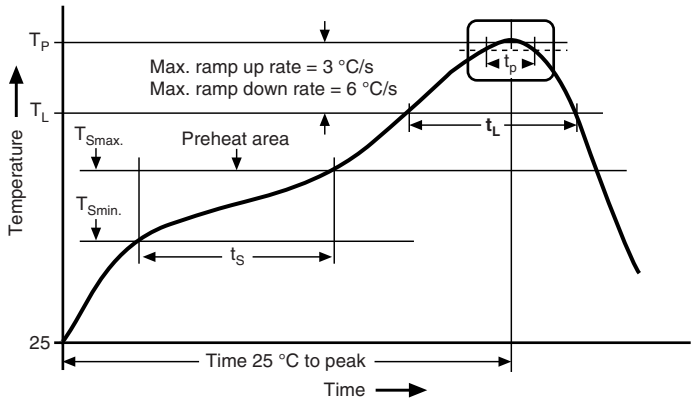

PROFILE FEATURE	SnPb EUTECTIC ASSEMBLY	LEAD (Pb)-FREE ASSEMBLY
PREHEAT AND SOAK		
Temperature min. ($T_{Smin.}$)	100 °C	150 °C
Temperature max. ($T_{Smax.}$)	150 °C	200 °C
Time (t_S) from ($T_{Smin.}$ to $T_{Smax.}$)	60 s to 120 s	60 s to 120 s
RAMP UP		
Ramp-up rate (T_L to T_p)	3 °C/s maximum	
Liquidus temperature (T_L)	183 °C	217 °C
Time (t_L) maintained above T_L	60 s to 150 s	
Peak package body temperature (T_p) max.	Depends on type and case - see table below	
Time (t_p) within 5 °C of the peak max. temperature	20 s	5 s (1)
RAMP DOWN		
Ramp-down rate (T_p to T_L)	6 °C/s maximum	
Time from 25 °C to peak temperature	6 min maximum	8 min maximum

Note

(1) For T27, lead (Pb)-free capacitors t_p = 30 s

PEAK PACKAGE BODY TEMPERATURE (T_p) MAXIMUM

TYPE	CASE CODE	PEAK PACKAGE BODY TEMPERATURE (T_P) MAX.	
		SnPb EUTECTIC ASSEMBLY	LEAD (Pb)-FREE ASSEMBLY
T27	D	220 °C	245 °C
T55	J, P, A, T, B, C, Z, V, D	n/a	260 °C
T52	E5, M1, M9, B2		260 °C
T58	MM, W9, W0, A0, BB		260 °C
T50	D		260 °C
T51	D, V		260 °C
T56	B, D, V		250 °C
T59	EE, EL	220 °C	250 °C
T54	EL, 3E, 6E, EE, E2, E3, E4, E6	220 °C	250 °C
20021	3E, 6E, EE, E2, E3, E4, E6	220 °C	n/a
04051	B, D	220 °C	n/a

Notes

- T50, T51, T52, T55, T56, and T58 capacitors are process sensitive.
  PSL classification to JEDEC J-STD-075: R4G
- T54 and T59 capacitors with 100 % tin termination are process sensitive.
  PSL classification to JEDEC J-STD-075: R6G

For technical questions, contact: polytech@vishay.com
THIS DOCUMENT IS SUBJECT TO CHANGE WITHOUT NOTICE. THE PRODUCTS DESCRIBED HEREIN AND THIS DOCUMENT ARE SUBJECT TO SPECIFIC DISCLAIMERS, SET FORTH AT www.vishay.com/doc?91000

MOLDED CAPACITORS, T50 / T51 / T55 / T56 / 04051 TYPES

PAD DIMENSIONS in millimeters

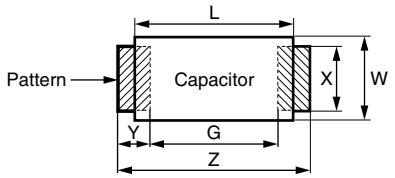

CASE / DIMENSIONS	CAPACITOR SIZE		PAD DIMENSIONS			
	L	W	G (max.)	Z (min.)	X (min.)	Y (Ref.)
J	1.6	0.8	0.7	2.5	1.0	0.9
P	2.0	1.25	0.5	2.6	1.2	1.05
A	3.2	1.6	1.1	3.8	1.5	1.35
T / B	3.5	2.8	1.4	4.1	2.7	1.35
C	5.8	3.2	2.9	6.9	2.7	2.0
Z / V / D	7.3	4.3	4.1	8.2	2.9	2.05

LEADFRAMELESS MOLDED CAPACITORS T52 / T58

PAD DIMENSIONS in inches [millimeters]

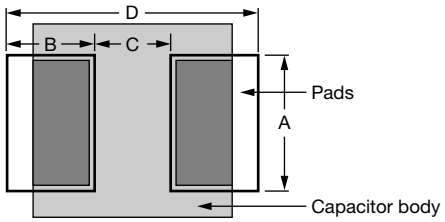

FAMILY	CASE CODE	A (NOM.)	B (MIN.)	C (NOM.)	D (MIN.)
T52	E5	0.094 [2.40]	0.077 [1.95]	0.180 [4.57]	0.333 [8.46]
	M1, M9	0.178 [4.52]	0.098 [2.48]	0.138 [3.50]	0.333 [8.46]
	B2	0.081 [2.06]	0.057 [1.44]	0.070 [1.77]	0.183 [4.64]
T58	MM	0.024 [0.61]	0.027 [0.70]	0.025 [0.64]	0.080 [2.03]
	W0, W9	0.035 [0.89]	0.029 [0.74]	0.041 [1.05]	0.099 [2.52]
	A0	0.047 [1.19]	0.042 [1.06]	0.065 [1.65]	0.148 [3.76]
	BB	0.094 [2.39]	0.044 [1.11]	0.072 [1.82]	0.159 [4.03]

LEADFRAMELESS MOLDED CAPACITORS T59 / T54 / 20021

PAD DIMENSIONS in inches [millimeters]

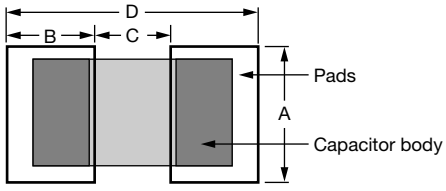

FAMILY	CASE CODE	A (NOM.)	B (MIN.)	C (NOM.)	D (MIN.)
T59 / T54	EE	0.209 [5.30]	0.098 [2.50]	0.169 [4.30]	0.366 [9.30]
	EL	0.098 [2.50]	0.098 [2.50]	0.169 [4.30]	0.366 [9.30]
T54	E2 / E3	0.128 [3.24]	0.120 [3.04]	0.154 [3.92]	0.394 [10.0]
	E4 / E6	0.301 [7.64]	0.120 [3.04]	0.154 [3.92]	0.394 [10.0]
	3E	0.482 [12.24]	0.120 [3.04]	0.154 [3.92]	0.394 [10.0]
	6E	0.482 [12.24]	0.120 [3.04]	0.154 [3.92]	0.394 [10.0]
20021	EE	0.209 [5.30]	0.098 [2.50]	0.169 [4.30]	0.366 [9.30]

For technical questions, contact: polytech@vishay.com
THIS DOCUMENT IS SUBJECT TO CHANGE WITHOUT NOTICE. THE PRODUCTS DESCRIBED HEREIN AND THIS DOCUMENT ARE SUBJECT TO SPECIFIC DISCLAIMERS, SET FORTH AT www.vishay.com/doc?91000

HERMETICALLY SEALED CAPACITOR T27 TYPE

PAD DIMENSIONS in inches [millimeters]

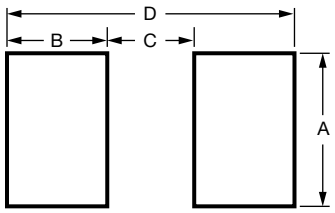

CASE CODE	A (MIN.)	B (NOM.)	C (NOM.)	D (NOM.)
D	0.295 [7.50]	0.138 [3.50]	0.100 [2.50]	0.374 [9.50]

GUIDE TO APPLICATION

1. **AC Ripple Current:** the maximum allowable ripple current shall be determined from the formula:

$$I_{RMS} = \sqrt{\frac{P}{R_{ESR}}}$$

where,

P = power dissipation in W at +45 °C as given in the tables in the product datasheets.

R_{ESR} = the capacitor equivalent series resistance at the specified frequency.

2. **AC Ripple Voltage:** the maximum allowable ripple voltage shall be determined from the formula:

$$V_{RMS} = Z\sqrt{\frac{P}{R_{ESR}}}$$

or, from the formula:

$$V_{RMS} = I_{RMS} \times Z$$

where,

P = power dissipation in W at +45 °C as given in the tables in the product datasheets.

R_{ESR} = The capacitor equivalent series resistance at the specified frequency.

Z = The capacitor impedance at the specified frequency.

2.1 The tantalum capacitors must be used in such a condition that the sum of the working voltage and ripple voltage peak values does not exceed the rated voltage as shown in figure below.

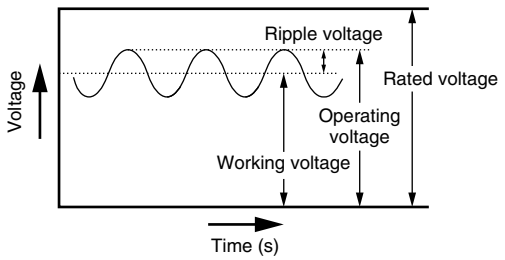

3. **Temperature Derating:** power dissipation is affected by the heat sinking capability of the mounting surface. If these capacitors are to be operated at temperatures above +45 °C, the permissible ripple current (or voltage) shall be calculated using the derating coefficient as shown in the table below:

MAXIMUM RIPPLE CURRENT TEMPERATURE DERATING FACTOR	
≤ 45 °C	1.0
55 °C	0.8
85 °C	0.6
105 °C	0.4
125 °C	0.25

4. **Reverse Voltage:** the capacitors are not intended for use with reverse voltage applied. However, they are capable of withstanding momentary reverse voltage peaks, which must not exceed the following values:

At 25 °C: 10 % of the rated voltage or 1 V, whichever is smaller.

At 85 °C: 5 % of the rated voltage or 0.5 V, whichever is smaller.

At 105 °C: 3 % of the rated voltage or 0.3 V, whichever is smaller.

5. **Mounting Precautions:**

5.1 **Soldering:** capacitors can be attached by conventional soldering techniques; vapor phase, convection reflow, infrared reflow, wave soldering, and hot plate methods. The soldering profile charts show recommended time / temperature conditions for soldering. Preheating is recommended. The recommended maximum ramp rate is 3 °C per second. Attachment with a soldering iron is not recommended due to the difficulty of controlling temperature and time at temperature. The soldering iron must never come in contact with the capacitor. For details see www.vishay.com/doc?40214.

For technical questions, contact: polytech@vishay.com

THIS DOCUMENT IS SUBJECT TO CHANGE WITHOUT NOTICE. THE PRODUCTS DESCRIBED HEREIN AND THIS DOCUMENT ARE SUBJECT TO SPECIFIC DISCLAIMERS, SET FORTH AT www.vishay.com/doc?91000

5.2 **Limit Pressure on Capacitor Installation with Mounter:** pressure must not exceed 4.9 N with a tool end diameter of 1.5 mm when applied to the capacitors using an absorber, centering tweezers, or similar (maximum permitted pressurization time: 5 s). An excessively low absorber setting position would result in not only the application of undue force to the capacitors but capacitor and other component scattering, circuit board wiring breakage, and / or cracking as well, particularly when the capacitors are mounted together with other chips having a height of 1 mm or less.

5.3 **Flux Selection**

5.3.1 Select a flux that contains a minimum of chlorine and amine.

5.3.2 After flux use, the chlorine and amine in the flux remain must be removed.

5.4 **Cleaning After Mounting:** the following solvents are usable when cleaning the capacitors after mounting. Never use a highly active solvent.

- Halogen organic solvent (HCFC225, etc.)
- Alcoholic solvent (IPA, ethanol, etc.)
- Petroleum solvent, alkali saponifying agent, water, etc.

Circuit board cleaning must be conducted at a temperature of not higher than 50 °C and for an immersion time of not longer than 30 minutes. When an ultrasonic cleaning method is used, cleaning must be conducted at a frequency of 48 kHz or lower, at an vibrator output of 0.02 W/cm^3, at a temperature of not higher than 40 °C, and for a time of 5 minutes or shorter.

Notes

- Care must be exercised in cleaning process so that the mounted capacitor will not come into contact with any cleaned object or the like or will not get rubbed by a stiff brush or similar. If such precautions are not taken particularly when the ultrasonic cleaning method is employed, terminal breakage may occur
- When performing ultrasonic cleaning under conditions other than stated above, conduct adequate advance checkout

For technical questions, contact: polytech@vishay.com
THIS DOCUMENT IS SUBJECT TO CHANGE WITHOUT NOTICE. THE PRODUCTS DESCRIBED HEREIN AND THIS DOCUMENT ARE SUBJECT TO SPECIFIC DISCLAIMERS, SET FORTH AT www.vishay.com/doc?91000

Disclaimer

ALL PRODUCT, PRODUCT SPECIFICATIONS AND DATA ARE SUBJECT TO CHANGE WITHOUT NOTICE TO IMPROVE RELIABILITY, FUNCTION OR DESIGN OR OTHERWISE.

Vishay Intertechnology, Inc., its affiliates, agents, and employees, and all persons acting on its or their behalf (collectively, “Vishay”), disclaim any and all liability for any errors, inaccuracies or incompleteness contained in any datasheet or in any other disclosure relating to any product.

Vishay makes no warranty, representation or guarantee regarding the suitability of the products for any particular purpose or the continuing production of any product. To the maximum extent permitted by applicable law, Vishay disclaims (i) any and all liability arising out of the application or use of any product, (ii) any and all liability, including without limitation special, consequential or incidental damages, and (iii) any and all implied warranties, including warranties of fitness for particular purpose, non-infringement and merchantability.

Statements regarding the suitability of products for certain types of applications are based on Vishay's knowledge of typical requirements that are often placed on Vishay products in generic applications. Such statements are not binding statements about the suitability of products for a particular application. It is the customer's responsibility to validate that a particular product with the properties described in the product specification is suitable for use in a particular application. Parameters provided in datasheets and / or specifications may vary in different applications and performance may vary over time. All operating parameters, including typical parameters, must be validated for each customer application by the customer's technical experts. Product specifications do not expand or otherwise modify Vishay's terms and conditions of purchase, including but not limited to the warranty expressed therein.

Hyperlinks included in this datasheet may direct users to third-party websites. These links are provided as a convenience and for informational purposes only. Inclusion of these hyperlinks does not constitute an endorsement or an approval by Vishay of any of the products, services or opinions of the corporation, organization or individual associated with the third-party website. Vishay disclaims any and all liability and bears no responsibility for the accuracy, legality or content of the third-party website or for that of subsequent links.

Except as expressly indicated in writing, Vishay products are not designed for use in medical, life-saving, or life-sustaining applications or for any other application in which the failure of the Vishay product could result in personal injury or death. Customers using or selling Vishay products not expressly indicated for use in such applications do so at their own risk. Please contact authorized Vishay personnel to obtain written terms and conditions regarding products designed for such applications.

No license, express or implied, by estoppel or otherwise, to any intellectual property rights is granted by this document or by any conduct of Vishay. Product names and markings noted herein may be trademarks of their respective owners.

© 2024 VISHAY INTERTECHNOLOGY, INC. ALL RIGHTS RESERVED

Looking for pricing, stock, or lifecycle information?

Click below to explore more details on WIN SOURCE:

- View T59EE226M050C0100 on WIN SOURCE
- Vishay Information

Optimize Your Supply Chain with WIN SOURCE Solutions

- Global Sourcing Solution
- Obsolete Management
- Cost Control Management
- Shortage Management
- Alternative Solution
- Excess Inventory Management